Lenovo ThinkStation P8

Storage Configurator

Table of Contents

Overview

ThinkStation P8 is a single processor professional workstation powered by the latest generation AMD Ryzen Threadripper PRO WX-Series processors.

P8 currently sits between P7 and PX not only numerically but in terms of features, from onboard wi-fi to total processor core count to the storage options offered. P8 utilizes the 39L tower chassis of P7 added to the Lenovo workstation portfolio in the previous spring of 2023. P8 offers multiple different storage options from M.2 NVMe SSD, 2.5” U.3 SSD to legacy 3.5” SATA drives for bulk & archive storage.

P8 also supports two different qualified storage add-in-cards, abbreviated to AIC throughout this document. ThinkStation Quad M.2 SSD PCIe AIC and ThinkStation Single U.2 / U.3 SSD PCIe AIC.

Integrated SATA, U.3 and NVMe RAID 0/1/10/5 is natively supported on P8 without the need for a key or dongle and configured via the RAIDXpert2 Configuration Utility from within the BIOS. Details can be found in Section 5

This document will focus on the storage subsystem of P8 and provides configuration guidance for an optimal storage solution to support the desired business workflow.

As more storage options are qualified this document will be updated to reflect these options so should be returned to in future.

Section 1 – P8 Storage Summary

The tables below give a quick overview of the type, capacity, and quantity of storage devices supported on P8. Totals will include a mixture of the feasible options to achieve the desired solution.

At launch Lenovo have not qualified concurrently spanning a single RAID volume between onboard, Front Access FLEX Bay and 3.5” storage bays, therefore the largest qualified quantity of drives in a single nonredundant array is 4.

A mixture of the following types and quantities is supported as some combinations are mutually exclusive.

Table 1 – P8 Supported Storage Types

Drive Type	P8 Supported Drive Capacities
M.2 NVMe SSD	Up to 4TB
2.5” U.3 SSD	Up to 15.3TB
3.5" SATA HDD	Up to 12TB

Table 2 - Storage Location Summary

Storage Location	Drive Type Supported
Internal onboard M.2 storage slots	3 x M.2 SSD Gen5 (CPU)
Single U.2 / U.3 SSD PCIe AIC	1 x U.2 / U.3 Gen4 SSD per adapter [1]
Quad M.2 SSD PCIe AIC – Gen4 or Gen5	4 x M.2 SSD Gen4/5 SSD per adapter [1,2]
Front access FLEX bay	1 x M.2 SSD Gen4 (CPU)
**Note: Not qualified as a single spanned volume across other NVMe bays!*	
Internal 3.5” bays 1 & 2	*One of the following options:* 2 x 3.5” SATA3 4 x M.2 SSD Gen 4 2 x 2.5” U.3 SSD (U.2/U.3)
Internal 3.5” bay 3	1 x 3.5” SATA3

[1] Single U.2 / U.3 SSD PCIe AIC and Quad M.2 SSD PCIe AIC are not simultaneously supported.
[2] Supported drive type is dependent on Gen4 or Gen5 adapter version in use.

Table 3 – Total Quantity and Capacity by Drive Type, not all possible at the same time!

Drive Type	Total Drive Quantity	Total RAW Storage
M.2 NVMe SSD – Gen4/5	16	Up to 64TB [3]
2.5” U.3 SSD	4	Up to 61.2TB [3]
3.5” SATA Drives	3	Up to 36TB [3]

[3] Totals will reflect maximum capacities of individual components and locations. Check Table 2 for details.

Section 2 – P8 M.2 NVMe SSD Details

The P8 platform supports a variety of different M.2 NVMe SSD storage options. The two tables below give details on the features, compatibility, and required parts for M.2 NVMe SSD support.

Table 4 – M.2 PCIe NVMe features.

Feature	Onboard M.2 slots	FLEX bay M.2 kit	Internal bays M.2 kit	Quad M.2 PCIe SSD AIC (x2)
Drive Count (System max = 16)	3	1	4	Up to 8
Maximum PCIe speed	Gen5	Gen4	Gen4	Gen4/5
Availability	**Standard**	Optional	Optional	Optional
Location	Motherboard	Front Access FLEX bay	Internal 3.5” bays 1&2	PCIe Slot 2 x AIC Qualified
Controller	CPU	CPU	CPU	CPU
Supported M.2 dimensions (mm)	2280 / 22110	2280	2280	2242, 2260, 2280, 22110
Double side support	Yes	Yes	Yes	Yes
Maximum power per drive	10W [5]	8W	8W	10W [5]
Front accessible	No	Yes	No	No
Toolless	Yes	Yes	No [4]	Yes
Hot swappable	No	Yes	No	No
Combined in system activity LED	Yes	Yes	Yes	Yes

Note: Although capable, no 22110 drives are qualified at the present time.

[4] A screwdriver is required to install the M.2 kit in the system, but trays can be installed and removed without tools. Needle nose pilers are also required to release the tray heatsink for M.2 installation.
[5] 10W Gen5 Drives require a 10W Gen5 Heatsink or Gen5 Adapter.

Table 5 – M.2 compatibility and required parts.

Location	Compatibility	Requirements and parts
1st & 2nd Onboard Slots	• **Supplied as Standard**	• M.2 Carrier and Heatsink Kit
3rd Onboard Slot	• **Supplied as Standard***	• A Unique Heatsink to slot 1 & 2
Front Access FLEX bay M.2 Kit	• Cannot co-exist with Media Card Reader	• Front storage tray • M.2 storage access box for front storage bay (not toolless) • FLEX bay fan
Internal 3.5” bays M.2 kit	• Not compatible with Internal 3.5” bays standard SATA HDD’s	• HDD bay for NVMe SSD kit (includes trays and PCIe cables) • Internal Bay Fan
Quad M.2 SSD PCIe AIC	• Requires available x16 slot. • Not compatible with U.3 AIC	• Quad M.2 SSD PCIe AIC · Gen4 or Gen5 Available

* In specific circumstances the 3rd onboard slot may be unavailable.

Onboard M.2 NVMe SSD Installation:

There are two onboard M.2 NVMe slots at the top front of the motherboard and one at the bottom front of the motherboard as illustrated:

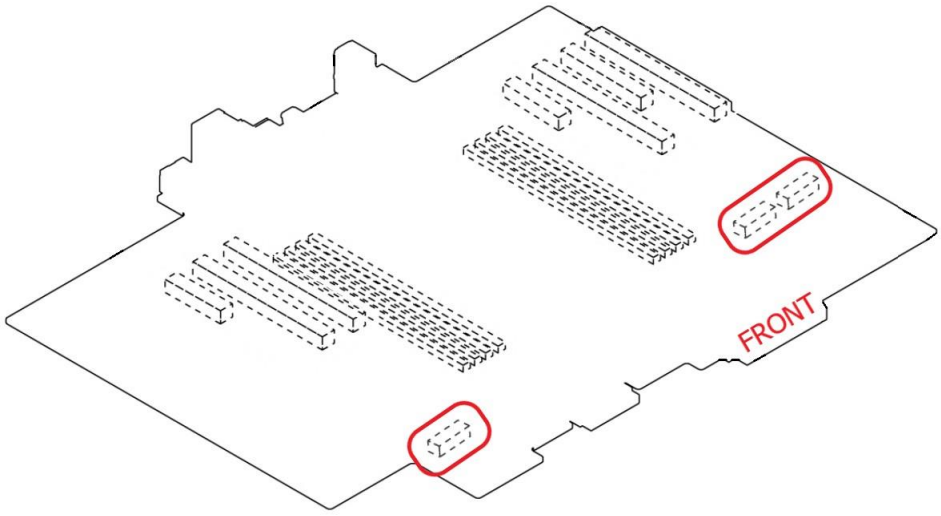

There is a diagram and legend on the inside cover of the system, also depicting where these are located plus other ports and connectors referred too throughout this document.

System cover motherboard diagram.

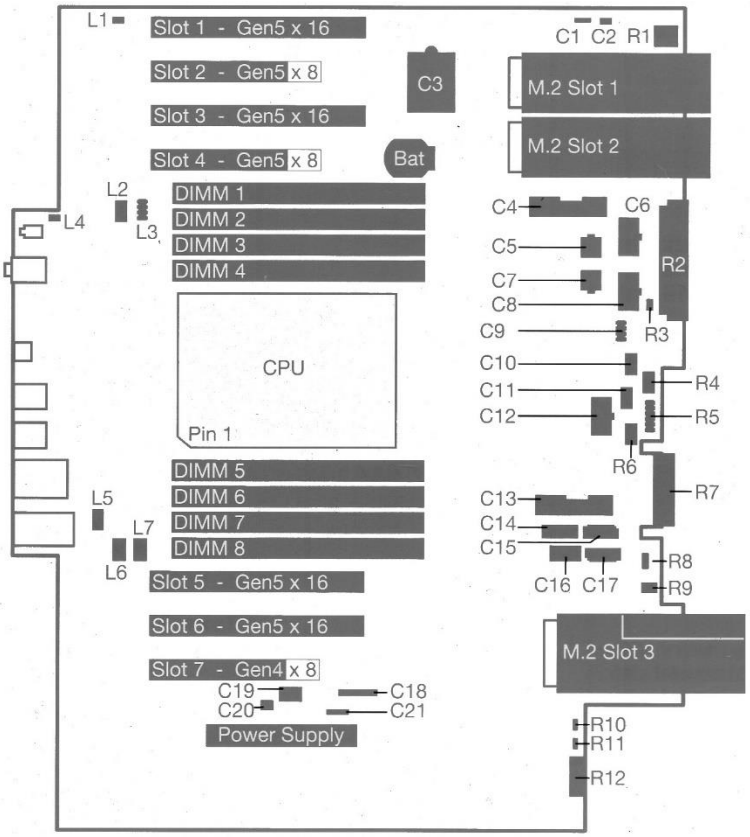

Remove any GPU's or add-In-controllers that may obstruct access to the M.2 SSD motherboard slots.

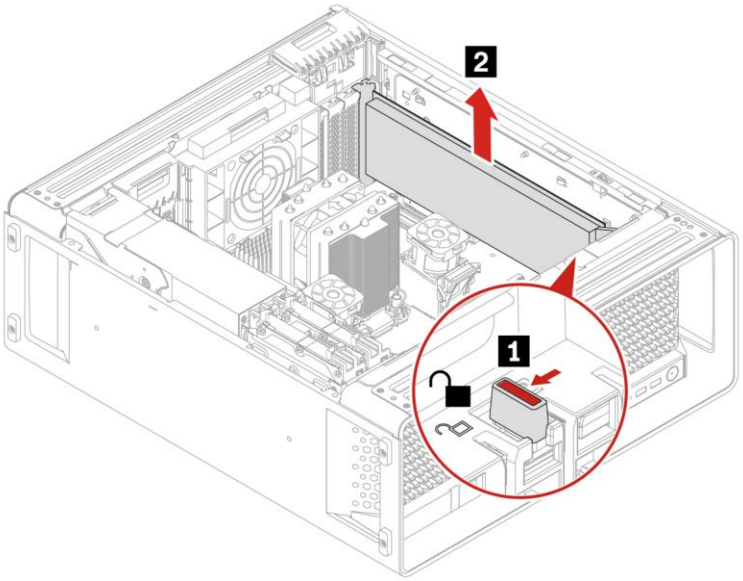

Unlock the red retaining latch that secures the M.2 SSD carrier and heatsink to the motherboard (1) and gently lift clear (2) caution: at no more than a 20° angle.

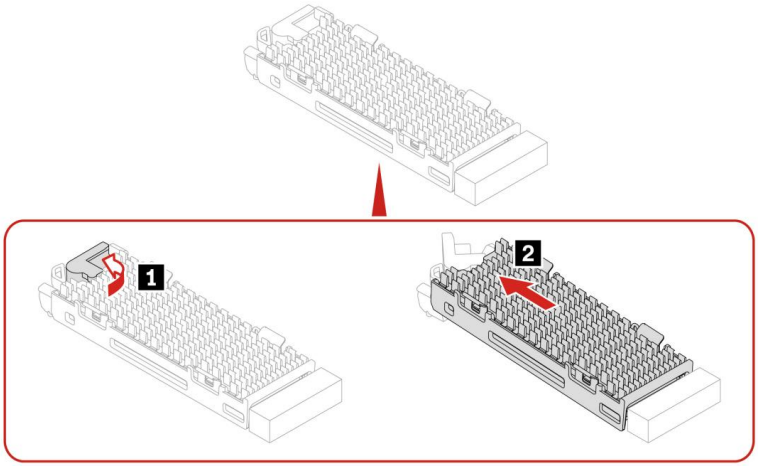

Remove the heatsink (1) & (2) and dummy retaining plastic M.2 SSD (3).

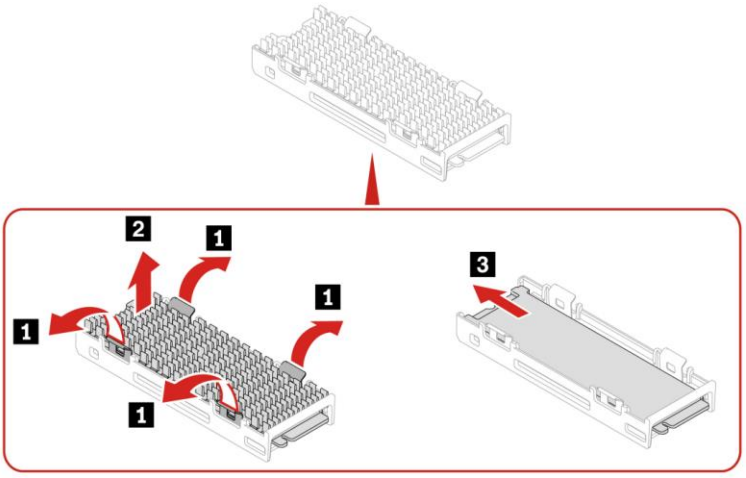

Remove the plastic film coverings from both the upper and lower heatsink that protect the thermal pads. Then gently insert the new M.2 SSD face up, ensuring it is pushed all the way to the end stop.

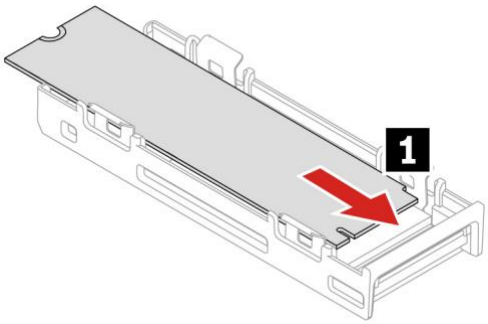

Reattach the heatsink, note the notch in the top of the heatsink should align with the notch in the M.2 SSD. Reinsert the carrier into the desired motherboard slot remembering at no more than a 20° angle.

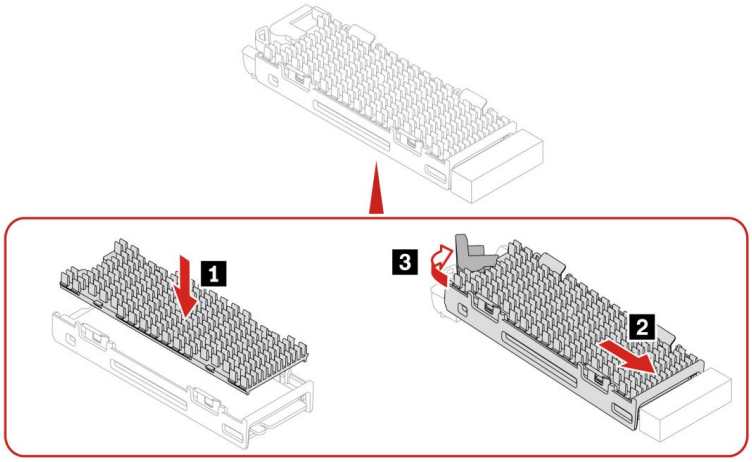

Close the red retaining latch and reinstall any GPU's or add-in-controllers removed previously.

Note: the lower 3rd M.2 SSD carrier has a slightly different heatsink, but the process remains the same.

Gen5 10W Heatsink

A Gen5 heatsink assembly is required when using a Gen5 drive. This heatsink is longer than the standard 2280 Gen4 heatsink and is required for optimal Gen5 performance. Refer to the appendix section for a visual representation of the two heatsinks.

Depending on the drive and heatsink combination in use it may be necessary to move the drive carrier retaining clip.

Gently push these lugs inwards and slide the clip towards the system board.

NB: *3rd M.2 system board drive bracket depicted.*

Once free, relocate to the corresponding hole at the front of the bracket,

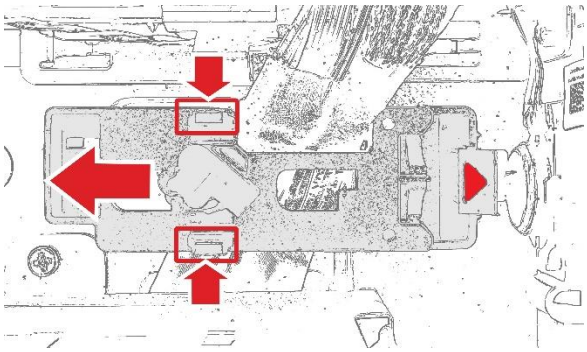

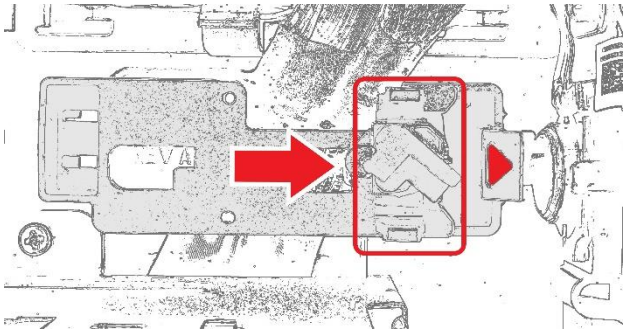

Insert the retaining clip into the free hole on the bracket towards the front of the chassis,

Reverse these steps when going from Gen5 heatsink to Gen4 heatsink assembly.

Successful installation can be confirmed in the system BIOS under System Summary, “M.2 SSD Slot 1, 2 & 3”.

FLEX Bay M.2 NVMe SSD Installation:

Like P5 & P7, P8 supports a front removable M.2 SDD as an option. The M.2 SSD is installed in a flex bay carrier and this in turn installs into a flex bay slot.

The flex bay slot or frame is also removable but is only interchangeable with a media-card-reader, also available as an option. They cannot co-exist, so if the media-card-reader is installed this will need removing first.

Disconnect the internal USB cable (C16), then press internal clip (1) and remove the card reader (2)

(C16) on the system cover diagram, page 7.

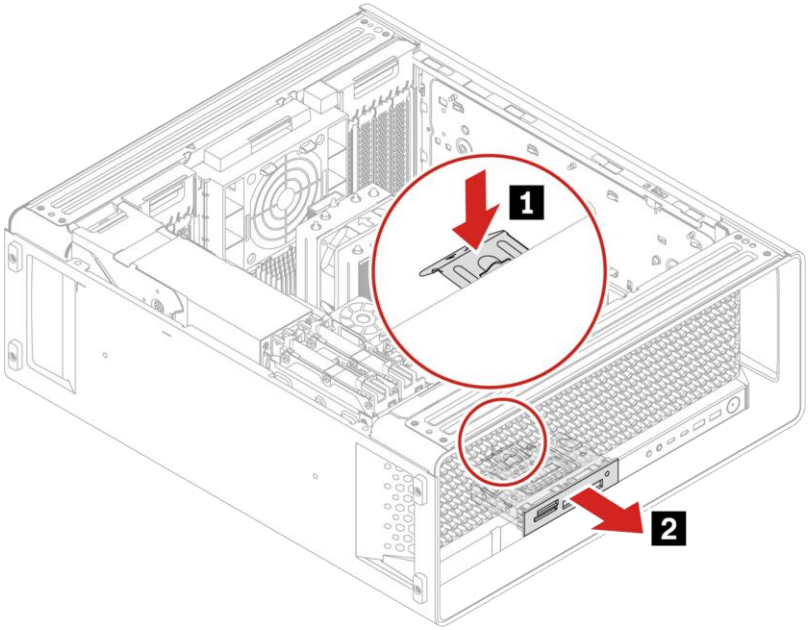

Then the flex bay frame can be inserted. No cabling is required as it plugs directly into a motherboard via an edge connector, there should be an audible ‘click’ and the frame should be flush with the front bezel.

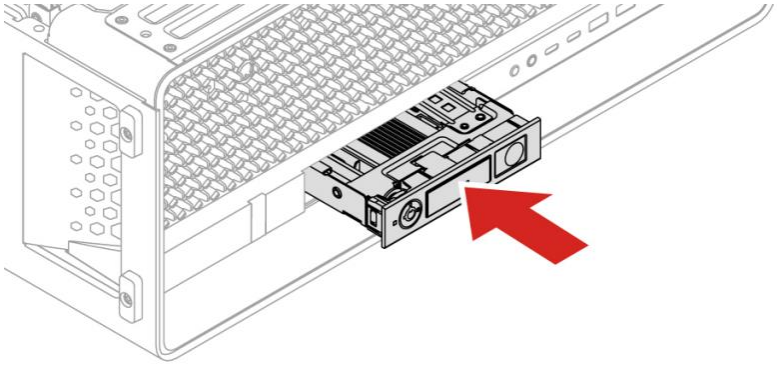

While the system cover is open, the flex bay fan can be installed and connected to the flex_bay_fan pin-header on the motherboard. It is keyed and colored white to match the plug on the fan.

(C10) on the system cover diagram, page 7.

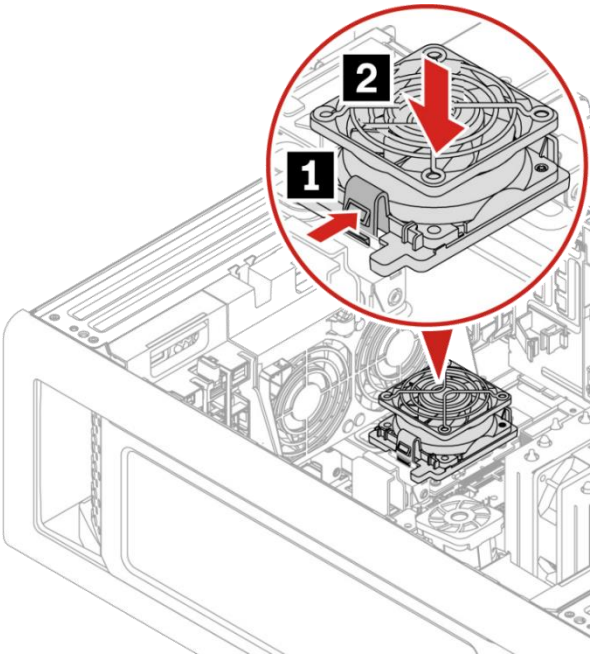

To remove the flex bay carrier, ensure the lock is in the unlock position (1) and then press the button (2) remove flex bay carrier (3).

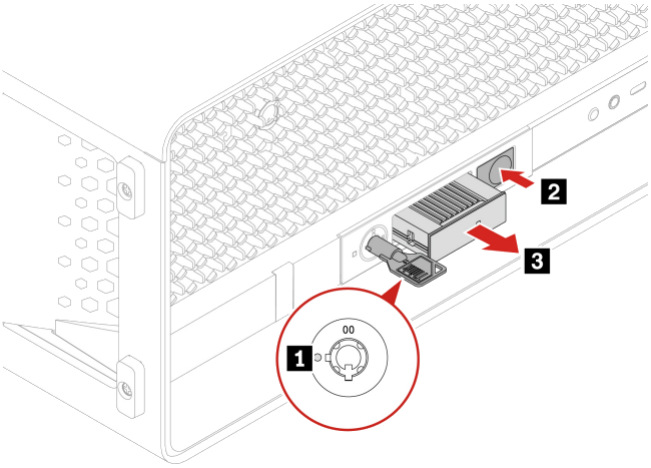

Open the flex bay carrier by removing the two small retaining screws (1) and remove the cover (2),

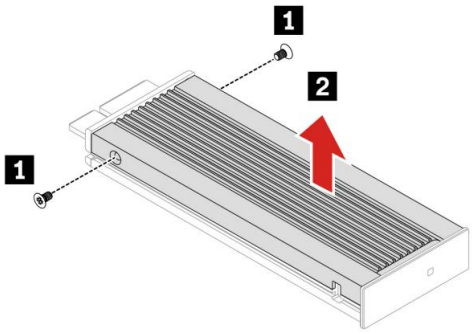

Remove the plastic film coverings that protect the thermal pads and retaining screw (3), and gently insert the new M.2 SSD drive face up (4). Reinstall the retaining screw (3).

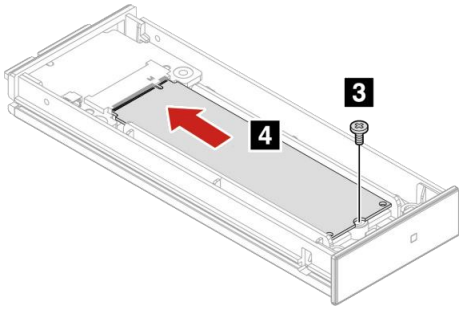

Replace the cover and the two retaining screws. Reinsert the flex bay carrier into the flex bay slot, locking with the key if desired.

Successful installation can be confirmed in the system BIOS under System Summary, “Front NVMe Storage” and “Flex Bay Fan”.

Internal 3.5” Bay M.2 SSD Installation:

Like P7, P8 can support M.2 SSDs in the 3.5” HDD bays. However new to P8 is an extra PCIe cable, and no backplane PCB so can support four M.2 SSDs rather than the two supported in P7. Furthermore, we have two onboard MPIO PCIe cable connectors so they can coexist with the front Flex Bay M.2 SSD option.

Caution: A medium sized crosshead magnetic screwdriver is required.
Care must be taken not to slip and scratch the motherboard or lose a screw.

To install the 3.5” M.2 SSD kit, fist remove the side cover and front fan 1 & 2 assembly, if installed. Observe the power plug location, they are color coded and keyed.

(C9) on the system cover diagram, page 7.

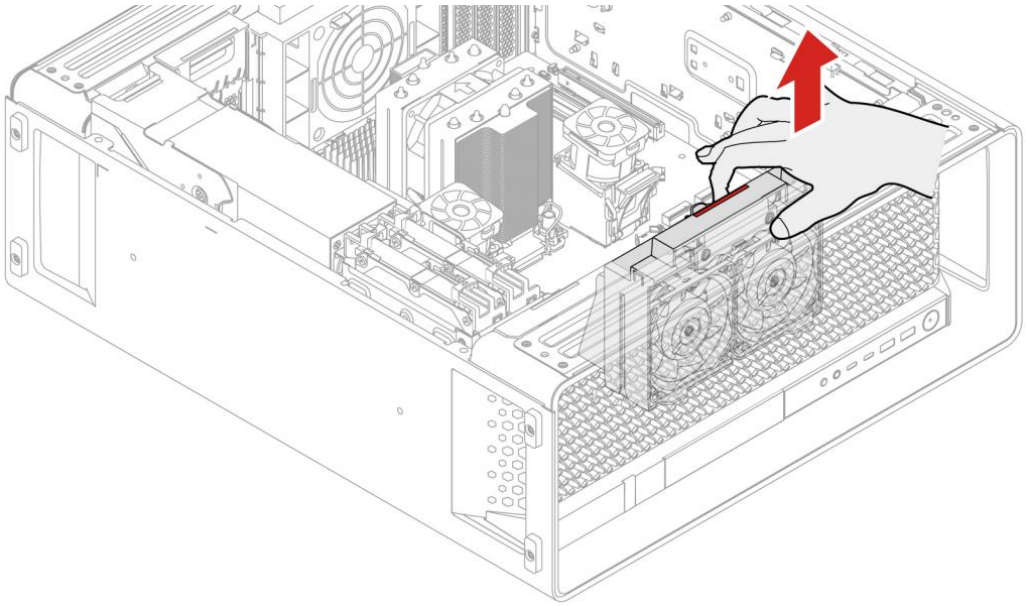

Remove the ‘Bottom System Fan & Internal Bay Fan’ assembly if installed. Observe the power plug location, they are color coded and keyed.

(C11 & R4) on the system cover diagram, page 7.

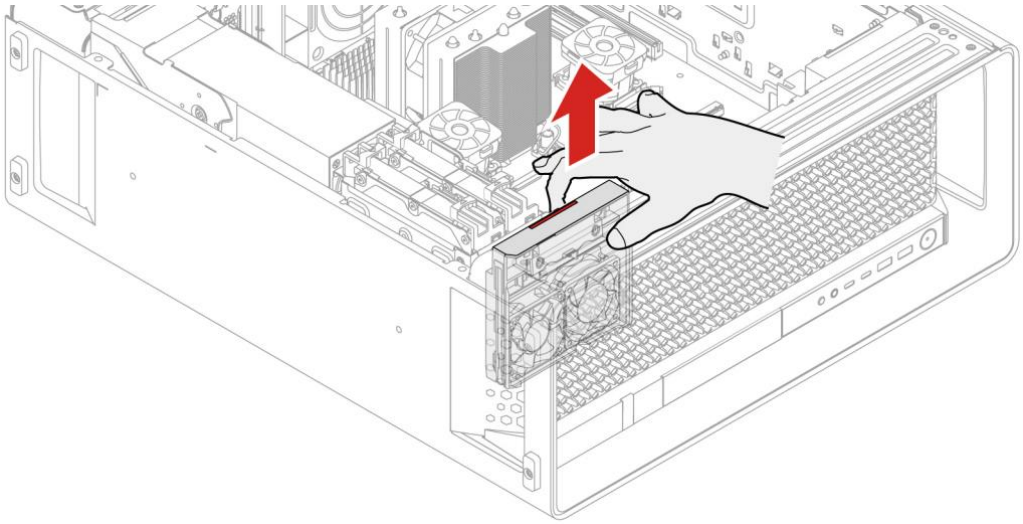

Remove the 3rd (lower) onboard M.2 NVMe SSD carrier as described above in the ‘onboard M.2 NVMe SSD installation’ section followed by the 3.5” SATA HDD trays supplied with all P8 systems.

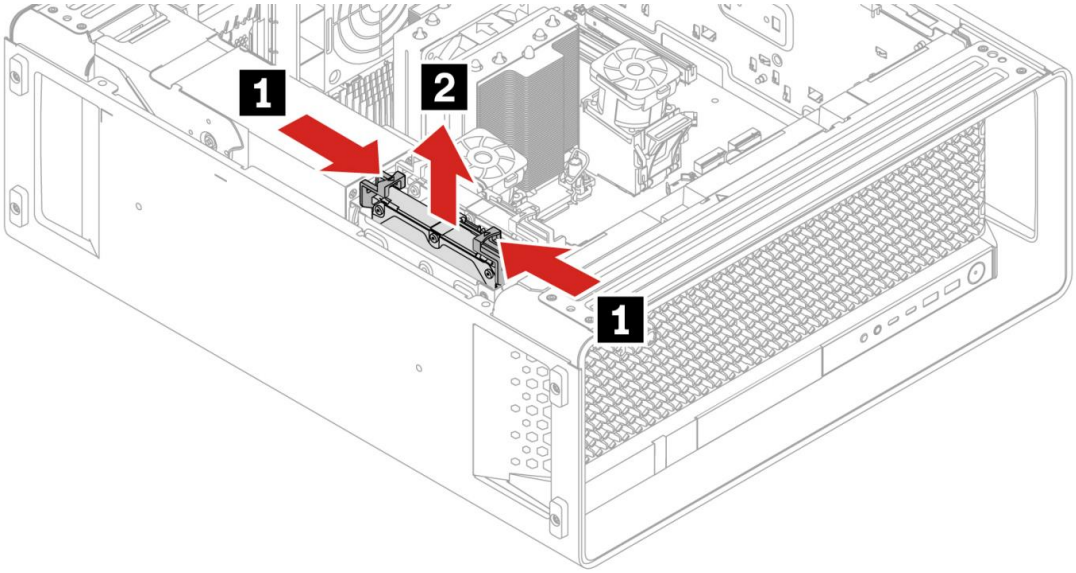

The supplied SATA data cable and dual drop SATA power cable can also be removed at this point as these will no longer be required. 3.5” SATA HDD installation is no longer possible once the 3.5” M.2/U.3 NVMe bay kit has been installed.

(C5 & C14) on the system cover diagram, page 7.

Remove the 3.5” Internal Bay chassis bracket by first removing the two screws indicated, it should then lift out easily.

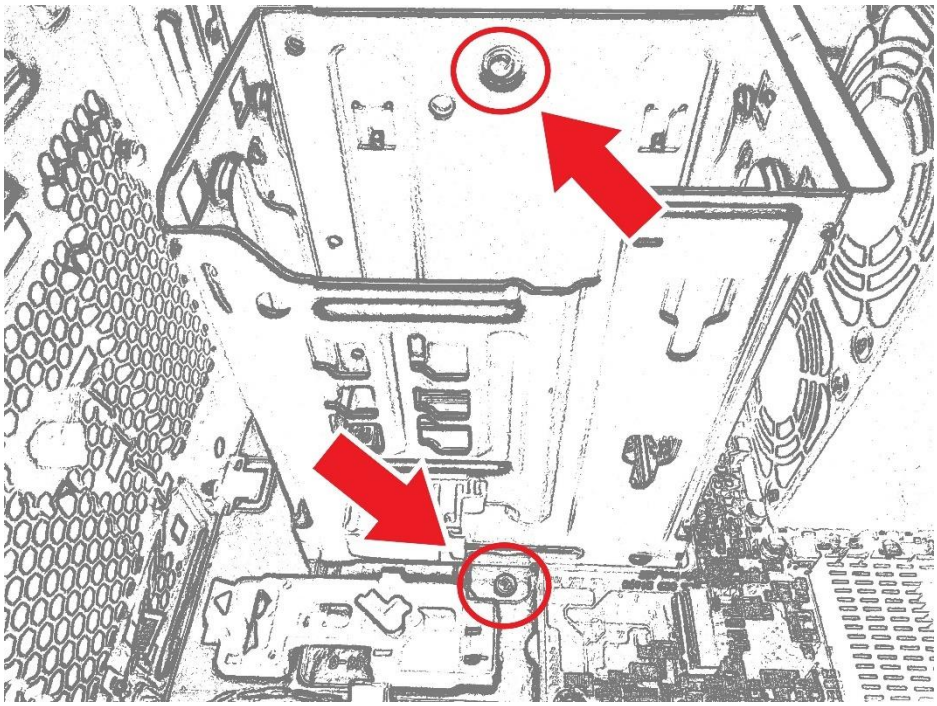

Remove the lower onboard M.2 SSD black chassis clip (3rd M.2 SSD) by pressing firmly with your thumb on the red arrow depicted, forward towards the front of the system, then in an upwards motion. The clip should then pop out.

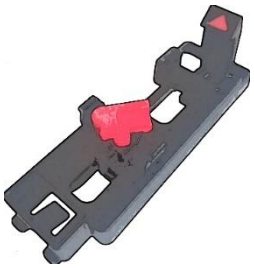

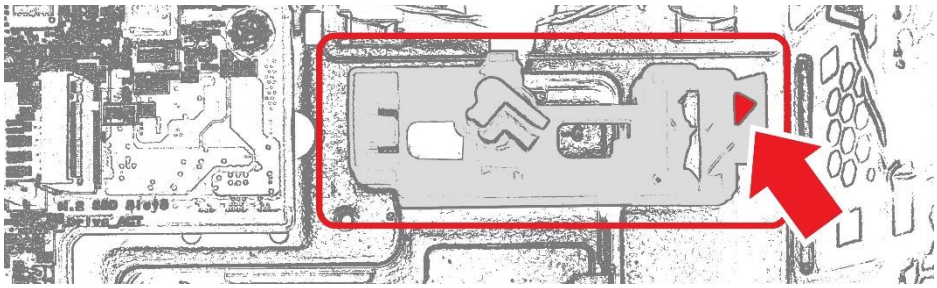

Once the M.2 SSD clip is removed attach the two PCIe cables supplied with the 3.5” Bay M.2 SSD kit to the Internal Bay backplate using the black screws provided. The connectors go on the front of the plate but the cables route from behind.

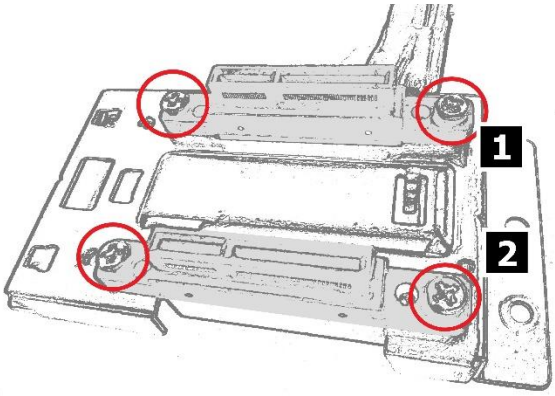

The connectors are keyed, so their orientation is assured. Also note the bay numbers 1 & 2 etched into the metal.

(1) Install the Internal Bay backplate with the silver screws provided.
(2) Gently clamp down the cables with the M.2 SSD chassis clip but don't crush or pinch them, the cables are routed **underneath** the M.2 SSD bracket.
(3) Route the cables through the cable management provided.
(4) Plug in bay 1 PCIe cable.
(5) Plug in bay 2 PCIe cable.

(C4 & C13) on the system cover diagram, page 7.

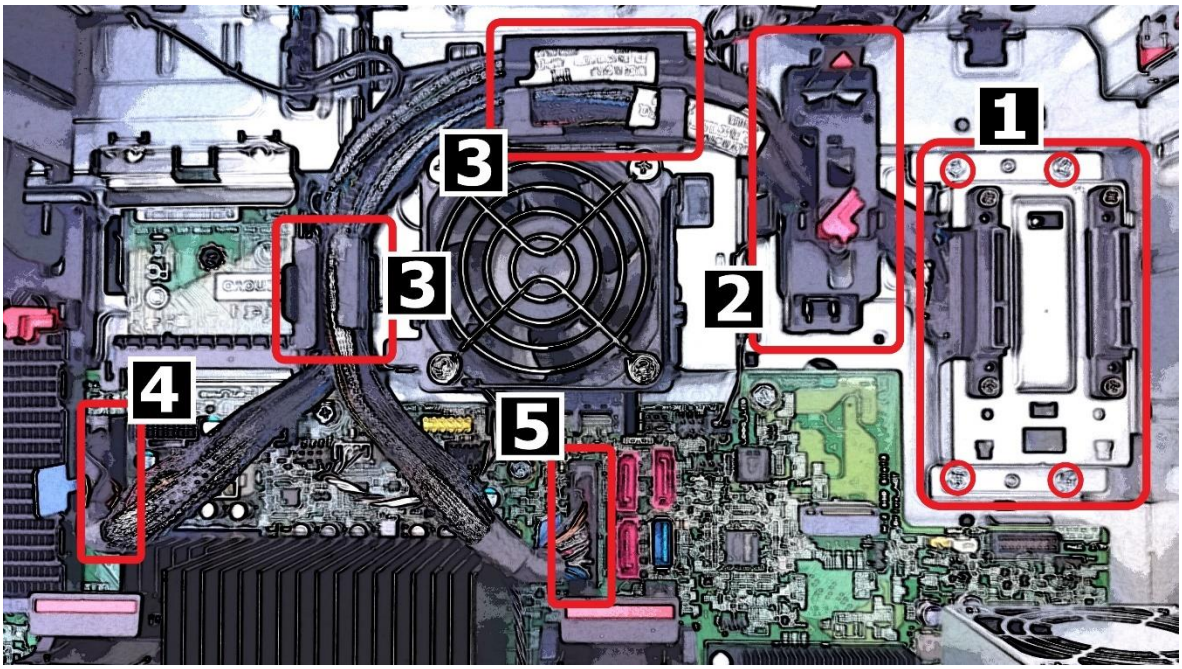

Reinstall **all** the components removed previously starting with the 3.5" chassis bracket including the two screws. If the Internal Bay Fan was not supplied with the system, now is the time to install one. The Internal Bay Fan has a brown connector.

(R4) on the system cover diagram on page 7.

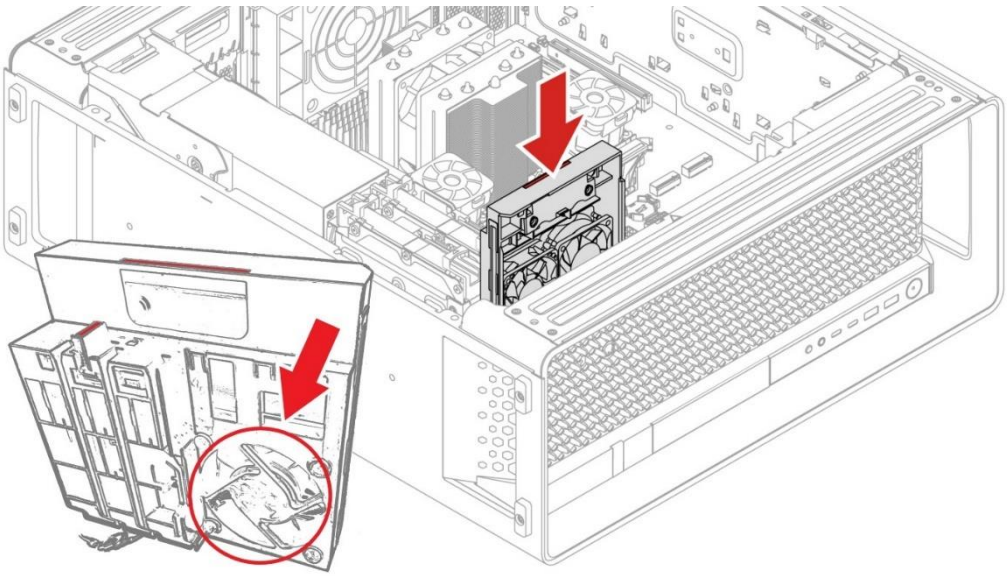

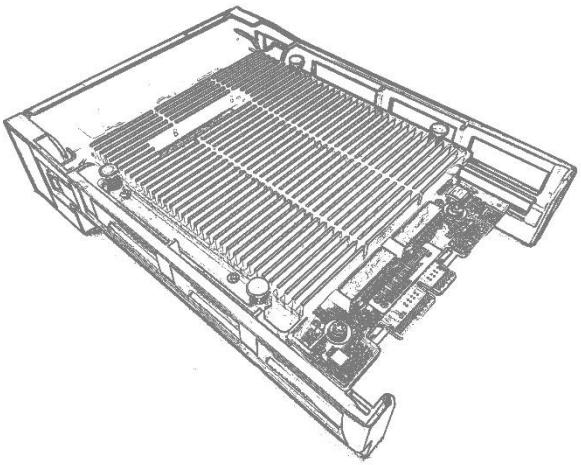

Locate the 3.5” M.2 SSD carriers/trays provided in the kit,

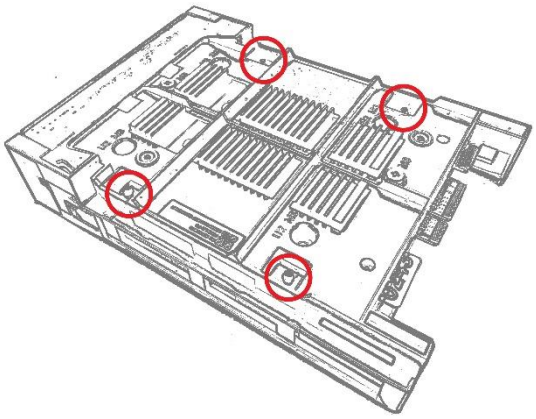

Turn the carrier over to reveal the underside. Gently pinch each peg as indicated with a pair of pliers, do NOT use cutters, the heatsink should come free.

Turn over again and remove any plastic film coverings protecting the thermal pads.

Gently insert and lower the desired M.2 NVMe SSDs into the slots on the interposer board.

Install the plastic retaining pegs that came with each tray into the hole at the end of each SSD.

Reinstall the heatsink.

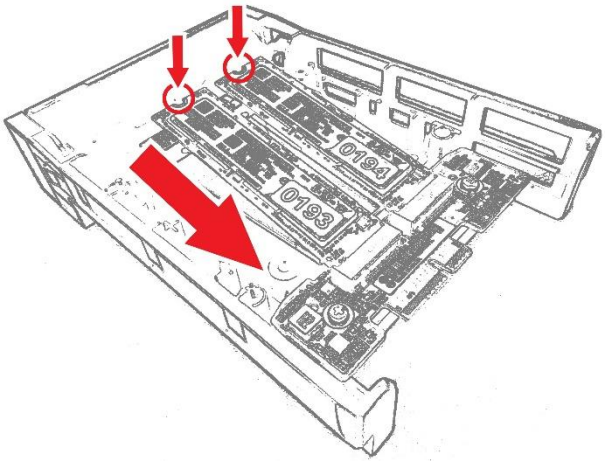

Install the carriers into the 3.5” Internal bays, then close the chassis lid.

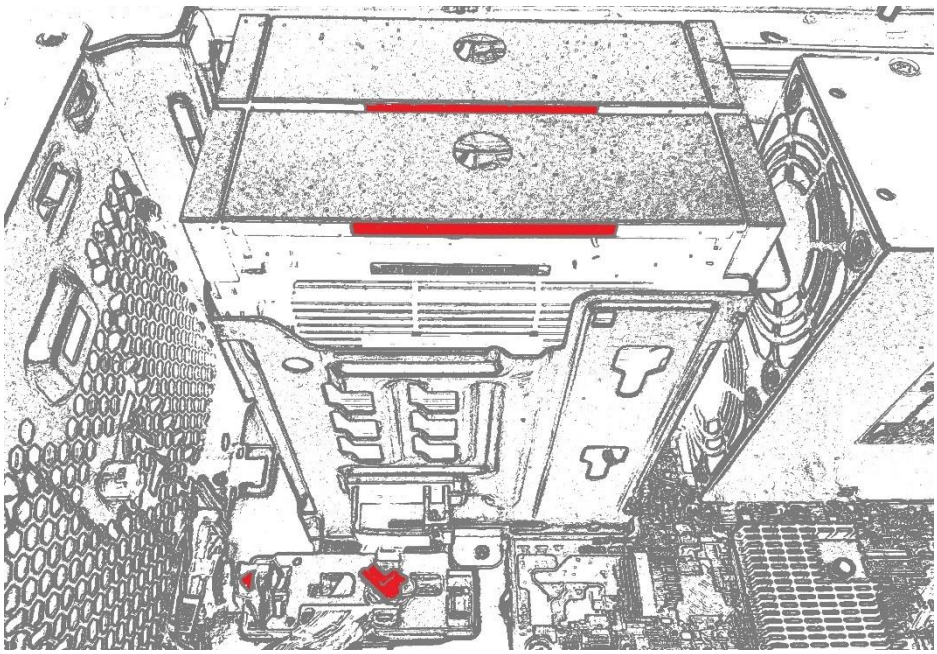

Successful installation can be confirmed in the system BIOS under System Summary, “Internal Bay Slot 1-1, 1-2, 2-1 & 2-2 and Internal Bay Fan”.

Quad M.2 SSD PCIe AIC – Gen4 or Gen5

It is possible to add (8) additional M.2 drives to P8 using up to (2x) optional PCIe based Quad-port M.2 add-in-cards. The Gen4 adapter will only support Gen4 drives, the Gen5 adapter will support both Gen4 & Gen5 drives. See the Appendix at the end of this document for additional information and images of parts.

Install M.2 solid-state drives in the following order as shown:

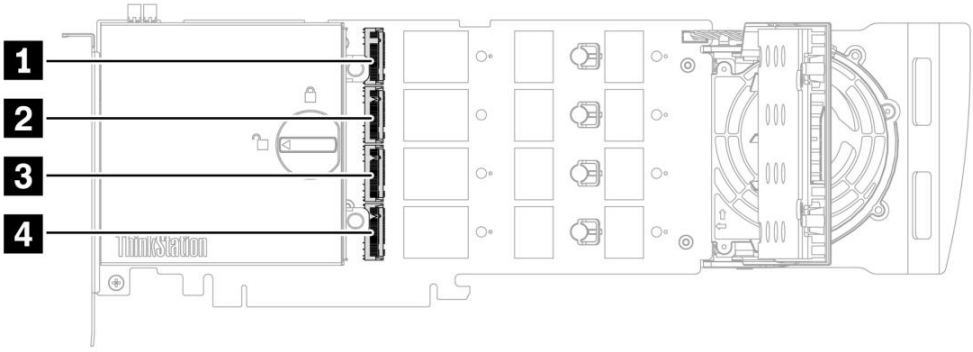

Drive installation steps:

Rotate the lock to the open position to open the cover (1) and open the door (2).

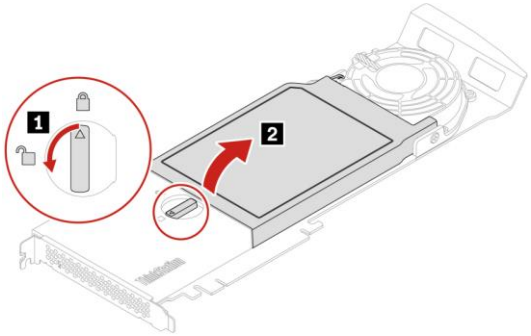

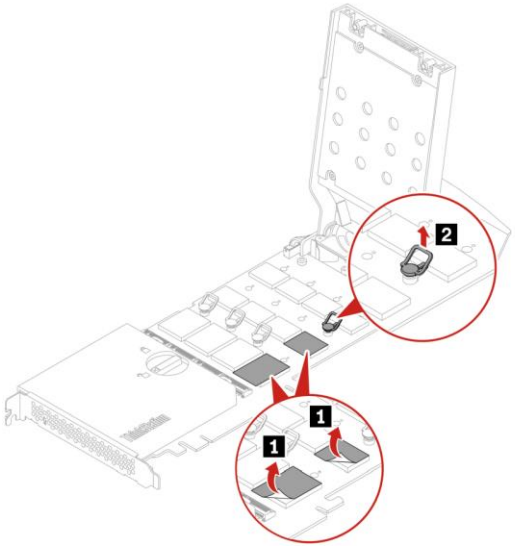

Remove the film on the thermal pad on which you want to install the M.2 solid-state drive (1).

Pull the handle of the retention latch outward to the open position once it has been moved to the appropriate location to suit the length of the new M.2 SSD (2).

Install the M.2 solid-state drive (1). Then, insert the plug of the retention latch into the hole to secure the new drive (2).

Do not touch the circuit board of the M.2 solid-state drive as they are sensitive.

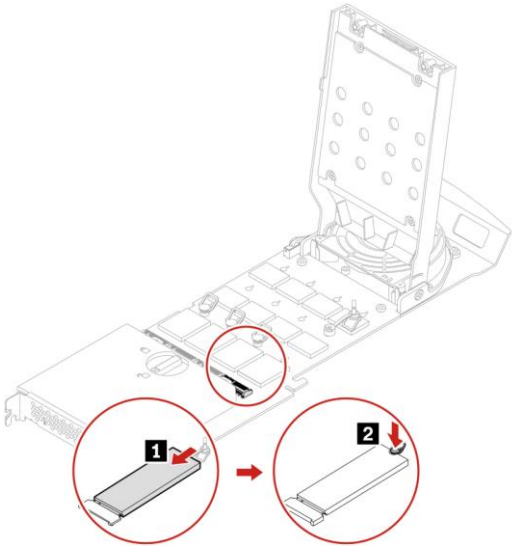

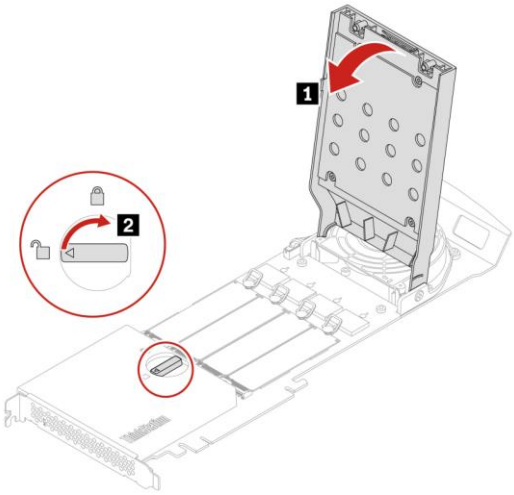

Close the door (1) Rotate the lock to the close position to secure the cover (2).

Install the Quad M.2 SSD PCIe AIC in a PCIe x16 card slot on the system board. See “Motherboard diagram” on page 7.

Successful installation can be confirmed in the system BIOS under System Summary,

Section 3 – P8 U.3 SSD Supported Options

P8 supports U.3 SSDs. U.3 drives are like traditional 2.5” laptop HDDs in **appearance only**, with an integrated heatsink. From a performance and technology perspective they are more like M.2 NVMe drives, supporting larger capacities.

Table 6 – U.3 PCIe NVMe features.

Feature	Single U.2 / U.3 SSD PCIe AIC (x2)	Internal 3.5” Bays with U.2/U.3 trays
Drive Count (System max = 4)	Up to 2	Up to 2
Maximum PCIe speed	Gen4	Gen4
Availability	Optional	Optional
Location	Motherboard PCIe Slots	Internal 3.5” bays
Controller	CPU	CPU
Maximum power per drive	17W	17W
Toolless	No [4]	No [4]
Hot swappable	No	No
Combined in system activity LED	Yes	Yes

[4] A screwdriver is required to secure the drive in the U.3 SSD PCIe AIC as well as install the 3.5” U.3 kit in the system and to mount the U.2/U.3 drive into the tray, but then the AIC or U.2/U.3 trays can be installed and removed without tools.

Table 7 – U.3 compatibility and required parts.

Location	Compatibility	Requirements and parts
Internal 3.5” bays U.3 kit	• Not compatible with Internal 3.5” bays standard SATA HDD’s	• HDD bay for U.3 SSD kit (includes trays and PCIe cables) • Internal Bay Fan
Single U.2 / U.3 SSD PCIe AIC	• Requires available x16 slot. • Quad M.2 SSD PCIe AIC Mix.	• Single U.2 / U.3 SSD PCIe AIC

Internal 3.5” Bay U.3 SSD Details

P8 supports up to two 2.5” U.3 SSDs, one per 3.5” internal storage bay. The installation of the 3.5” U3 SSD kit and fan is identical to that of the 3.5” M.2 SSD kit, please refer to the instructions above for the most part.

The U.3 carrier tray is however slightly different to the M.2 NVMe SSD carrier tray due to the physical drive dimensions, it also has a different interposer board with it being a different storage technology.

With the U.3/U.2 SSD carrier right way up, carefully insert the U.3 drive into the interposer slot, then turn the carrier over while still holding the drive in-place.

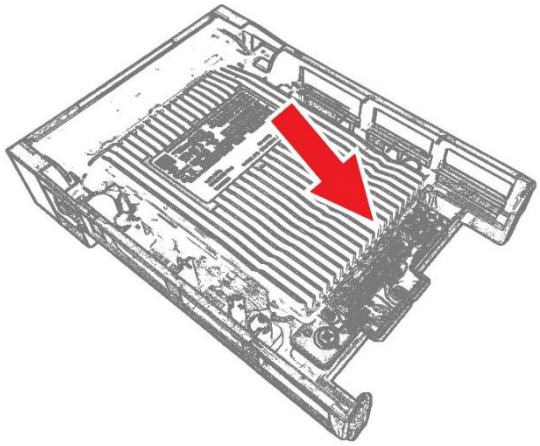

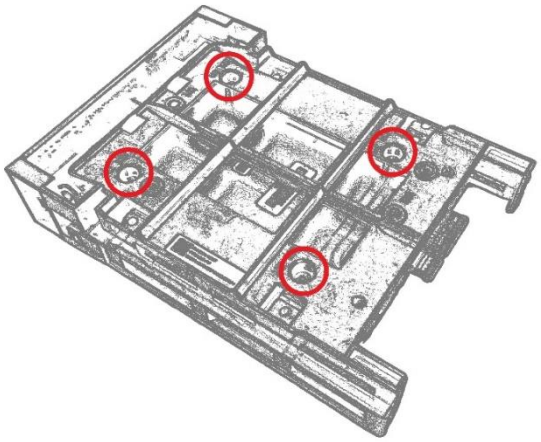

Insert the four screws provided.

Install the carriers into the 3.5” HDD bays, then close the system chassis lid.

Successful installation can be confirmed in the system BIOS under System Summary, “Internal Bay Slot 1-1 & 2-1 plus Internal Bay Fan”.

Single U.2 / U.3 SSD PCIe AIC

U.2 & U.3 drives are also supported via single slot add-in-card (AIC). One U.2 / U.3 drive is supported per add-in-card. Creating RAID volumes between add-in-cards is not supported.

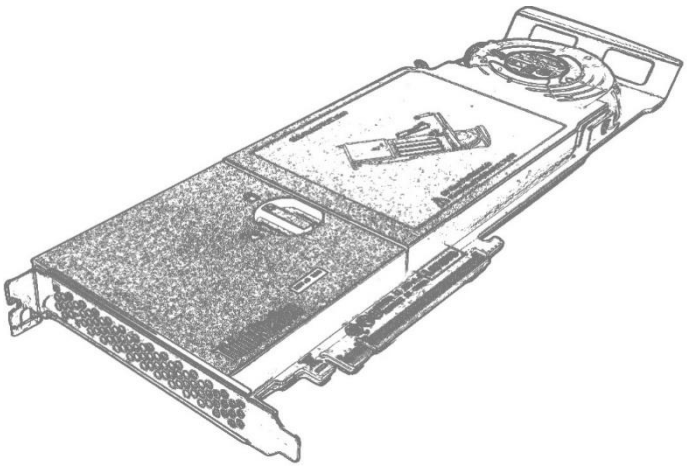

Drive installation steps:

Rotate the lock to the open position to open the cover (1) and open the door (2).

Install the 2.5” U.3 Drive.

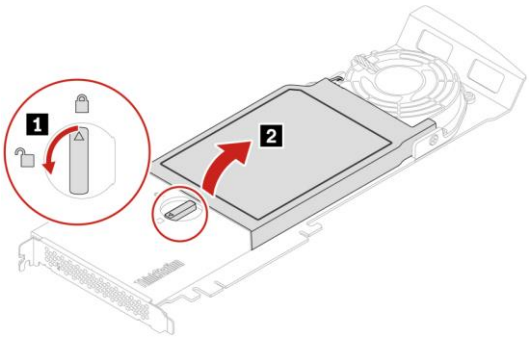

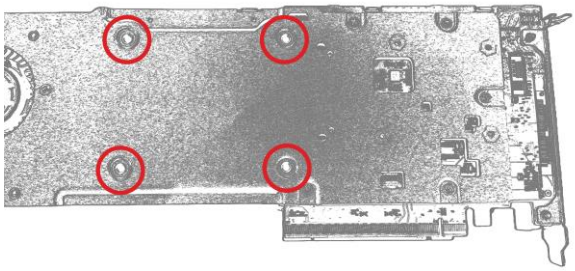

Carefully turn over the adapter card and install the four screws provided.

Return the adapter card the right way up, close & secure the door.

Install the Single U.2 / U.3 SSD PCIe AIC in a PCIe x16 card slot on the system board. See “Motherboard diagram” on page 7.

Successful installation can be confirmed in the system BIOS under System Summary,

Section 4 – P8 SATA Hard Drive Details

P8 supports a variety of different SATA hard drive storage options. The two tables below give details on the features, compatibility, and required parts for SATA hard drives. Installation location and information for each of the SATA hard drive options can be found in the subsequent pages.

Table 7 – SATA HDD features

Feature	Internal 3.5” bays (SATA)	3rd HDD bay kit
Drive Count (System max = 3)	Up to 2	1
Drive size	3.5” only*	3.5” only
Maximum SATA speed	6Gb/s SATA3	6Gb/s SATA3
Availability	Standard	Optional
Location	Internal 3.5” bays	Bracket above CPU
Controller	PCH	PCH
Front accessible	No	No
Toolless	Yes	Yes
Hot swappable	No	No
Combined in system activity LED**	Yes	Yes

* The drive trays for the internal bays each can adapt without any additional parts to hold a SATA 2.5” drive. However, at the time of writing, only 3.5” SATA drives have been certified by Lenovo on P8.

** Refer to the image below for the location of the front panel storage activity LED

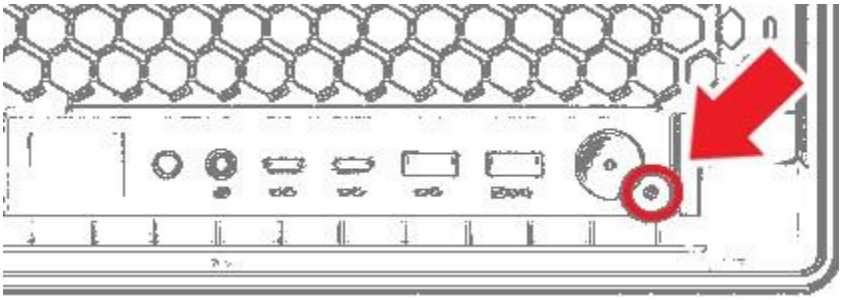

Table 8 – SATA HDD compatibility and required parts.

Location	Compatibility	Requirements and parts
Internal 3.5” SATA Bays 1 & 2	Not compatible with internal 3.5” bays M.2/U.3 SSD kit	• SATA dual drop power cable included standard (supports both bays) • Standard SATA signal cable count, · 0 drives configured: one cable. · 1-2 drives configured: two cables.
3rd HDD Bay kit		• Optional HDD kit (includes cables)

Note: Microsoft Windows 11 does not support booting from magnetic rotational media.

Internal 3.5” SATA drive 1 & 2 installation:

All P8 models have two standard 3.5” SATA HDD bays, which are located at the inside lower front corner of the chassis.

Pinch the arrowed tabs and pull the drive trays out of the system.

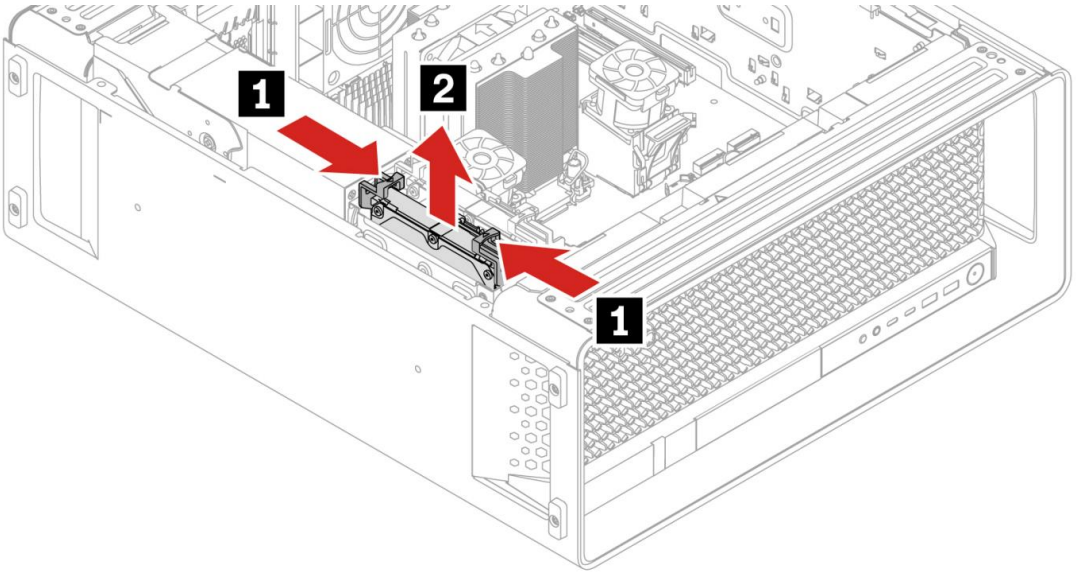

(1) Insert the 3.5” SATA drive into the tray using the metal pegs, with the drive face up and the HDD port/connector facing the end with the handles,
(2) The tray is quite flexible and designed to bend to accommodate the metal pegs that secure the drive, gently bend the bracket,
(3) lower the drive into place latching the remaining pegs.

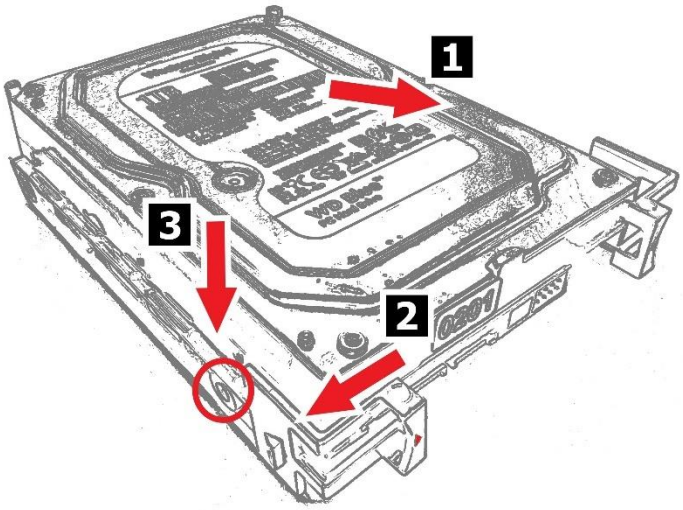

Reinsert the drive/tray assembly upside down into one of the 3.5” HDD bays. Ensure it goes all the way in and clicks into place.

(1) Connect the SATA data and power cables. One dual drop SATA power cable and one single drop SATA data cable are supplied as standard in every P8 system.
(2) For the second 3.5” HDD, the cable can be routed to the SATA ports on the motherboard along the same path that the installed power & data cables follow.

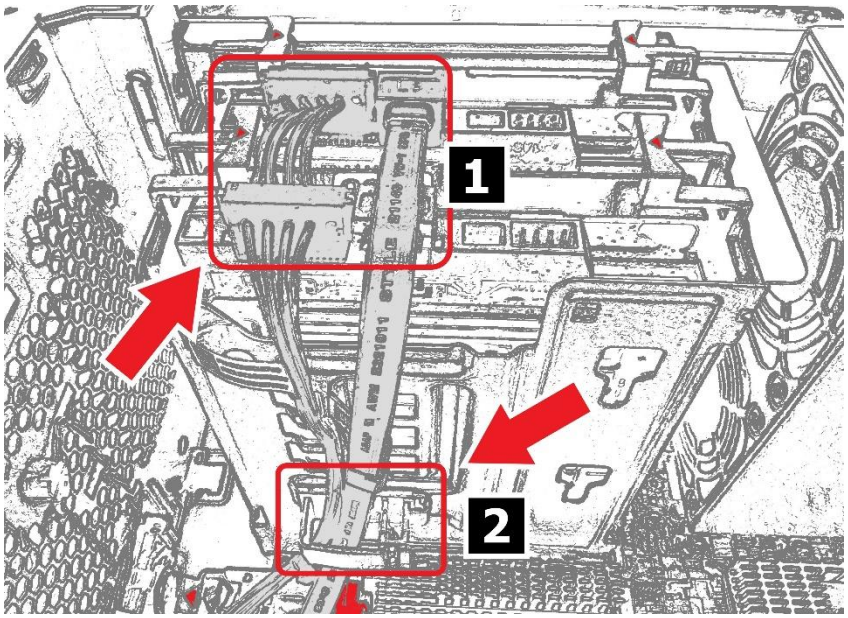

Plug the SATA data cable/s into SATA ports (1) and/or (2).

(C14, C17 & C15) on the system cover diagram, page 7.

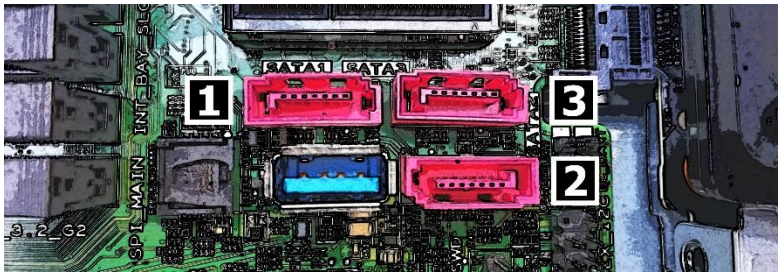

If the Internal Bay Fan was not supplied with the system, now is the time to install one. The power plug and motherboard socket location are color coded and keyed. The Internal Bay Fan and socket have a brown connector.

(R4) on the system cover diagram, page 7.

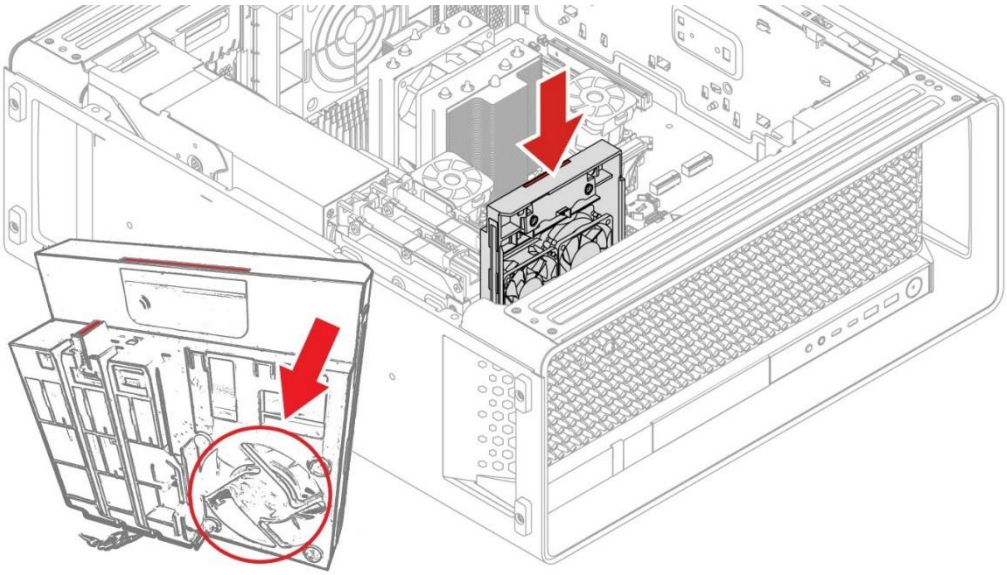

Successful installation can be confirmed in the system BIOS under System Summary, “SATA Drive 1 & 2 and Internal Bay Fan”.

3rd SATA drive bay kit installation:

An optional 3rd 3.5” SATA HDD can be installed in a tray that mounts just above the CPU. The kit consists of the tray, drive carrier, data and power cables.

Before installing the tray and drive carrier, connect the SATA power and data cable to the C7 (Internal Bay Power 2) and C15 (SATA 3) connectors on the motherboard. Refer to the diagram on the inside cover of the system depicting where these are located and on page 7 of this document.

(C7 & C15) on the system cover diagram, page 7.

The optional high-end CPU Fan unit is also **required** when the 3rd HDD bay is installed. The power plug and motherboard socket location are color coded and keyed. Hook the SATA power and data cables through the cable management clip at the top of the fan unit.

(C9) on the system cover diagram, page 7.

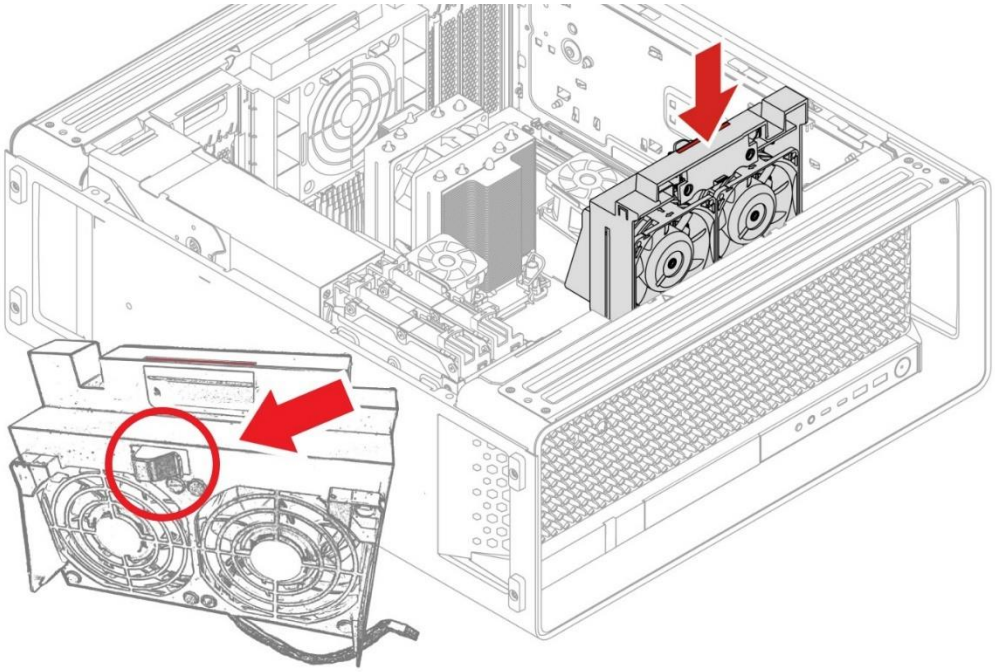

Install the 3rd SATA HDD tray,

(1) Insert the lower mounting posts of the 3rd SATA HDD tray into the lower chassis slots. There are arrows etched into the chassis.
(2) Then, using the lower posts as a pivot point, rotate the top of the tray down taking care not to squash the SATA & power cable routed previously.
(3) The latching buttons should pop out to ensure the tray is secured.

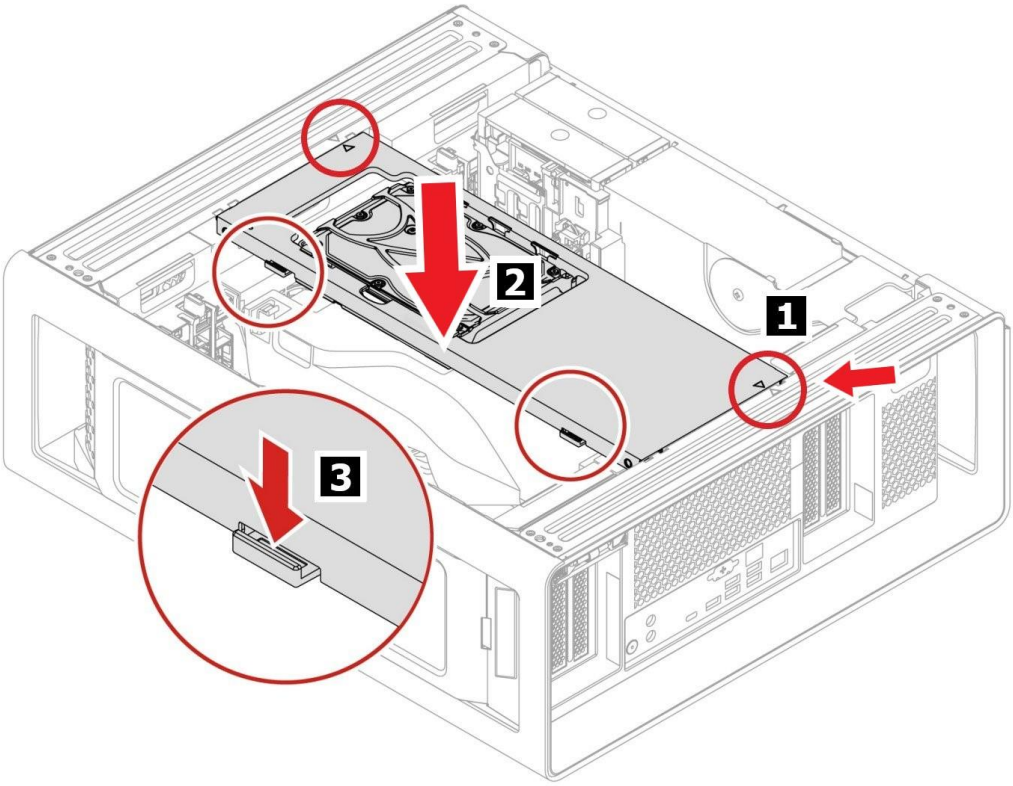

Remove the 3.5” SATA HDD carrier from the 3rd SATA HDD tray,

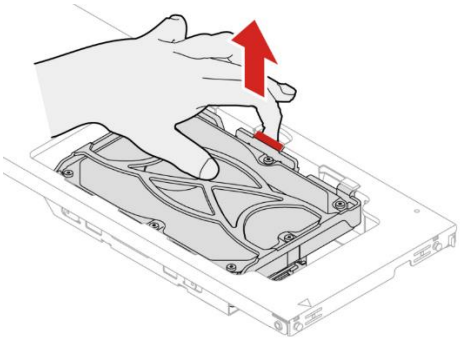

(1) Turn the carrier over and insert the drive into the tray with the drive face down, it will only fit in the bracket one way.
(2) The tray is quite flexible and designed to bend to accommodate the metal pegs that secure the drive, gently bend the bracket,
(3) lower the drive into place latching the remaining pegs.

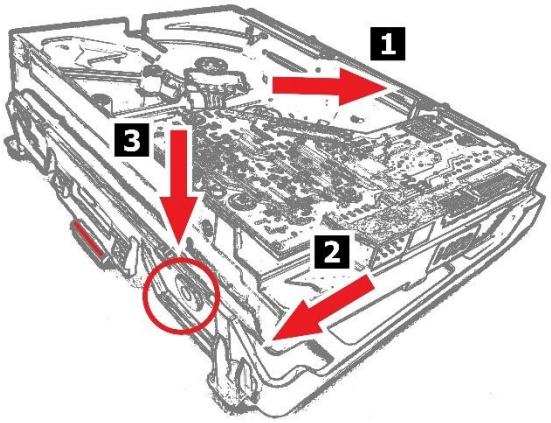

Return the drive right side up and install the drive back into the systems 3rd SATA HDD tray, connecting the SATA and Power cable installed previously at the same time.

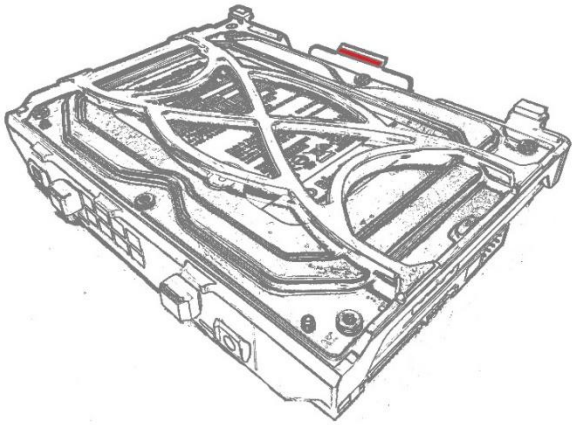

Successful installation can be confirmed in the system BIOS under System Summary, “SATA Drive 3 and Front Fan 1 & 2”.

Section 5 – Configuring RAID From BIOS

Please refer to the following steps to configure RAID for P8.

1. Boot into the BIOS by pressing the function **F1** key at the Lenovo splash screen.

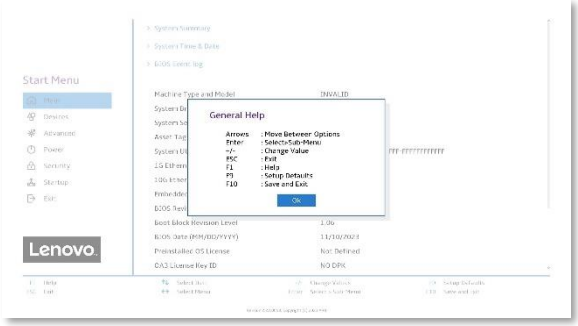

2. From the **Main** start menu item select **System Summary** to verify required drives are being seen by the system.

To Enable NVMe RAID:

3. Select the **Devices** start menu option from the BIOS main screen setup utility and then select **NVMe Setup**.

4. In the NVMe Setup menu, select **NVMe RAID Mode** and change or verify the option is set to **Enabled**.

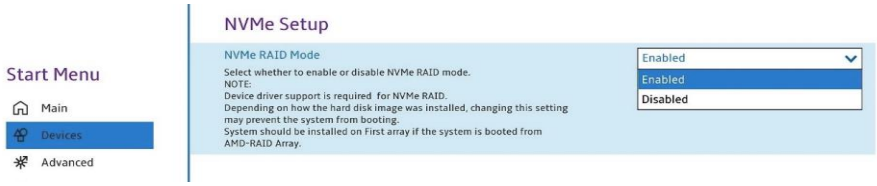

Note: To secure erase NVMe drives, the NVMe Setup RAID Mode must be set to Disabled.

5. Press function **F10** to save configuration and reset.

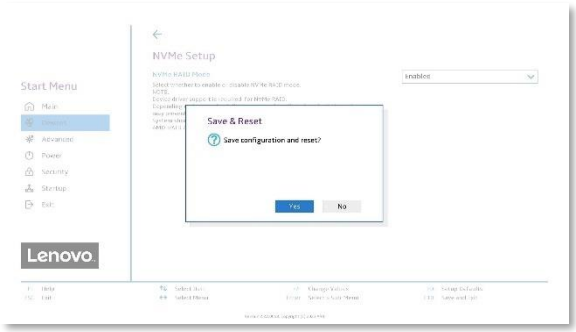

Advance to item 10.

To Enable SATA RAID:

6. Select the **Devices** start menu option from the BIOS main screen setup utility and then select **Storage Setup**.

7. Within the **Storage Setup** menu, select “Configure SATA as” and change or verify the option is set to “RAID”.

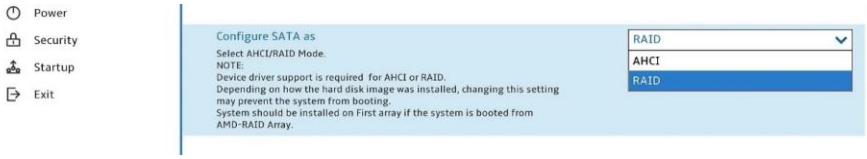

Note: To secure erase SATA drives, the Configure SATA as option must be set to AHCI mode.

8. At the Attention prompt select **Yes** to proceed.

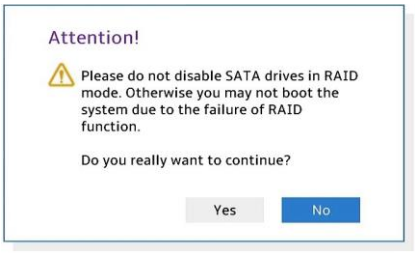

9. Press function **F10** to save configuration and reset.

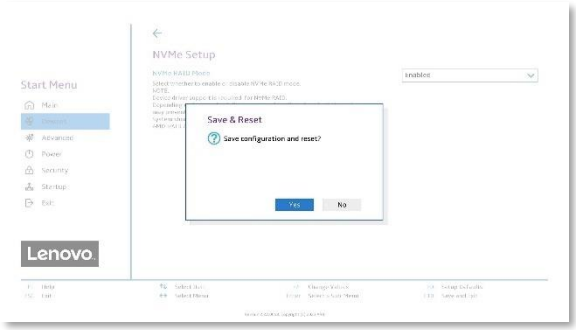

RAID setup continued:

10. As the system reboots, press the function **F1** key to re-enter the BIOS setup. Select the **Devices** start menu option from the BIOS main screen setup utility and then **RAIDXpert2 Configuration Utility**.

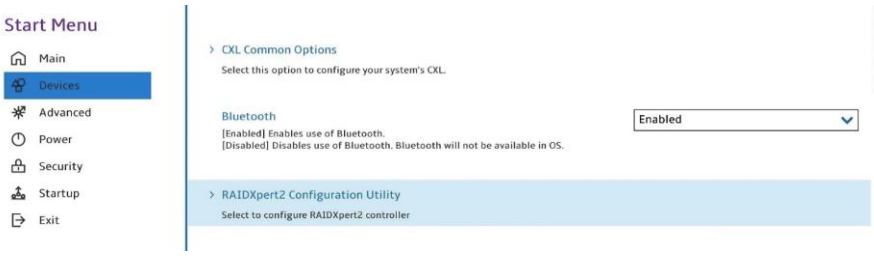

11. Select **Array Management**

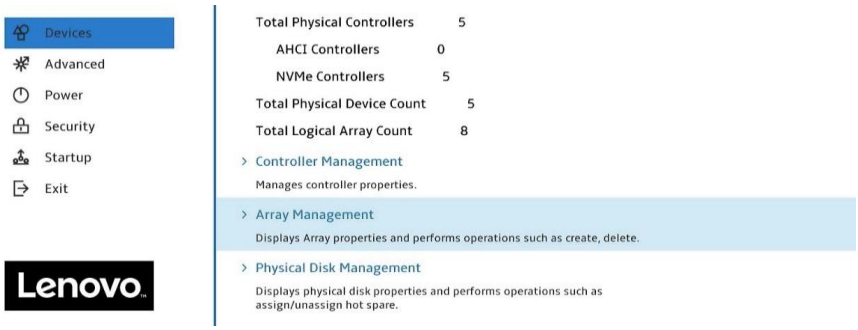

12. To ensure that all disks will be available it may be necessary to clear any previous data from the disks. If no arrays have been created previously but the “Delete Array” option is available, select it. If no arrays exist on the system, the “Manage Array Properties” and “Delete Array” options are unavailable.

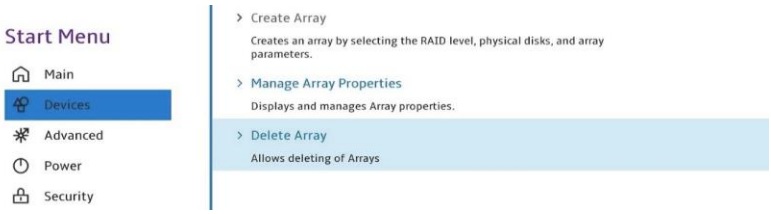

13. All existing arrays are shown. Check the box for any array to be deleted and select **Delete Arrays**.

Deleting Arrays is dangerous, use with caution, data loss can occur.

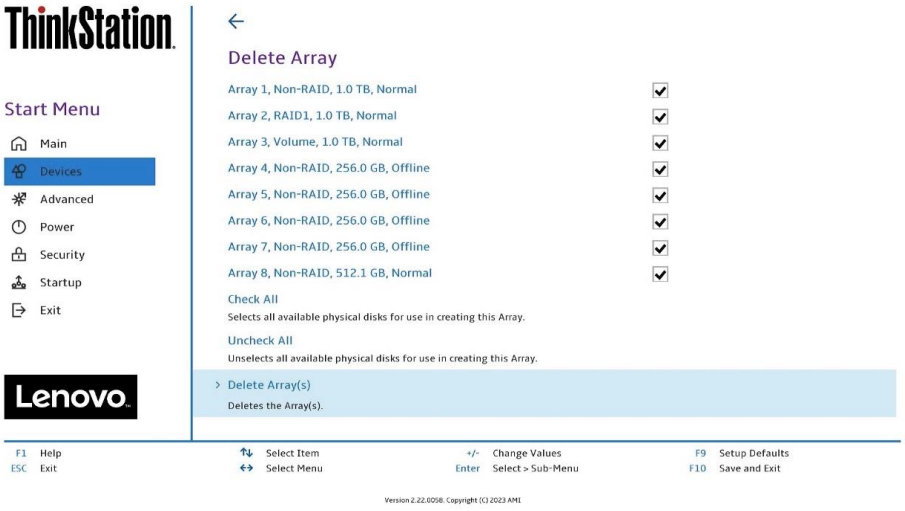

14. Heed the warning and check the **Confirm** box and select **YES** to complete the process.

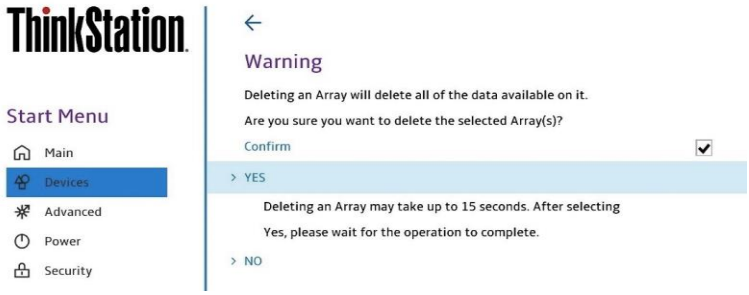

15. No arrays are found on the system. Go back to the Array Management menu and note the only available option is Create Array. Select **Create Array**.

16. Select the desired RAID level from the **Select RAID Level** dropdown.

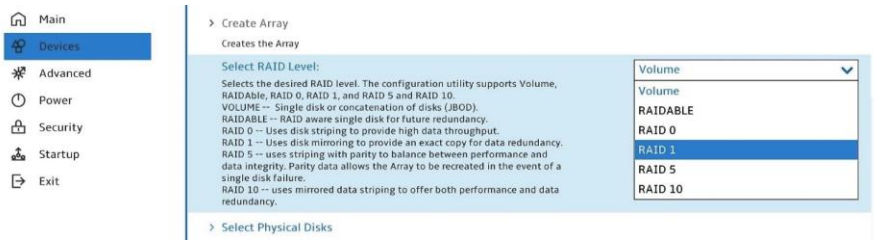

Note: All RAID levels are listed below “Select RAID Level” with a brief description. However, based on the available drives in the system, not all RAID levels may be shown in the drop-down box.

17. After selecting the desired RAID level, proceed with **Select Physical Disks**.

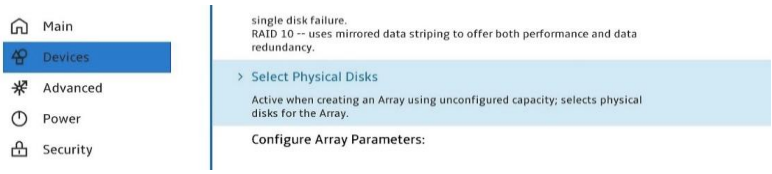

18. There is an option to select media type to only show HDDs or SSDs. This can be used to ensure that only one type of drive is selected. Check the boxes of the desired disks and then select **Apply Changes**.

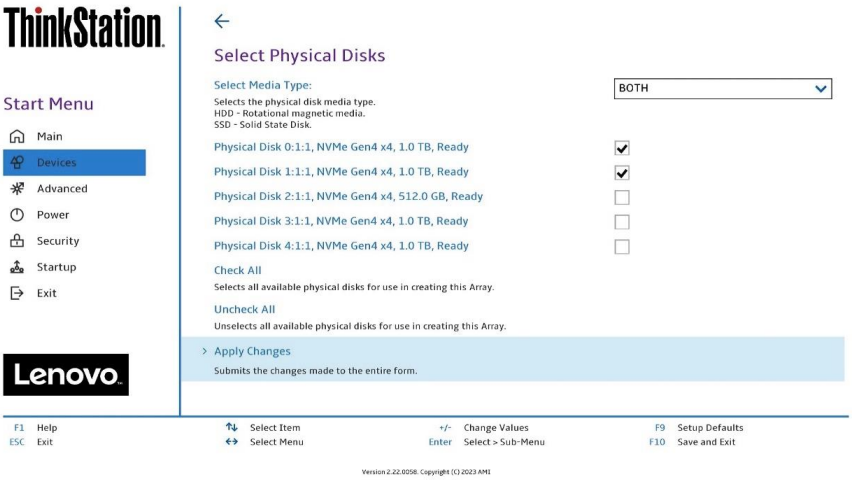

19. Select **Create Array** to complete the process.

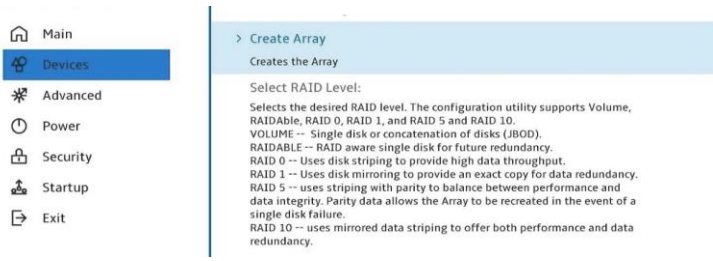

20. To verify the array was created and to view information about the array, select Manage Array Properties.

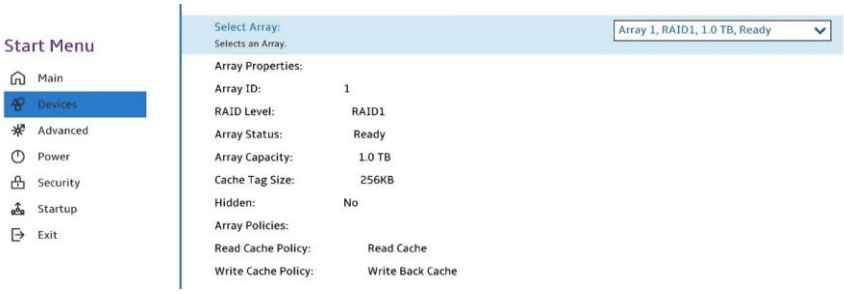

21. Now **F10** to save configuration and reset.

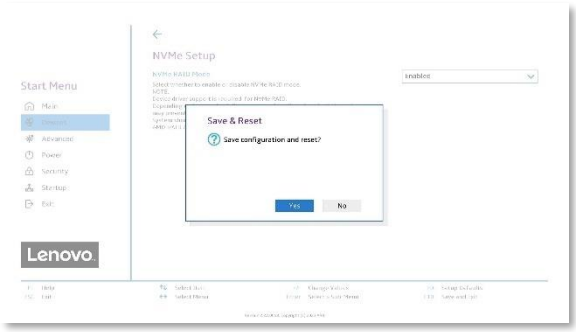

Note: Performance of the array may be degraded until initialization has completed, it should however be usable right away.

The user may not see the RAID array show up in the BIOS boot sequence until after a bootable operating system has been installed on the RAID array. Please refer to the relevant operating system white paper for further advice and guidance.

Section 6 – Appendix

The ThinkStation P8 platform contains new mechanical parts for different storage device options. The following images and FRU's offer a visual representation of some of these components for reference.

Table 9 – Compatible parts and upgrades mentioned throughout this document.

Parts	Picture
Onboard M.2 SSD Carrier + Heatsink Gen4 • M.2 Heatsink kit (SSD 1 & 2) FRU: 5M11H28470 • M.2 Unique Heatsink kit (SSD 3) FRU: 5M11H28811 NB: Supplied as **standard** without M.2 installed.	
Onboard M.2 SSD Carrier + Heatsink Gen5 10W • M.2 Heatsink kit (SSD 1, 2 & 3) FRU: 5M11N44167 NB: Supplied as standard without M.2 installed **only** when at least 1 x Gen5 drive is supplied with the system.	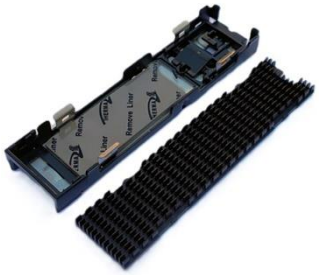
Optional high-end CPU Fan • Optional CPU Front Fan duct with 2 Fan FRU: 5M11C16910 Part of accessory option kit: 4XH1M73929	
Optional FLEX Bay Kit • Front Storage Bay Fan & Guard FRU: 5M11C16911 • Flex Bay Frame FRU: 5M11H28814 • M.2 Flex Bay Carrier FRU: 5M11H28815 Accessory option kit: 4XH1P80848	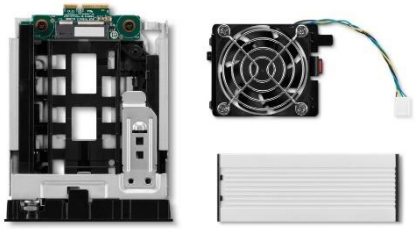

Optional 3rd 3.5” SATA Bay

- Internal Optional 3rd Inner Bay FRU: 5M11C16908
- SATA data cable, 350mm FRU: 5C10U58385
- SATA 1-drop power cable, 300mm FRU: 5C10U58388

Part of accessory option kit: 4XH1M73929

3.5” Internal tray for Dual M.2 SSD

- Internal tray for Dual M.2 FRU: 5M11H28817
- Dual M.2 interposer card FRU: Included
- Top & Bottom Heatsink FRU: Included

Part of accessory option kit: 4XH1P80847

3.5” Internal tray for 2.5” U.3 SSD

- Internal tray for U.2 FRU: 5M11H28818
- U.2 interposer card FRU: Included
- Top & Bottom Heatsink FRU: Included

NB: Displayed with U.3 drive pre-installed

Accessory option kit: 4XH1P80847 required
in addition to x2 of these trays.

Internal bay for NVMe kit (Integrated Controller)

- 84-pin NVME Gen4 Type2 cable for internal bay1, 400mm FRU: 5C10U58826
- 84-pin NVME Gen4 Type2 cable for internal bay2, 400mm FRU: 5C10U58827
- NVME Metal Bracket FRU: 5M20U51216
- Screw, M3 x4, Hexhead FRU: Included
- Screw, M3 HR-L5 x4, Hexhead FRU: Included

Part of accessory option kit: 4XH1P80847

Optional Storage Bay Fan

- 60x25 fan with guard 90mm cable FRU: 5F10U94085
- FAN-GROMMETS FRU: 5M20U50934

Part of accessory option kit: 4XH1P80847

SATA data cable for 2nd SATA HDD

- SATA signal cable for Internal tray FRU: 5C10U58386

Optional PCIe Quad M.2 Adapter Gen4

- PCIe Gen4 Quad M.2 SSD Adapter FRU: 5C51K23010

Accessory option kit: 4XH1Q94605

NB: No M.2 drives included

Optional PCIe Quad M.2 Adapter Gen5

- PCIe Gen5 Quad M.2 SSD Adapter FRU: 5C51M21362

Accessory option kit: 4XH1S82999

NB: No M.2 drives included

Optional PCIe Single U.2/U.3 Adapter

- PCIe Gen4 Quad M.2 SSD Adapter FRU: 5C51K23011

NB: U.3 drive not included

Revision History

Version	Date	Author	Changes/Updates
1.0	21/02/2024	Matthew R	Initial Release
1.1	12/09/2024	Matthew R	Quad M.2 AIC + U.3 AIC Inclusion
1.1.1	04/10/2024	Matthew R	Minor layout correction
1.2	07/04/2025	Matthew R	Gen5 Quad M.2 AIC + 4TB Drives