Lenovo

ThinkCentre®

ThinkCentre X1 User Guide

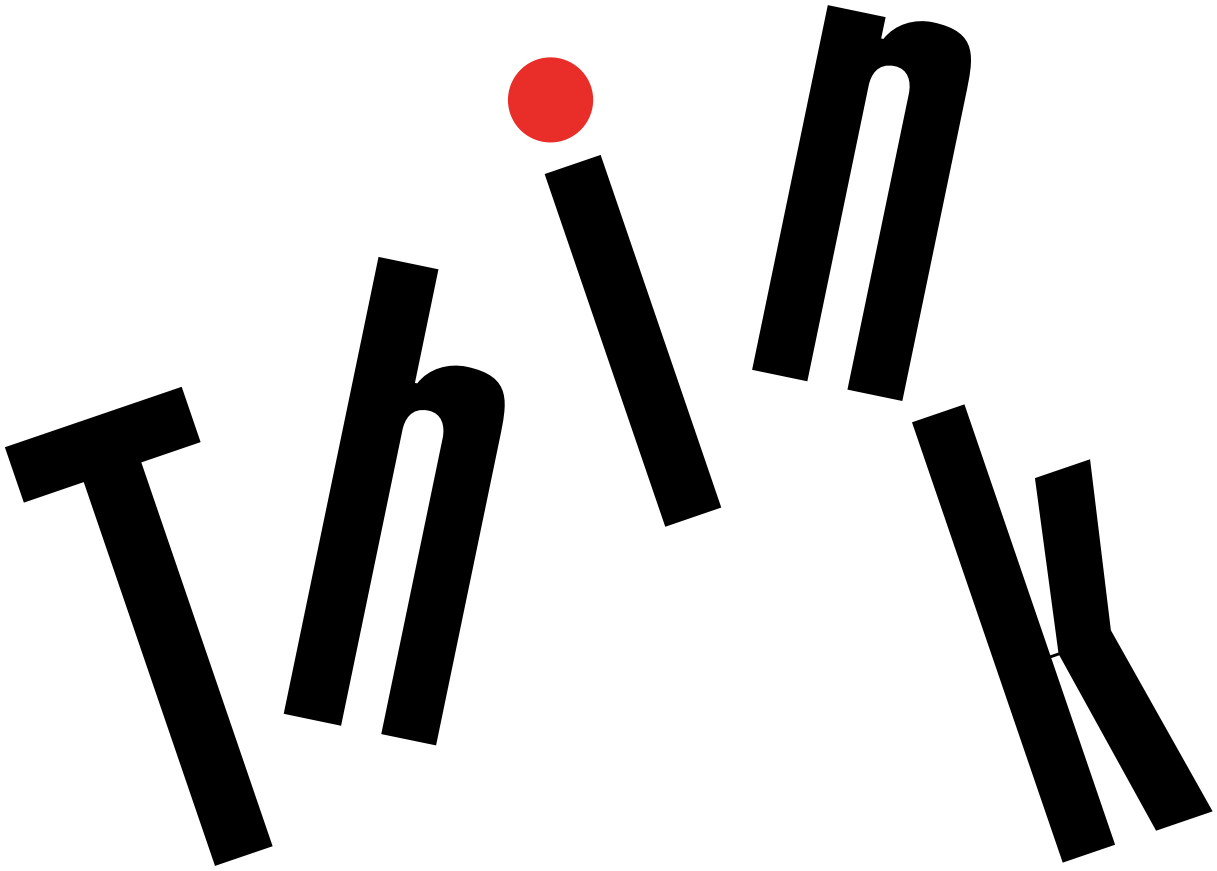

Machine Types: 10HT, 10HU, 10JX, 10JY, 10JW, 10K0, 10KE, and 10KF

Note: Before using this information and the product it supports, be sure to read and understand the “Read this first: Important safety information” on page iii and Appendix E “Notices” on page 73.

Fourth Edition (June 2017)

© Copyright Lenovo 2016, 2017.

LIMITED AND RESTRICTED RIGHTS NOTICE: If data or software is delivered pursuant to a General Services Administration “GSA” contract, use, reproduction, or disclosure is subject to restrictions set forth in Contract No. GS-35F-05925.

Contents

Read this first: Important safety information iii
Before using this manual iii
Service and upgrades iii
Static electricity prevention iv
Power cords and power adapters iv
Japanese power cord and power adapter description v
Extension cords and related devices v
Plugs and outlets v
External devices v
Heat and product ventilation v
Operating environment vi
Power supply statement vi
Cleaning and maintenance vii
Glass parts notice vii
Tip-over hazard prevention notice vii

Chapter 1. Product overview 1
Hardware locations 1
Front view 1
Rear view 3
Computer components 5
Parts on the system board 6
Machine type and model label 7
Features 7
Specifications 10
Programs 10
Accessing a program on the computer . . . 10
Installing a program that is ready to be installed 11
An introduction to Lenovo programs 11

Chapter 2. Using your computer . . . 13
Adjusting the computer stand 13
Adjusting the Orchid Tilt Stand 13
Registering the computer 13
Setting the computer volume 14
Adding an icon to the Windows notification area . 14
Connecting to a network 14
Connecting to an Ethernet LAN 14
Connecting to a wireless LAN 14
Connecting to a Bluetooth-enabled device . . 15

Chapter 3. You and your computer . . 17
Arranging your workspace 17
Glare and lighting 17
Air circulation 17
Electrical outlet locations and cable lengths . 17
Comfort 17
Accessibility information 18
Cleaning the computer 21
Maintenance 21
Basic maintenance tips 21
Good maintenance practices 21
Keeping the computer current 22
Moving the computer 23

Chapter 4. Security 25
Locking the computer 25
Attaching a Kensington-style cable lock . . . 26
Viewing and changing security settings in the Setup Utility program 26
Preventing unauthorized access to the computer . 26
Using the cover presence switch 27
Using and understanding firewalls 27
Protecting data against viruses 27
Computrace Agent software embedded in firmware 28
Trusted Platform Module (TPM) 28

Chapter 5. Advanced configuration . . 29
Using the Setup Utility program 29
Starting the Setup Utility program 29
Enabling or disabling a device 29
Enabling or disabling the Automatic Power On features 29
Enabling or disabling the ErP LPS compliance mode 30
Enabling or disabling the Configuration Change Detection feature 30
Using BIOS passwords 31
Selecting a startup device 32
Exiting the Setup Utility program 33
Updating the BIOS 33

Chapter 6. Troubleshooting, diagnostics, and recovery 35
Basic procedure for resolving computer problems 35
Troubleshooting 35
Startup problems 35
Audio problems 36
CD problems 37
DVD problems 37

© Copyright Lenovo 2016, 2017

Intermittent problems 38
Storage drive problems 38
Screen problems 39
Networking problems 40
Performance problems 42
Serial connector cannot be accessed 43
USB device problems 43
Software and driver problems 43
Diagnostics 44
Lenovo Solution Center 44
Recovery information 44
Recovery information for Windows 7 44
Recovery information for Windows 10 45

Chapter 7. Installing or replacing hardware 47
Handling static-sensitive devices 47
Installing or replacing hardware 47
Installing external options 47
Replacing the power adapter 48
Removing the slide cover 49
Replacing the bottom cover 50
Replacing the memory module 51
Replacing the Orchid Tilt Stand 53
Completing the parts replacement 54

Chapter 8. Getting information, help, and service 57
Information resources 57
Accessing the user guide in various languages 57
Windows help system 57
Safety and warranty 57
Lenovo Web site 57
Lenovo Support Web site 58
Frequently asked questions 58
Help and service 58
Calling for service 58
Using other services 59
Purchasing additional services 59

Appendix A. Regulatory information 61
Export classification notice 61
Electronic emissions notices 61
Federal Communications Commission Declaration of Conformity 61
Eurasian compliance mark 63
Brazil audio notice 63
Mexico wireless-radio compliance information . . 63
Taiwan vision precaution notice 63
Additional regulatory information 63

Appendix B. WEEE and recycling information 65
Important WEEE information 65
Recycling information for Japan 65
Recycling information for Brazil 66
Battery recycling information for Taiwan 66
Battery recycling information for the European Union 67

Appendix C. Restriction of Hazardous Substances (RoHS) Directive 69
European Union RoHS 69
Turkish RoHS 69
Ukraine RoHS 69
India RoHS 69
China RoHS 70
Taiwan RoHS 70

Appendix D. ENERGY STAR model information 71

Appendix E. Notices 73
Trademarks 74

Read this first: Important safety information

CAUTION:
Before using the computer, be sure to read and understand all the related safety information for this product. Refer to the safety information in this section and in the *Safety and Warranty Guide* **that you received with this product. Reading and understanding all the safety information reduces the risk of personal injury and damage to your product. If you no longer have a copy of the** *Safety and Warranty Guide***, you can obtain a Portable Document Format (PDF) version from the Lenovo® Support Web site at http://www.lenovo.com/UserManuals.**

Before using this manual

CAUTION:
Before using this manual, be sure to read and understand all the related safety information for this product. Refer to the information in this section and the safety information in the *Safety and Warranty Guide* **that you received with this product. Reading and understanding this safety information reduces the risk of personal injury and damage to your product.**

If you no longer have a copy of the *Safety and Warranty Guide*, you can obtain a Portable Document Format (PDF) version from the Lenovo® Support Web site at http://www.lenovo.com/UserManuals.

Service and upgrades

Do not attempt to service a product yourself unless instructed to do so by the Customer Support Center or your documentation. Only use a Service Provider who is approved to repair your particular product.

Note: Some computer parts can be upgraded or replaced by the customer. Upgrades typically are referred to as options. Replacement parts approved for customer installation are referred to as Customer Replaceable Units, or CRUs. Lenovo provides documentation with instructions when it is appropriate for customers to install options or replace CRUs. You must closely follow all instructions when installing or replacing parts. The Off state of a power indicator does not necessarily mean that voltage levels inside a product are zero. Before you remove the covers from a product equipped with a power cord, always ensure that the power is turned off and that the product is unplugged from any power source. If you have any questions or concerns, contact the Customer Support Center.

Although there are no moving parts in the computer after the power cord has been disconnected, the following warnings are required for your safety.

CAUTION:

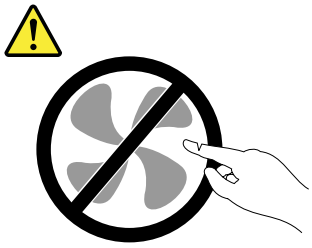

Hazardous moving parts. Keep fingers and other body parts away.

CAUTION:



© Copyright Lenovo 2016, 2017

Before you open the computer cover, turn off the computer and wait several minutes until the computer is cool.

Static electricity prevention

Static electricity, although harmless to you, can seriously damage computer components and options. Improper handling of static-sensitive parts can cause damage to the part. When you unpack an option or CRU, do not open the static-protective package containing the part until the instructions direct you to install it.

When you handle options or CRUs, or perform any work inside the computer, take the following precautions to avoid static-electricity damage:

- Limit your movement. Movement can cause static electricity to build up around you.
- Always handle components carefully. Handle adapters, memory modules, and other circuit boards by the edges. Never touch exposed circuitry.
- Prevent others from touching components.
- When you install a static-sensitive option or CRU, touch the static-protective package containing the part to a metal expansion-slot cover or other unpainted metal surface on the computer for at least two seconds. This reduces static electricity in the package and your body.
- When possible, remove the static-sensitive part from the static-protective packaging and install the part without setting it down. When this is not possible, place the static-protective packaging on a smooth, level surface and place the part on it.
- Do not place the part on the computer cover or other metal surface.

Power cords and power adapters

Use only the power cords and power adapters supplied by the product manufacturer. Do not use the ac power cord for other devices.

The power cords shall be safety approved. For Germany, it shall be H03VV-F, 3G, 0.75 mm^2 (the power cord connected to the power adapter), H05VV-F, 3G, 0.75 mm^2 (the power cord connected to the internal power supply assembly), or better. For other countries, the suitable types shall be used accordingly.

Never wrap a power cord around a power adapter or other object. Doing so can stress the cord in ways that can cause the cord to fray, crack, or crimp. This can present a safety hazard.

Always route power cords so that they will not be walked on, tripped over, or pinched by objects.

Protect power cord and power adapters from liquids. For instance, do not leave your power cord or power adapter near sinks, tubs, toilets, or on floors that are cleaned with liquid cleansers. Liquids can cause a short circuit, particularly if the power cord or power adapter has been stressed by misuse. Liquids also can cause gradual corrosion of power cord terminals and/or the connector terminals on a power adapter, which can eventually result in overheating.

Ensure that all power cord connectors are securely and completely plugged into receptacles.

Do not use any power adapter that shows corrosion at the ac input pins or shows signs of overheating (such as deformed plastic) at the ac input or anywhere on the power adapter.

Do not use any power cords where the electrical contacts on either end show signs of corrosion or overheating or where the power cord appears to have been damaged in any way.

Japanese power cord and power adapter description

電源	バッテリー	メインバッテリー	※16	4 セル リチウムイオンバッテリー (固定式)			
		セカンドバッテリー	※16	なし			
		使用時間(JEITA2.0)	※16	約 9.1 時間	約 9.8 時間	約 7.5 時間	約 8.2 時間
		充電時間(パワーオフ時)	※16	約 3 時間 (パワーオフ)			
	AC アダプター	定格電圧	※15	AC 100-240V(50/60Hz)			
		質量		本体:約 180g コード:約 60g			

※15 日本国内では AC100V 電源でご使用下さい (AC コードは 100V用が付属します) 。

Extension cords and related devices

Ensure that extension cords, surge protectors, uninterruptible power supplies, and power strips that you use are rated to handle the electrical requirements of the product. Never overload these devices. If power strips are used, the load should not exceed the power strip input rating. Consult an electrician for more information if you have questions about power loads, power requirements, and input ratings.

Plugs and outlets

If a receptacle (power outlet) that you intend to use with the computer equipment appears to be damaged or corroded, do not use the outlet until it is replaced by a qualified electrician.

Do not bend or modify the plug. If the plug is damaged, contact the manufacturer to obtain a replacement.

Do not share an electrical outlet with other home or commercial appliances that draw large amounts of electricity; otherwise, unstable voltage might damage the computer, data, or connected devices.

Some products are equipped with a three-pronged plug. This plug fits only into a grounded electrical outlet. This is a safety feature. Do not defeat this safety feature by trying to insert it into a non-grounded outlet. If you cannot insert the plug into the outlet, contact an electrician for an approved outlet adapter or to replace the outlet with one that enables this safety feature. Never overload an electrical outlet. The overall system load should not exceed 80 percent of the branch circuit rating. Consult an electrician for more information if you have questions about power loads and branch circuit ratings.

Be sure that the power outlet you are using is properly wired, easily accessible, and located close to the equipment. Do not fully extend power cords in a way that will stress the cords.

Be sure that the power outlet provides the correct voltage and current for the product you are installing.

Carefully connect and disconnect the equipment from the electrical outlet.

External devices

Do not connect or disconnect any external device cables other than Universal Serial Bus (USB) cables while the computer power is on; otherwise, you might damage the computer. To avoid possible damage to connected devices, wait at least five seconds after the computer is shut down to disconnect external devices.

Heat and product ventilation

Computers, power adapters, and many accessories can generate heat when turned on and when batteries are charging. Always follow these basic precautions:

- Do not leave the computer, power adapter, or accessories in contact with your lap or any part of your body for an extended period when the products are functioning or when the battery is charging. The computer, power adapter, and many accessories produce some heat during normal operation. Extended contact with the body could cause discomfort or, potentially, a skin burn.

© Copyright Lenovo 2016, 2017

- Do not charge the battery or operate the computer, power adapter, or accessories near flammable materials or in explosive environments.
- Ventilation slots, fans, and heat sinks are provided with the product for safety, comfort, and reliable operation. These features might inadvertently become blocked by placing the product on a bed, sofa, carpet, or other flexible surface. Never block, cover, or disable these features.

Inspect your desktop computer for dust accumulation at least once every three months. Before inspecting the computer, turn off the power and unplug the computer's power cord from the electrical outlet; then remove any dust from vents and perforations in the bezel. If you notice external dust accumulation, then examine and remove dust from the inside of the computer including heat sink inlet fins, power supply vents, and fans. Always turn off and unplug the computer before opening the cover. If possible, avoid operating the computer within two feet of high-traffic areas. If you must operate the computer in or near a high-traffic area, inspect and, if necessary, clean the computer more frequently.

For your safety and to maintain optimum computer performance, always follow these basic precautions with your desktop computer:

- Keep the cover closed whenever the computer is plugged in.
- Regularly inspect the outside of the computer for dust accumulation.
- Remove dust from vents and any perforations in the bezel. More frequent cleanings might be required for computers in dusty or high-traffic areas.
- Do not restrict or block any ventilation openings.
- Do not store or operate the computer inside furniture, as this might increase the risk of overheating.
- Airflow temperatures into the computer should not exceed 35°C (95°F).
- Do not install air filtration devices. They may interfere with proper cooling.

Operating environment

The optimal environment in which to use the computer is 10°C–35°C (50°F–95°F) with humidity ranging between 35% and 80%. If the computer is stored or transported in temperatures less than 10°C (50°F), allow the cold computer to rise slowly to an optimal operating temperature of 10°C–35°C (50°F–95°F) before use. This process could take two hours in extreme conditions. Failure to allow the computer to rise to an optimal operating temperature before use could result in irreparable damage to the computer.

If possible, place the computer in a well-ventilated and dry area without direct exposure to sunshine.

Keep electrical appliances such as an electric fan, radio, high-powered speakers, air conditioner, and microwave oven away from the computer because the strong magnetic fields generated by these appliances can damage the monitor and data on the storage drive.

Do not place any beverages on top of or beside the computer or other connected devices. If liquid is spilled on or in the computer or a connected device, a short circuit or other damage might occur.

Do not eat or smoke over your keyboard. Particles that fall into your keyboard can cause damage.

Power supply statement

Never remove the cover on a power supply or any part that has the following label attached.



Hazardous voltage, current, and energy levels are present inside any component that has this label attached. There are no serviceable parts inside these components. If you suspect a problem with one of these parts, contact a service technician.

Cleaning and maintenance

Keep the computer and workspace clean. Shut down the computer and then disconnect the power cord before cleaning the computer. Do not spray any liquid detergent directly on the computer or use any detergent containing flammable material to clean the computer. Spray the detergent on a soft cloth and then wipe the computer surfaces.

Glass parts notice

CAUTION:
Some parts of your product may be made of glass. This glass could break if the product is dropped on a hard surface or receives a substantial impact. If glass breaks, do not touch or attempt to remove it. Stop using your product until the glass is replaced by trained service personnel.

Tip-over hazard prevention notice

- Place the computer on a sturdy and low base, or anchor the furniture and position the computer as far back on the furniture as possible.
- Keep remote controls, toys, and other items that might attract children off the computer.
- Keep the computer, cables, and cords out of the reach of children.
- Supervise children in rooms where these safety tips have not been followed.

© Copyright Lenovo 2016, 2017

Chapter 1. Product overview

This chapter provides information about the following topics:

- “Hardware locations” on page 1
- “Features” on page 7
- “Specifications” on page 10
- “Programs” on page 10

Hardware locations

This section provides information about the locations of the computer hardware.

Note: The computer hardware might look slightly different from the illustrations.

Front view

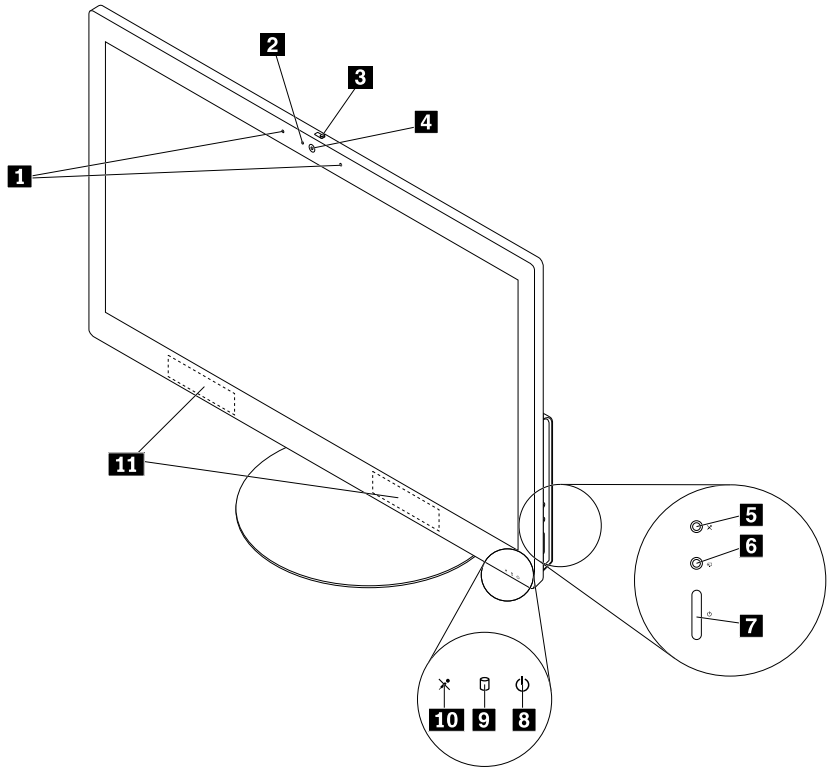

Figure 1. Front view

1 Integrated microphones (2)	2 Integrated camera activity indicator
3 Integrated camera shield control slider	4 Integrated camera
5 Microphone mute/unmute control	6 Monitor/computer mode switch
7 Power button	8 Power indicator

© Copyright Lenovo 2016, 2017

9 Storage drive activity indicator	10 Microphone mute/unmute indicator
11 Internal speakers (2)	

- **Integrated camera**

  Used to take pictures or hold a video conference.
- **Integrated camera activity indicator**

  When the integrated camera activity indicator is on, the camera is in use.
- **Integrated camera shield control slider**

  Used to disable the integrated camera physically.
- **Integrated microphone**

  Used to record sounds or use speech-recognition software without using a microphone.
- **Internal speaker**

  Used to listen to the sounds from your computer without using a headset or headphones.
- **Microphone mute/unmute control**

  Used to mute or unmute the integrated microphones.
- **Microphone mute/unmute indicator**

  When the microphone mute/unmute indicator is on, the microphones are mute or unmute.
- **Power button**

  Used to turn on your computer. You also can use the power button to turn off your computer only when you cannot use any Microsoft® Windows® shutdown procedure to turn off your computer.
- **Power indicator**

  When the power indicator is on, the computer is on.
- **Storage drive activity indicator**

  When the storage drive activity indicator is on, the storage drive is in use.

Rear view

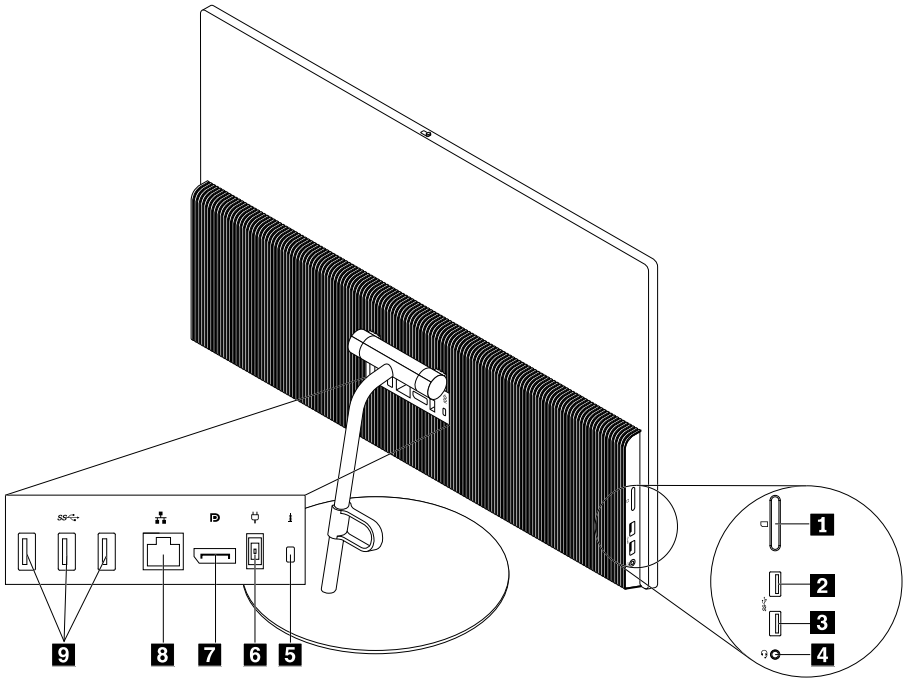

Figure 2. Rear view

1 Card reader slot (optional)	2 Always On USB 3.0 connector (with rapid charge)
3 USB 3.0 connector	4 Headset connector
5 Security-lock slot	6 Power-adapter connector
7 DisplayPort® connector	8 Ethernet connector
9 USB 3.0 connectors (3)	

- **Always On USB 3.0 connector (with rapid charge)**

  Used to connect a device that requires a USB 2.0 or USB 3.0 connection, such as a keyboard, a mouse, a scanner, a printer, or a personal digital assistant (PDA). With the ac power adapter connected, you can charge the automatically detected device even when the computer is in hibernation mode or turned off. To enable the Always On USB function, open the Power Manager program. See “Accessing a program on the computer” on page 10. Then, follow the instructions on the screen.

- **Power-adapter connector**

  Used to connect the power adapter to your computer for power supply.

- **Card reader slot**

  Used to hold a card-shaped storage medium so that the card reader can read the data on the storage medium. Your computer supports the following cards:

  – Memory Stick card
  – Memory Stick PRO card
  – MultiMediaCard (MMC)
  – MMCmobile card
  – MMCplus card
  – Reduced-Size MultiMediaCard (RS-MMC)
  – Secure Digital (SD) card
  – Secure Digital High-Capacity (SDHC) card
  – Secure Digital eXtended-Capacity (SDXC) card
  – xD-Picture card (type M)
  – xD-Picture card (type H)

- **DisplayPort connector**

  Used to send or receive audio and video signals. Another audio or video device (such as a high-performance monitor) can be attached to this DisplayPort connector.

- **Ethernet connector**

  Used to connect an Ethernet cable for a local area network (LAN).

  Note: To operate the computer within Federal Communications Commission (FCC) Class B limits, use a Category 5e or better Ethernet cable.

- **Headset connector**

  Used to connect a headset or headphones to your computer.

- **Microphone connector**

  Used to connect a microphone to your computer when you want to record sound or if you use speech-recognition software.

- **Security-lock slot**

  Used to secure a Kensington-style cable lock. For more information, see “Attaching a Kensington-style cable lock” on page 26.

- **USB 3.0 connector**

  Used to connect a device that requires a USB 2.0 or USB 3.0 connection, such as a keyboard, a mouse, a scanner, a printer, or a PDA.

Computer components

Note: Depending on your computer model, some of the following components might not be available.

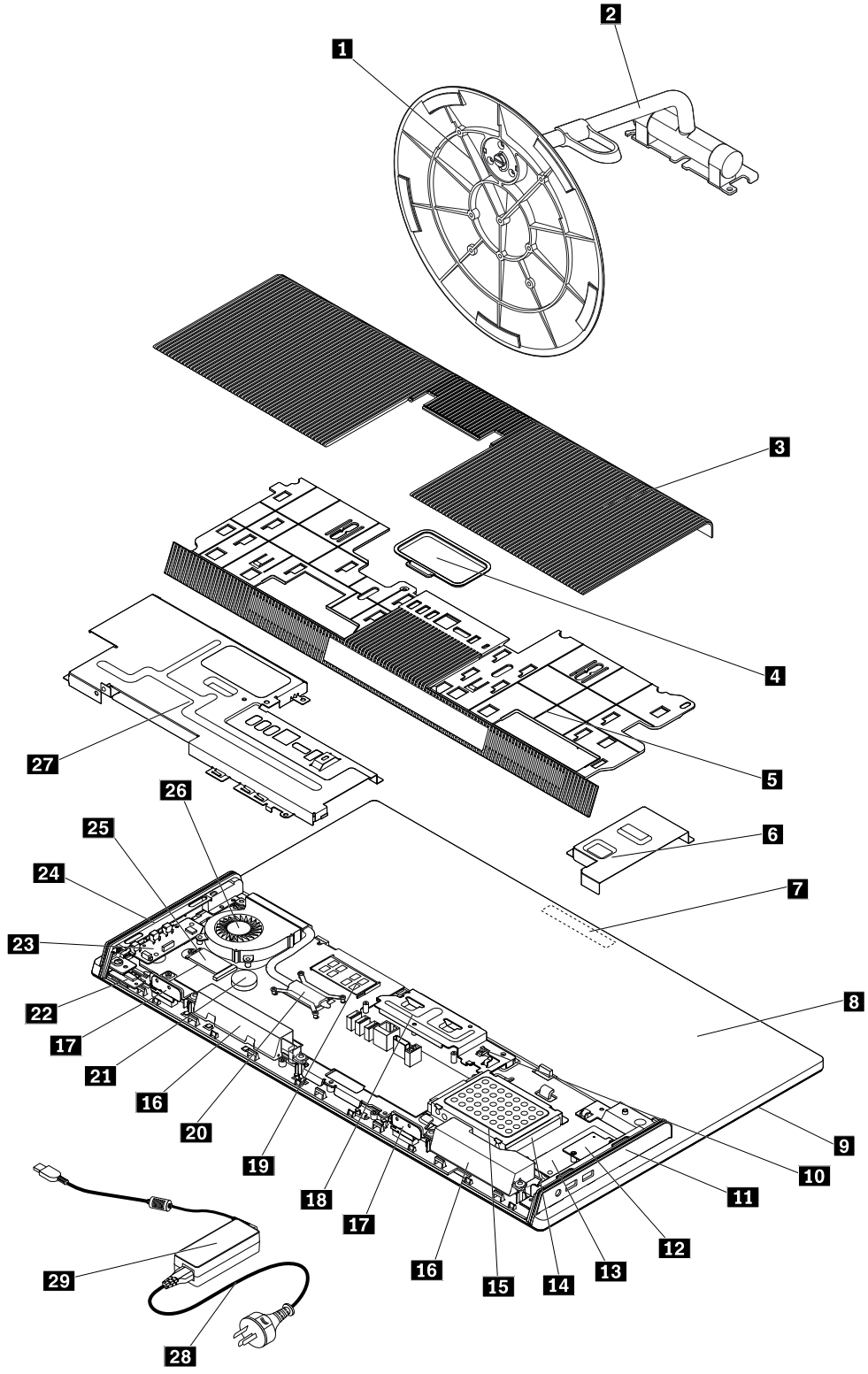

Figure 3. Computer components

1 Orchid Tilt Stand base	2 Orchid Tilt Stand
3 Slide cover	4 Memory module shield
5 Bottom cover	6 I/O shield
7 Integrated camera	8 Computer cover
9 LCD panel	10 Cover presence switch (also known as intrusion switch)
11 I/O bracket	12 Card reader
13 I/O board	14 Storage drive
15 Storage drive bracket	16 Internal speakers (2)
17 Wi-Fi antennas (2)	18 VESA mount bracket
19 Memory module	20 Heat sink
21 Coin-cell battery	22 LED board
23 Control button board	24 Control button board bezel
25 Wi-Fi card	26 System fan
27 System board shield	28 Power cord
29 Power adapter	

Parts on the system board

Note: For the parts that are displayed on the following figure but not introduced in the following table, see “Front view” on page 1 and “Rear view” on page 3.

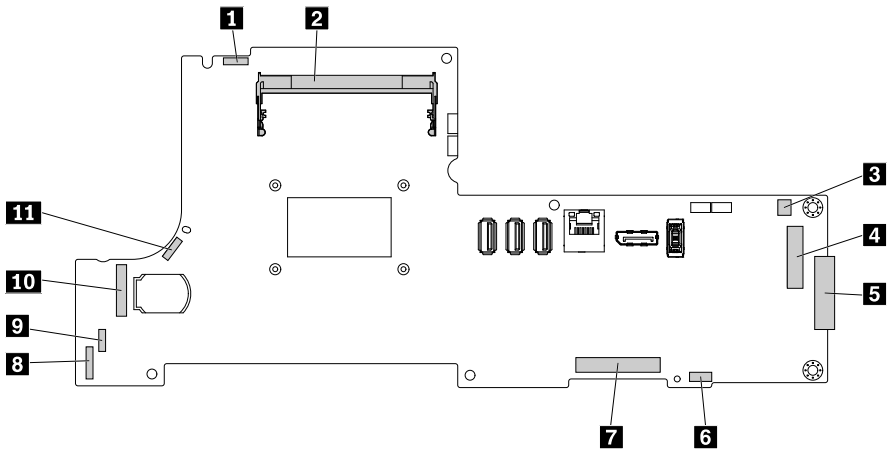

Figure 4. Parts on the system board

1 Integrated camera connector	2 Memory slot
3 Cover presence switch connector (Intrusion switch connector)	4 I/O board connector
5 Storage drive connector	6 Internal speaker connector
7 LCD connector	8 Control button board connector
9 LCD panel connector	10 Wi-Fi card slot
11 System fan connector	

Machine type and model label

The machine type and model label identifies your computer. When you contact Lenovo for help, the machine type and model information helps support technicians to identify your computer and provide faster service.

The machine type and model label is attached on the bottom of your computer as shown.

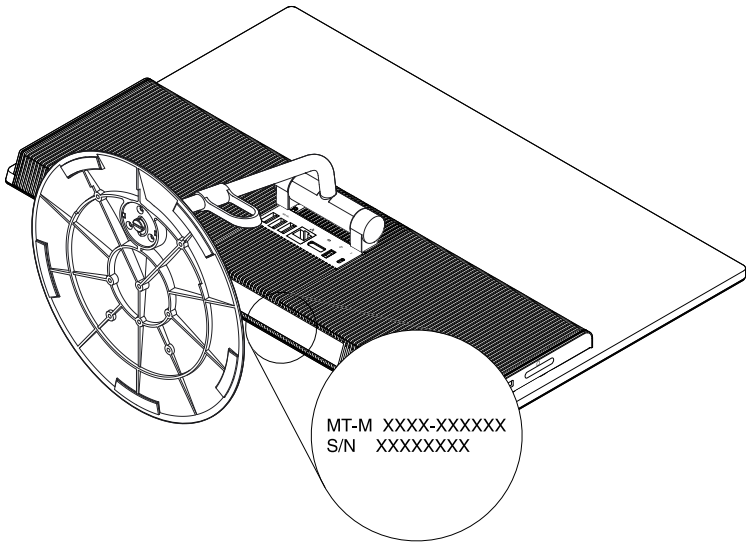

Figure 5. Machine type and model label

Features

The computer features introduced in this section apply to various models.

Information about your computer

- To view basic information (such as microprocessor and memory information) about your computer, do the following:
  1. Click the Start button to open the Start menu.
  2. Depending on your Windows version, do one of the following:
     - For Windows 7: Right-click **Computer**, and then click **Properties**.
     - For Windows 10: Click **Settings → System → About**.

  Note: The memory shown in the operating system might be inconsistent with the nominal memory of the memory module(s) that are installed in your computer.
- To view detailed information about the devices (such as the optical drive and network adapters) on your computer, do the following:
  1. Depending on your Windows version, do one of the following:
     - For Windows 7: Click the Start button to open the Start menu. Right-click **Computer**, and then click **Properties**.
     - For Windows 10: Right-click the Start button to open the Start context menu.
  2. Click **Device Manager**. Type the administrator password or provide confirmation if prompted.

Preinstalled operating system

Your computer is preinstalled with Windows 7 or Windows 10 operating system. Additional operating systems might be identified by Lenovo as compatible with your computer. To determine if an operating system has been certified or tested for compatibility, check the Web site of the operating system provider.

Power supply

Your computer comes with a 90-watt power adapter.

Storage drives

Your computer supports one storage drive.

To view the amount of storage drive space, do the following:

1. Depending on your Windows version, do one of the following:
   - For Windows 7: Click the Start button to open the Start menu. Right-click **Computer**, and then click **Manage**.
   - For Windows 10: Right-click the Start button to open the Start context menu.
2. Click **Disk Management**.

Video feature

The integrated graphics card supports the DisplayPort connector on your computer.

Audio features

The integrated audio card supports the following audio connectors and devices on your computer:

- Headset connector
- Integrated microphone
- Internal speaker

Input/Output (I/O) features

- Audio connectors (headset connector and microphone connector)
- Card reader slot (optional)
- DisplayPort connector
- Ethernet connector
- USB connector

Expansion

- Card reader slot (optional)
- Memory slot
- Storage drive bay

Network features

- Ethernet LAN
- Wireless LAN
- Bluetooth

Security features

For more information, see Chapter 4 “Security” on page 25.

System management features

- Ability to store power-on self-test (POST) hardware test results
- Desktop Management Interface (DMI)

  Desktop Management Interface provides a common path for users to access information about all aspects of a computer. The information includes processor type, installation date, connected printers and other peripherals, power sources, maintenance history, and so on.
- ErP LPS compliance mode

  The energy-related products directive (ErP) lowest power state (LPS) compliance mode reduces the consumption of electricity when your computer is in sleep or off mode. For more information, see “Enabling or disabling the ErP LPS compliance mode” on page 30.
- Intel® Standard Manageability

  Intel Standard Manageability is hardware- and firmware-based technology that makes computers easier and less expensive for businesses to monitor, maintain, update, upgrade, and repair.
- Intel Active Management Technology (AMT) (available on some models)

  Intel Active Management Technology is hardware- and firmware-based technology that makes computers easier and less expensive for businesses to monitor, maintain, update, upgrade, and repair.
- Intel Matrix Storage Manager

  Intel Matrix Storage Manager is a device driver that provides support for Serial Advanced Technology Attachment (SATA) Redundant Array of Independent Disks (RAID) 5 arrays and SATA RAID 10 arrays on specific Intel chipset system boards to enhance hard disk performance.
- Preboot Execution Environment (PXE)

  Preboot Execution Environment enables computers to start through a network interface independent of data storage drives (such as hard disk drives) or installed operating systems.
- System Management (SM) Basic Input/Output System (BIOS) and SM software

  The SMBIOS specification defines data structures and access methods that can be used to read management data stored in the BIOS of a computer.
- Wake on LAN

  Wake on LAN is an Ethernet computer networking standard that allows a computer to be turned on or woken up by a network message. The message usually is sent by a program running on another computer on the same LAN.
- Wake on Ring

  Wake on Ring, sometimes referred to as Wake on Modem, is a specification that allows supported computers and devices to resume from sleep or hibernation mode.
- Windows Management Instrumentation (WMI)

  Windows Management Instrumentation is a set of extensions to the Windows Driver Model. It provides an operating system interface through which instrumented components provide information and notification.

Specifications

This section lists the physical specifications for your computer.

Dimensions (without a computer stand base)

Width: 570 mm (22.4 inches)

Height: 450 mm (17.7 inches)

Depth: 100 mm (3.9 inches)

Weight (without the package)

Maximum configuration as shipped: 5 kg (11 lb)

Environment

- Air temperature:

  Operating: From 10°C (50°F) to 35°C (95°F)

  Storage in original shipping package: From -40°C (-40°F) to 60°C (140°F)

  Storage without package: From -10°C (14°F) to 60°C (140°F)
- Humidity:

  Operating: 20%–80% (non-condensing)

  Storage: 20%–90% (non-condensing)
- Altitude:

  Operating: From -15.2 m (-50 ft) to 3048 m (10 000 ft)

  Storage: From -15.2 m (-50 ft) to 10 668 m (35 000 ft)

Electrical input

Input voltage: From 100 V ac to 240 V ac

Input frequency: 50/60 Hz

Programs

This section provides information about the programs on the computer.

Accessing a program on the computer

To access a program on the computer, do one of the following:

- From Windows Search:
  1. Depending on your Windows version, do one of the following:
     - For Windows 7: Click the Start button to open the Start menu, and then type the program name into the search box.
     - For Windows 10: Type the program name into the search box next to the Start button.
  2. In the search results, click the name of the desired program to launch the program.
- From the Start menu or Control Panel:
  1. Click the Start button to open the Start menu.
  2. Depending on your Windows version, do one of the following:
     - For Windows 7: Click **All Programs** to display the program list. From the list or a folder in the list, click the name of the desired program to launch the program.

– For Windows 10: From the program list or a folder in the list, click the name of the desired program to launch the program.

3. If the program name is not displayed on the Start menu, do one of the following:
   – For Windows 7: Click **Control Panel** on the Start menu.
   – For Windows 10: Click the Start button to open the Start menu, and then click **Windows System → Control Panel**.
4. View Control Panel using large icons or small icons, and then click the name of the desired program to launch the program.

Installing a program that is ready to be installed

Note: For Windows 7, depending on the computer model, some of the Lenovo programs might be ready to be installed, so you need to install them manually. Then, you can access and use these programs.

To install a program that is ready to be installed, do the following:

1. Open the Lenovo ThinkVantage® Tools program. See “Accessing a program on the computer” on page 10.
2. View the program icons using Tiles.
3. Follow the instructions under greyed-out icons to locate the icon for the desired program. Then, double-click the icon to install the program.

An introduction to Lenovo programs

This section provides information about the major Lenovo programs available on your operating system.

Note: Depending on your computer model, some of the following programs might not be available.

- For Windows 7 only:
  – **Create Recovery Media**

    The Create Recovery Media program enables you to restore only the C drive or the entire storage drive to the factory-default settings.
  – **Lenovo Bluetooth Lock**

    The Lenovo Bluetooth Lock program enables you to use a Bluetooth device (such as your smartphone) as a proximity-based unit for locking or unlocking the computer automatically. By detecting the distance between the computer and the predefined Bluetooth device that you are carrying, the Lenovo Bluetooth Lock program automatically locks the computer when you walk away and unlocks the computer when you come back. This is a simple way to protect the computer against unauthorized access in case that you forget to lock the computer.
  – **Lenovo PowerENGAGE**

    The Lenovo PowerENGAGE program enables you to register your computer with Lenovo.
  – **Password Manager**

    The Password Manager program automatically captures and fills in authentication information for Windows programs and Web sites.
  – **Power Manager**

    The Power Manager program provides convenient, flexible, and complete power management for the computer. It enables you to adjust the computer power settings to achieve the best balance between performance and power saving.

- **Rescue and Recovery®**

  The Rescue and Recovery program is a one-button recovery and restore solution. It includes a set of self-recovery tools to help you diagnose computer problems, get help, and recover from system crashes, even if you cannot start the Windows operating system.

- **System Update**

  The System Update program provides regular access to the system updates for your computer, such as device driver updates, software updates, and BIOS updates. The program gathers information from the Lenovo Help Center about new updates for your computer, then sorts and displays the updates for download and installation. You have complete control of which updates to download and install.

- For Windows 10 only:
  - **Lenovo Companion**

    Your computer's best features and capabilities should be easy to access and understand. With Lenovo Companion, they are. Use Lenovo Companion to do the following:

    - Optimize your computer's performance, monitor your computer's health, and manage updates.
    - Access your user guide, check warranty status, and view accessories customized for your computer.
    - Read how-to articles, explore Lenovo forums, and stay up-to-date on technology news with articles and blogs from trusted sources.

    Lenovo Companion is filled with exclusive Lenovo content to help you learn more about what you can do with your computer.

  - **Lenovo ID**

    The Lenovo ID program enables you to create your Lenovo ID and access all supported Lenovo programs and web portals with single sign-on.

  - **Lenovo Settings**

    The Lenovo Settings program is the one stop shop for you to control hardware features, sensors and programs on your computer. Lenovo Settings enables you to optimize device performance by customizing key functions, such as power plans, audio, camera, and networks.

- For Windows 7 and Windows 10:
  - **Lenovo Device Experience or Lenovo PC Experience**

    The Lenovo Device Experience or Lenovo PC Experience program helps you work more easily and securely. The program provides easy access to Lenovo ThinkVantage Tools or Lenovo Tools, important settings and information about your computer, the Lenovo Support Web site, and so on.

  - **Lenovo Display Manager**

    The Lenovo Display Manager program enables you to adjust the brightness, contrast, and resolution of your monitor.

  - **Lenovo Solution Center**

    The Lenovo Solution Center program enables you to troubleshoot and resolve computer problems. It combines diagnostic tests, system information collection, security status, and support information, along with hints and tips for maximum system performance.

Chapter 2. Using your computer

This chapter contains the following topics:

- “Adjusting the computer stand” on page 13
- “Registering the computer” on page 13
- “Setting the computer volume” on page 14
- “Adding an icon to the Windows notification area” on page 14
- “Connecting to a network” on page 14

Adjusting the computer stand

You can use the computer stand to adjust the computer to a position comfortable for you.

Note: The computer stand is optional.

Adjusting the Orchid Tilt Stand

You can adjust the vertical position of the computer between 5° to the front and 45° to the rear as shown.

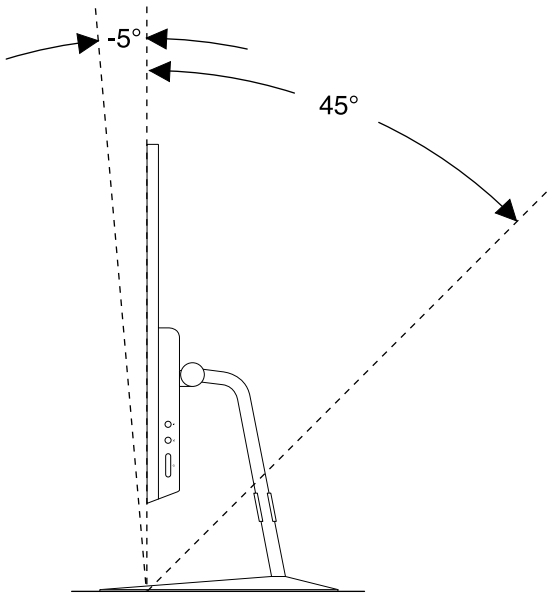

Figure 6. Adjusting the Orchid Tilt Stand

Registering the computer

When you register the computer with Lenovo, you enter required information into a Lenovo database. The information enables Lenovo to contact you when there is a recall or other severe problem and provide quicker service when you call Lenovo for help. In addition, some locations offer extended privileges and services to registered users.

To register the computer with Lenovo, ensure that the computer is connected to the Internet. Then, go to http://www.lenovo.com/register and follow the instructions on the screen.

© Copyright Lenovo 2016, 2017

Setting the computer volume

To set the computer volume, do the following:

1. Click the volume icon in the Windows notification area on the taskbar.

   Note: If the volume icon is not displayed in the Windows notification area, add the icon to the notification area. See “Adding an icon to the Windows notification area” on page 14.

2. Follow the instructions on the screen to adjust the volume. Click the speaker icon to mute the audio.

Adding an icon to the Windows notification area

To add an icon to the Windows notification area, do the following:

1. Click the arrow next to the notification area to view hidden icons. Then, click the desired icon and drag it to the notification area.
2. If the icon is not displayed, turn on the icon.
   a. Click the Start button to open the Start menu.
   b. Depending on your Windows version, do one of the following:
      - For Windows 7: Click **Control Panel**. View Control Panel using large icons or small icons, and then click **Notification Area Icons** → **Turn system icons on or off**.
      - For Windows 10: Click **Settings** → **Personalization** → **Taskbar** → **Turn system icons on or off**.
   c. Turn on the desired icon.
3. If the icon is still not displayed in the Windows notification area, repeat step 1.

Connecting to a network

This section provides information about connecting to a network. If you cannot connect the computer to a network, see “Networking problems” on page 40.

Connecting to an Ethernet LAN

You can connect the computer to an Ethernet LAN by connecting an Ethernet cable to the Ethernet connector.

DANGER

To avoid the risk of electrical shock, do not connect the telephone cable to the Ethernet connector.

Connecting to a wireless LAN

You can connect the computer to a wireless LAN without the use of an Ethernet cable but by means of radio waves only.

Note: The wireless LAN feature is optional.

To establish a wireless-LAN connection, do the following:

1. Ensure that a wireless LAN is available and the wireless LAN feature on the computer is working.
2. Click the wireless-network-connection-status icon in the Windows notification area to display available wireless networks.

   Note: If the wireless-network-connection-status icon is not displayed in the Windows notification area, add the icon to the notification area. See “Adding an icon to the Windows notification area” on page 14.

3. Click a wireless LAN, and then click **Connect** to connect the computer to it. Provide required information if needed.

Connecting to a Bluetooth-enabled device

Bluetooth is a short-range wireless communications technology. Use Bluetooth to establish a wireless connection between the computer and another Bluetooth-enabled device within a distance of about 10 m (32.8 ft).

Note: The Bluetooth feature is optional.

To connect to a Bluetooth-enabled device, do the following:

1. Ensure that the Bluetooth feature on the computer is working and the Bluetooth-enabled device is located within a distance of about 10 m (32.8 ft) from the computer.
2. Click the Bluetooth icon in the Windows notification area on the taskbar.

   Note: If the Bluetooth icon is not displayed in the Windows notification area, add the icon to the notification area. See “Adding an icon to the Windows notification area” on page 14.
3. Depending on your Windows version, do one of the following:
   - For Windows 7: Click **Add a Device** and follow the instructions on the screen..
   - For Windows 10: Click **Add a Bluetooth Device** and follow the instructions on the screen.

Chapter 3. You and your computer

This chapter contains the following topics:

- “Arranging your workspace” on page 17
- “Accessibility information” on page 18
- “Cleaning the computer” on page 21
- “Maintenance” on page 21
- “Moving the computer” on page 23

Arranging your workspace

Arrange your workspace to suit your needs and the kind of work you do. This section provides information about the factors that affect the way you arrange your workspace.

Glare and lighting

Position the computer to minimize glare and reflections from overhead lights, windows, and other light sources. Reflected light from shiny surfaces can cause annoying reflections on your screen. When possible, place the computer at right angles to windows and other light sources. If necessary, reduce overhead lighting by turning off lights or using lower wattage bulbs. If you install the computer near a window, use curtains or blinds to block the sunlight. You can adjust the brightness and contrast controls on the computer as the room lighting changes throughout the day.

Where it is impossible to avoid reflections or to adjust the lighting, an antiglare filter placed over the screen might be helpful. However, these filters might affect the clarity of the image on the screen; try them only after you have exhausted other methods of reducing glare.

Air circulation

The computer produces heat. The computer has a fan that pulls in fresh air and forces out hot air through the air vents. Blocking the air vents can cause overheating, which might result in a malfunction or damage. Position the computer so that nothing blocks the air vents; usually, 51 mm (2 inches) of air space is sufficient. Ensure that the vented air is not blowing on people.

Electrical outlet locations and cable lengths

The following factors might determine the final placement of the computer:

- Locations of electrical outlets
- Length of power cords or power adapters
- Length of the cables that are connected to other devices

For more information about power cords or power adapters, see “Power cords and power adapters” on page iv.

Comfort

Although no single working position is ideal for everyone, here are a few guidelines to help you find a position that suits you best. The following figure sets an example for your reference.

© Copyright Lenovo 2016, 2017



- Screen position: Keep the screen at a comfortable viewing distance, usually 51-61 cm (20-24 inches). Then, adjust the screen so that the top of the screen is at or slightly below eye level and you can view it without twisting your body.
- Chair position: Use a chair that gives you good back support and seat height adjustment. Use chair adjustments to best suit your desired posture.
- Head position: Keep your head and neck in a comfortable and neutral (vertical or upright) position.
- Arm and hand positions: Keep your forearms, wrists, and hands in a relaxed and neutral (horizontal) position. Type with a soft touch without pounding the keys.
- Leg position: Keep your thighs parallel to the floor and your feet flat on the floor or on a footrest.

Make minor modifications in your working posture to deter the onset of discomfort caused by long periods of working in the same position. Frequent, short breaks from your work also help to prevent minor discomfort associated with your working posture.

Accessibility information

Lenovo is committed to providing users who have hearing, vision, and mobility limitations with greater access to information and technology. This section provides information about the ways these users can get the most out of their computer experience. You also can get the most up-to-date accessibility information from the following Web site:
http://www.lenovo.com/accessibility

Keyboard shortcuts

The following table contains keyboard shortcuts that can help make the computer easier to use.

Note: Depending on your keyboard, some of the following keyboard shortcuts might not be available.

Keyboard shortcut	Function
Windows logo key + U	Open Ease of Access Center
Right Shift for eight seconds	Turn on or turn off Filter Keys
Shift five times	Turn on or turn off Sticky Keys
Num Lock for five seconds	Turn on or turn off Toggle Keys
Left Alt+Left Shift+Num Lock	Turn on or turn off Mouse Keys
Left Alt+Left Shift+PrtScn (or PrtSc)	Turn on or turn off High Contrast

For more information, go to http://windows.microsoft.com/, and then perform a search using any of the following keywords: `keyboard shortcuts`, `key combinations`, `shortcut keys`.

Ease of Access Center

Ease of Access Center on the Windows operating system enables users to configure their computers to suit their physical and cognitive needs.

To use Ease of Access Center, do the following:

1. Click the Start button to open the Start menu.
2. Depending on your Windows version, do one of the following:
   - For Windows 7: Click **Control Panel**. View Control Panel using large icons or small icons, and then click **Ease of Access Center**.
   - For Windows 10: Click **Settings → Ease of Access**.
3. Choose the appropriate tool by following the instructions on the screen.

Ease of Access Center mainly includes the following tools:

- Magnifier

  Magnifier is a useful utility that enlarges the entire screen or part of the screen so that you can see the items better.
- Narrator

  Narrator is a screen reader that reads aloud what is displayed on the screen and describes events such as error messages.
- On-Screen Keyboard

  If you prefer to type or enter data into the computer using a mouse, joystick, or other pointing device instead of a physical keyboard, you can use On-Screen Keyboard. On-Screen Keyboard displays a visual keyboard with all the standard keys.
- High Contrast

  High Contrast is a feature that heightens the color contrast of some text and images on your screen. As a result, those items are more distinct and easier to identify.
- Personalized keyboard

  Adjust keyboard settings to make your keyboard easier to use. For example, you can use your keyboard to control the pointer and type certain key combinations easier.
- Personalized mouse

  Adjust mouse settings to make your mouse easier to use. For example, you can change the pointer appearance and make it easier to manage windows with the mouse.

Speech Recognition

Speech Recognition enables you to control the computer by voice.

Using only your voice, you can start programs, open menus, click objects on the screen, dictate text into documents, and write and send e-mails. Everything you do with the keyboard and mouse can be done with only your voice.

To use Speech Recognition, do the following:

1. Depending on your Windows version, do one of the following:
   - For Windows 7: Click **Control Panel** on the Start menu.
   - For Windows 10: Click the Start button to open the Start menu, and then click **Windows System → Control Panel**.
2. View Control Panel using large icons or small icons, and then click **Speech Recognition**.

3. Follow the instructions on the screen.

Screen-reader technologies

Screen-reader technologies are primarily focused on software program interfaces, help information systems, and various online documents. For additional information about screen readers, see the following:

- Using PDFs with screen readers:
  http://www.adobe.com/accessibility.html?promoid=DJGVE
- Using the JAWS screen reader:
  http://www.freedomscientific.com/jaws-hq.asp
- Using the NVDA screen reader:
  http://www.nvaccess.org/

Screen resolution

You can make the text and images on your screen easier to read by adjusting the screen resolution of the computer.

To adjust the screen resolution, do the following:

1. Right-click a blank area on the desktop.
2. Depending on your Windows version, do one of the following:
   - For Windows 7: Click **Screen resolution**.
   - For Windows 10: Click **Display settings**.
3. Follow the instructions on the screen.

Note: Setting the resolution too low might prevent some items from fitting on the screen.

Customizable item size

You can make the items on your screen easier to read by changing the item size.

- To change the item size temporarily, use the Magnifier tool in Ease of Access Center. See “Ease of Access Center” on page 19.
- To change the item size permanently, do the following:
  - Change the size of all the items on your screen.
    1. Right-click a blank area on the desktop.
    2. Depending on your Windows version, do one of the following:
       - For Windows 7: Click **Screen resolution → Make text and other items larger or smaller**.
       - For Windows 10: Click **Display settings**.
    3. Change the item size by following the instructions on the screen.
  - Change the size of the items on a Web page.

    Press and hold Ctrl, and then press the plus-sign key (+) to enlarge or the minus-sign key (-) to reduce the text size.
  - Change the size of the items on the desktop or a window.

    Note: This function might not work on some windows.

    If your mouse has a wheel, press and hold Ctrl, and then scroll the wheel to change the item size.

Industry-standard connectors

The computer provides industry-standard connectors that enable you to connect assistive devices.

TTY/TDD conversion modem

The computer supports the use of a text telephone (TTY) or the telecommunications device for the deaf (TDD) conversion modem. The modem must be connected between the computer and a TTY/TDD telephone. Then, you can type a message on the computer and send it to the telephone.

Documentation in accessible formats

Lenovo provides electronic documentation in accessible formats, such as properly tagged PDF files or HyperText Markup Language (HTML) files. Lenovo electronic documentation is developed to ensure that visually impaired users can read the documentation through a screen reader. Each image in the documentation also includes adequate alternative text so that visually impaired users can understand the image when they use a screen reader.

Cleaning the computer

CAUTION:
Remove any media from the drives and turn off all connected devices and the computer. Then, disconnect all power cords from electrical outlets and disconnect all cables that are connected to the computer.

It is a good practice to clean the computer periodically to protect the surfaces and ensure trouble-free operation. Use only mild cleaning solutions and a damp cloth to clean the painted surfaces of the computer.

Dust buildup compounds problems associated with glare, so remember to clean the screen periodically. Wipe the screen surface gently with a soft, dry cloth, or blow on the screen to remove grit and other loose particles. Depending on the type of the screen, moisten a soft, lint-free cloth with an LCD cleaner or liquid glass cleaner and then wipe the screen surface.

Maintenance

With appropriate care and maintenance, the computer will serve you reliably. This section provides information about maintaining the computer so that it can keep working in top order.

Basic maintenance tips

Here are some basic points about keeping the computer functioning properly:

- Keep the computer in a clean, dry environment. Ensure that the computer rests on a flat, steady surface.
- Do not cover any of air vents. These air vents provide airflow to keep the computer from overheating.
- Keep food and drinks away from all parts of the computer. Food particles and spills might make the keyboard and mouse stick and unusable.
- Do not get the power switches or other controls wet. Moisture can damage these parts and cause an electrical hazard.
- Always disconnect a power cord by grasping the plug instead of the cord.

Good maintenance practices

By performing a few good maintenance practices, you can maintain good computer performance, protect your data, and be prepared in case of a computer failure.

- Keep the computer software, device drivers, and operating system up-to-date. See “Keeping the computer current” on page 22.
- Empty your recycle bin on a regular basis.
- Clean out your Inbox, Sent Items, and Deleted Items folders in your e-mail application on a regular basis.

- Clean up files and free up storage drive space and memory space occasionally to prevent performance problems. See “Performance problems” on page 42.
- Keep a log book. Entries might include major software or hardware changes, device-driver updates, intermittent problems and what you did to resolve them, and other issues you might have experienced. The cause of a problem might be change in hardware, change in software, or any other actions that might have taken place. A log book can help you or a Lenovo technician determine the cause of a problem.
- Back up your data on the storage drive regularly. You can restore the storage drive from a backup.

  To back up your data, do one of the following:

  – For Windows 7: Open the Rescue and Recovery program. See “Accessing a program on the computer” on page 10. For more information about backing up your data, refer to the help system of the program.
  – For Windows 10: Right-click the Start button to open the Start context menu, and then click **Control Panel**. View Control Panel using large icons or small icons, and then click **File History**. Follow the instructions on the screen.
- Create a recovery medium as early as possible. You can use the recovery medium to recover your operating system even if Windows fails to start up.

  To create a recovery medium, do one of the following:

  – For Windows 7: Open the Create Recovery Media program. See “Accessing a program on the computer” on page 10. For more information about creating a recovery medium, refer to the help system of the program.
  – For Windows 10: Right-click the Start button to open the Start context menu, and then click **Control Panel**. View Control Panel using large icons or small icons, and then click **Recovery**. Follow the instructions on the screen.
- For Windows 7, create a rescue medium as early as possible. You can use the rescue medium to recover from failures that prevent you from gaining access to the Rescue and Recovery workspace on your storage drive.

  To create a rescue medium, open the Rescue and Recovery program. See “Accessing a program on the computer” on page 10. For more information about creating a rescue medium, refer to the help system of the program.

Keeping the computer current

In most cases, it is a good practice to have the most up-to-date operating system update patches, software programs, and device drivers. This section provides information about how to get the latest updates for the computer.

Getting the latest device drivers

Attention: Reinstalling device drivers will change the current configuration of the computer.

To get the latest device drivers for the computer, do one of the following:

- Download the device drivers that are preinstalled on the computer. Go to http://www.lenovo.com/drivers.
- Use the Lenovo program or Windows Update. See “Getting the latest system updates” on page 22.

  Note: The device drivers provided by Windows Update might not be tested by Lenovo. It is recommended that you get device drivers from Lenovo.

Getting the latest system updates

To get the latest system updates for the computer, ensure that the computer is connected to the Internet and do one of the following:

- Use one of the following Lenovo programs to get the system updates:

- For Windows 7: Use the System Update program.
- For Windows 10: Use the Lenovo Companion program.

To open the System Update or Lenovo Companion program, see “Accessing a program on the computer” on page 10. For more information about using the program, refer to the help system of the program.

- Use Windows Update to get the system updates.
  1. Click the Start button to open the Start menu.
  2. Depending on your Windows version, do one of the following:
     - For Windows 7: Click **Control Panel**. View Control Panel using large icons or small icons, and then click **Windows Update**.
     - For Windows 10: Click **Settings → Update & security → Windows Update**.
  3. Follow the instructions on the screen.

Moving the computer

Before moving the computer, take the following precautions:

1. Back up your data on the storage drive. See “Good maintenance practices” on page 21.
2. Remove any media from the drives and turn off all connected devices and the computer. Then, disconnect all power cords from electrical outlets and disconnect all cables that are connected to the computer.
3. If you saved the original shipping cartons and packing materials, use them to pack the units. If you are using different cartons, cushion the units to avoid damage.

Moving the computer to another country or region

When you move the computer to another country or region, you must take local electrical standards into consideration. If the local electrical outlet style is different from the type you are currently using, contact the Lenovo Customer Support Center to purchase either an electrical plug adapter or a new power cord. For a list of Lenovo Support phone numbers, go to http://www.lenovo.com/support/phone. If you cannot find the support telephone number for your country or region, contact your Lenovo reseller.

Chapter 4. Security

This chapter contains the following topics:

- “Locking the computer” on page 25
- “Viewing and changing security settings in the Setup Utility program” on page 26
- “Preventing unauthorized access to the computer” on page 26
- “Using the cover presence switch” on page 27
- “Using and understanding firewalls” on page 27
- “Protecting data against viruses” on page 27
- “Computrace Agent software embedded in firmware” on page 28
- “Trusted Platform Module (TPM)” on page 28

Locking the computer

This section provides information about locking the computer with the locking devices to keep the computer safe.

© Copyright Lenovo 2016, 2017

Attaching a Kensington-style cable lock

You can use a Kensington-style cable lock to secure your computer to a desk, table, or other non-permanent fixture. The cable lock connects to the security-lock slot at the rear of your computer. Depending on the type selected, the cable lock can be operated with a key or combination. The cable lock also locks the buttons used to open the computer cover. This is the same type of lock used with many notebook computers. You can order such a cable lock directly from Lenovo by searching for *Kensington* at:
http://www.lenovo.com/support

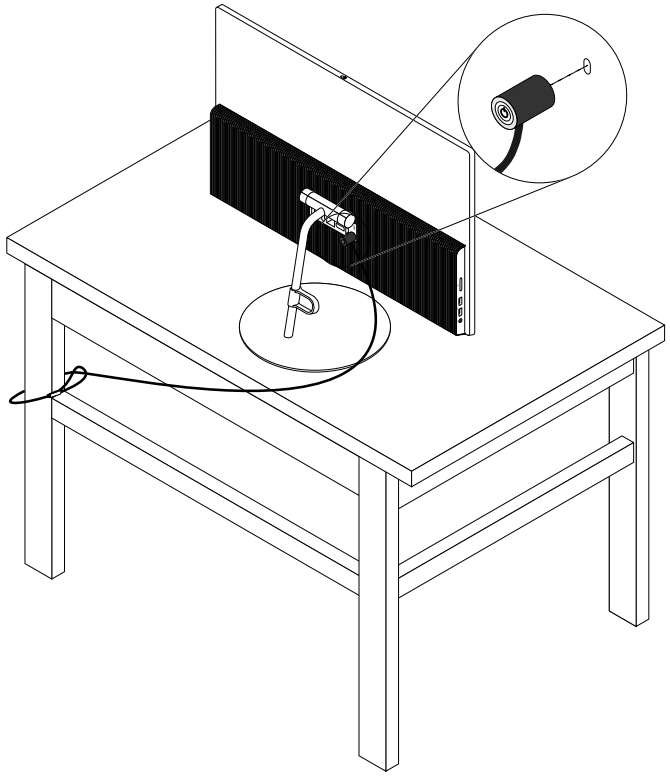

Figure 7. Kensington-style cable lock

Viewing and changing security settings in the Setup Utility program

To view and change security settings in the Setup Utility program, do the following:

1. Start the Setup Utility program. See “Starting the Setup Utility program” on page 29.
2. Select **Security**.
3. Follow the instructions on the right side of the screen to view and change security settings. You can refer to “Using the Setup Utility program” on page 29 to get basic information about some major security settings.
4. Exit the Setup Utility program. See “Exiting the Setup Utility program” on page 33.

Preventing unauthorized access to the computer

You can use BIOS passwords and Windows accounts to prevent unauthorized access to the computer and data.

- To use BIOS passwords, see “Using BIOS passwords” on page 31.
- To use Windows accounts, do the following:

1. Click the Start button to open the Start menu.
2. Depending on your Windows version, do one of the following:
   - For Windows 7: Click **Control Panel → User Accounts**.
   - For Windows 10: Click **Settings → Accounts**.
3. Follow the instructions on the screen.

Using the cover presence switch

The cover presence switch prevents the computer from logging in to the operating system when the computer cover is not properly installed or closed.

To enable the cover-presence-switch connector on the system board, do the following:

1. Start the Setup Utility program. See “Starting the Setup Utility program” on page 29.
2. Select **Security → Chassis Intrusion Detection** and press Enter.
3. Select **Enabled** and press Enter.
4. Exit the Setup Utility program. See “Exiting the Setup Utility program” on page 33.

When the cover-presence-switch connector on the system board is enabled, if the cover presence switch detects that the computer cover is not correctly installed or closed, an error message will be displayed when you turn on the computer. To bypass the error message and log in to the operating system, do the following:

1. Properly install or close the computer cover.
2. Start and then exit the Setup Utility program. See “Starting the Setup Utility program” on page 29 and “Exiting the Setup Utility program” on page 33.

Using and understanding firewalls

A firewall can be hardware, software, or a combination of both depending on the level of security required. Firewalls work on a set of rules to determine which inbound and outbound connections are authorized. If the computer is preinstalled with a firewall program, it helps protect against computer Internet security threats, unauthorized access, intrusions, and Internet attacks. It also protects your privacy. For more information about how to use the firewall program, refer to the help system of your firewall program.

To use Windows Firewall, do the following

1. Depending on your Windows version, do one of the following:
   - For Windows 7: Click **Control Panel** on the Start menu.
   - For Windows 10: Click the Start button to open the Start menu, and then click **Windows System → Control Panel**.
2. View Control Panel using large icons or small icons, and then click **Windows Firewall**.
3. Follow the instructions on the screen.

Protecting data against viruses

The computer is preinstalled with an antivirus program to help you guard against, detect, and eliminate viruses.

Lenovo provides a full version of antivirus software on the computer with a free 30-day subscription. After 30 days, you must renew the license to continue receiving the antivirus software updates.

Note: Virus definition files must be kept up-to-date to guard against new viruses.

For more information about how to use your antivirus software, refer to the help system of your antivirus software.

Computrace Agent software embedded in firmware

The Computrace Agent software is an IT asset management and computer theft recovery solution. The software detects if changes have been made on the computer, such as hardware, software, or the computer call-in location. You might have to purchase a subscription to activate the Computrace Agent software.

Trusted Platform Module (TPM)

TPM is a secure cryptoprocessor that can store cryptographic keys that protect information stored in the computer.

Chapter 5. Advanced configuration

This chapter contains the following topics:

- “Using the Setup Utility program” on page 29
- “Updating the BIOS” on page 33

Using the Setup Utility program

The Setup Utility program is used to view and change the configuration settings of the computer. This section provides information about only the major configuration settings available in the program.

Note: The operating system settings might override any similar settings in the Setup Utility program.

Starting the Setup Utility program

To start the Setup Utility program, do the following:

1. Turn on or restart the computer.
2. Before Windows starts up, repeatedly press and release the F1 key until the Setup Utility program opens. If a BIOS password has been set, the Setup Utility program will not open until you enter the correct password. For more information, see “Using BIOS passwords” on page 31.

   Note: For some keyboards, you might need to press Fn+F1 to open the Setup Utility program.

To view and change the configuration settings, follow the instructions on the right side of the screen. The keys used to perform various tasks are displayed at the bottom of the screen.

Enabling or disabling a device

This section provides information about how to enable or disable user access to hardware devices (such as USB connectors or storage drives).

To enable or disable a device, do the following:

1. Start the Setup Utility program. See “Starting the Setup Utility program” on page 29.
2. Select **Devices**.
3. Select the device you want to enable or disable and press Enter.
4. Select the desired setting and press Enter.
5. Exit the Setup Utility program. See “Exiting the Setup Utility program” on page 33.

Enabling or disabling the Automatic Power On features

If you enable the Automatic Power On features, the computer will start up automatically.

To enable or disable the Automatic Power On features, do the following:

1. Start the Setup Utility program. See “Starting the Setup Utility program” on page 29.
2. Select **Power → Automatic Power On** and press Enter.
3. Select the feature you want to enable or disable and press Enter.
4. Select the desired setting and press Enter.
5. Exit the Setup Utility program. See “Exiting the Setup Utility program” on page 33.

© Copyright Lenovo 2016, 2017

Enabling or disabling the ErP LPS compliance mode

Lenovo computers meet the eco-design requirements of the ErP Lot 3 regulation. For more information, go to:
http://www.lenovo.com/ecodeclaration

You can enable the ErP LPS compliance mode in the Setup Utility program to reduce the consumption of electricity when the computer is off or in sleep mode.

To enable or disable the ErP LPS compliance mode, do the following:

1. Start the Setup Utility program. See “Starting the Setup Utility program” on page 29.
2. Select **Power → Enhanced Power Saving Mode** and press Enter.
3. Depending on whether you select **Enabled** or **Disabled**, do one of the following:
   - If you select **Enabled**, press Enter. Then, disable the Wake on LAN feature. See “Enabling or disabling the Automatic Power On features” on page 29.
   - If you select **Disabled**, press Enter. Then, go to the next step.
4. Exit the Setup Utility program. See “Exiting the Setup Utility program” on page 33.

When the ErP LPS compliance mode is enabled, you can wake up the computer by doing one of the following:

- Press the power button.
- Enable the Wake Up on Alarm feature to make the computer wake up at a set time. See “Enabling or disabling the Automatic Power On features” on page 29.
- Enable the After Power Loss feature to make the computer wake up when the power supply resumes after a sudden loss of electricity.
  1. Start the Setup Utility program. See “Starting the Setup Utility program” on page 29.
  2. Select **Power → After Power Loss** and press Enter.
  3. Select **Power On** and press Enter.
  4. Exit the Setup Utility program. See “Exiting the Setup Utility program” on page 33.

In the Windows 10 operating systems, you also need to disable the Fast Startup function to meet the off mode requirement of ErP compliance.

To disable the Fast Startup function, do the following:

1. Click the Start button to open the Start menu, and then click **Windows System → Control Panel**.
2. Select **All Control Panel Items → Power Options**.
3. Select **Choose what the power buttons do** from the pop-up dialog box.
4. Select the **Change settings that are currently unavailable** option, and clear the **Turn on fast startup** option from the **Shutdown settings** list.

Enabling or disabling the Configuration Change Detection feature

If you enable the Configuration Change Detection feature, when the POST detects the configuration changes of some hardware devices (such as storage drives or memory modules), an error message will be displayed when you turn on the computer.

To enable or disable the Configuration Change Detection feature, do the following:

1. Start the Setup Utility program. See “Starting the Setup Utility program” on page 29.
2. Select **Security → Configuration Change Detection** and press Enter.

3. Select the desired setting and press Enter.
4. Exit the Setup Utility program. See “Exiting the Setup Utility program” on page 33.

To bypass the error message and log in to the operating system, do one of the following:

- Press the F2 key.

  Note: For some keyboards, you might need to press Fn+F2 to bypass the error message.
- Start and then exit the Setup Utility program. See “Starting the Setup Utility program” on page 29 and “Exiting the Setup Utility program” on page 33.

Using BIOS passwords

By using the Setup Utility program, you can set passwords to prevent unauthorized access to the computer and data.

You do not have to set any passwords to use the computer. However, using passwords improves computer security. If you decide to set any passwords, read the following topics.

Setup Utility program password types

The following types of passwords are available:

- Power-on password
  When a power-on password is set, you are prompted to enter a valid password each time the computer is turned on. The computer cannot be used until the valid password is entered.
- Administrator password
  Setting an administrator password deters unauthorized users from changing configuration settings. If you are responsible for maintaining the configuration settings of several computers, you might want to set an administrator password.

  When an administrator password is set, you are prompted to enter a valid password each time you try to access the Setup Utility program. The Setup Utility program cannot be accessed until a valid password is entered.

  If both the power-on password and administrator password are set, you can enter either password. However, you must use your administrator password to change any configuration settings.
- Hard disk password
  Setting a hard disk password prevents unauthorized access to the data on the storage drive. When a hard disk password is set, you are prompted to enter a valid password each time you try to access the storage drive.

  Notes:

  – After you set a hard disk password, your data on the storage drive is protected even if the storage drive is removed from one computer and installed in another.

  – If the hard disk password is forgotten, there is no way to reset the password or recover data from the storage drive.

Password considerations

A password can be any combination of up to 64 alphabetic and numeric characters. For security reasons, it is recommended to use a strong password that cannot be easily compromised.

Note: The Setup Utility program passwords are not case sensitive.

To set a strong password, consider the following guidelines:

- Have at least eight characters in length

- Contain at least one alphabetic character and one numeric character
- Not be your name or your user name
- Not be a common word or a common name
- Be significantly different from your previous passwords

Setting, changing, and deleting a password

To set, change, or delete a password, do the following:

1. Start the Setup Utility program. See “Starting the Setup Utility program” on page 29.
2. Select **Security**.
3. Depending on the password type, select **Set Power-On Password**, **Set Administrator Password**, or **Hard Disk Password** and press Enter.
4. Follow the instructions on the right side of the screen to set, change, or delete a password.

   Note: A password can be any combination of up to 64 alphabetic and numeric characters. For more information, see “Password considerations” on page 31.
5. Exit the Setup Utility program. See “Exiting the Setup Utility program” on page 33.

Selecting a startup device

If the computer does not start up from a device as expected, you can choose to change the startup device sequence permanently or select a temporary startup device.

Changing the startup device sequence permanently

To change the startup device sequence permanently, do the following:

1. Depending on the type of the storage device, do one of the following:
   - If the storage device is internal, go to step 2.
   - If the storage device is a disc, ensure that the computer is on or turn on the computer. Then, insert the disc into the optical drive.
   - If the storage device is an external device other than a disc, connect the storage device to the computer.
2. Start the Setup Utility program. See “Starting the Setup Utility program” on page 29.
3. Select **Startup**.
4. Follow the instructions on the right side of the screen to change the startup device sequence.
5. Exit the Setup Utility program. See “Exiting the Setup Utility program” on page 33.

Selecting a temporary startup device

Note: Not all discs and storage drives are bootable.

To select a temporary startup device, do the following:

1. Depending on the type of the storage device, do one of the following:
   - If the storage device is internal, go to step 2.
   - If the storage device is a disc, ensure that the computer is on or turn on the computer. Then, insert the disc into the optical drive.
   - If the storage device is an external device other than a disc, connect the storage device to the computer.
2. Turn on or restart the computer. Before Windows starts up, repeatedly press and release the F12 key until Startup Device Menu is displayed.

Note: For some keyboards, you might need to press Fn+F12 to display Startup Device Menu.

3. Select the desired storage device and press Enter. The computer will start up from the device you select.

If you want to select a permanent startup device, select **Enter Setup** on Startup Device Menu and press Enter to start the Setup Utility program. For more information about how to select a permanent startup device, see “Changing the startup device sequence permanently” on page 32.

Exiting the Setup Utility program

To exit the Setup Utility program, do one of the following:

- If you want to save the new settings, press the F10 key. Then, select **Yes** in the window displayed and press Enter.

  Note: For some keyboards, you might need to press Fn+F10 to exit the Setup Utility program.
- If you do not want to save the new settings, select **Exit → Discard Changes and Exit** and press Enter. Then, select **Yes** in the window displayed and press Enter.

Updating the BIOS

When you install a new program, hardware device, or device driver, you might be informed to update the BIOS. You can update the BIOS from your operating system or a flash update disc (supported only on some models).

To update the BIOS, do the following:

1. Go to http://www.lenovo.com/drivers.
2. Download the flash BIOS update driver for the operating system version or the ISO image version (used to create a flash update disc). Then, download the installation instructions for the flash BIOS update driver you download.
3. Print the installation instructions you download and follow the instructions to update the BIOS.

Chapter 6. Troubleshooting, diagnostics, and recovery

This chapter provides solutions to resolve the computer problems. Follow the steps in the basic procedure for resolving computer problems, which helps you make good use of the troubleshooting, diagnostics, and recovery information.

- “Basic procedure for resolving computer problems” on page 35
- “Troubleshooting” on page 35
- “Diagnostics” on page 44
- “Recovery information” on page 44

Basic procedure for resolving computer problems

It is recommended that you use the following procedure to resolve computer problems you are experiencing:

1. Ensure that:
   a. The cables for all connected devices are connected correctly and securely.
   b. All connected devices that require ac power are connected to properly grounded, functioning electrical outlets.
   c. All connected devices are enabled in the BIOS settings of the computer. See “Enabling or disabling a device” on page 29.

   If these actions do not resolve your problem, continue with the next step.
2. Use an antivirus program to see if the computer has been infected by a virus. If the program detects a virus, remove the virus. If the antivirus program does not resolve your problem, continue with the next step.
3. Go to “Troubleshooting” on page 35 and follow the instructions for the type of problem you are experiencing. If these troubleshooting instructions do not resolve your problem, continue with the next step.
4. Run the diagnostic program. See “Diagnostics” on page 44. If the diagnostic program does not resolve your problem, continue with the next step.
5. Recover your operating system. See “Recovery information” on page 44.
6. If none of these actions solve your problem, contact the Lenovo Customer Support Center. For a list of Lenovo Support phone numbers, go to http://www.lenovo.com/support/phone. For more information about help, service, and technical assistance, see Chapter 8 “Getting information, help, and service” on page 57.

Troubleshooting

Attention: Do not open the computer or attempt any repair before reading and understanding “Read this first: Important safety information” in this document.

Use the troubleshooting information to find solutions to problems that have definite symptoms.

Startup problems

This section provides solutions to startup-related problems.

The computer does not start up when you press the power button

Solutions: Ensure that:

- The power cord is correctly connected to the rear of the computer and to a working electrical outlet.

© Copyright Lenovo 2016, 2017

- If the computer has a secondary power switch on the rear of the computer, ensure that it is switched on.
- The power indicator on the front of the computer is on.
- The computer voltage matches the voltage available at the electrical outlet for your country or region.

The operating system fails to start up

Solution: Ensure that the startup sequence includes the device where the operating system resides. Usually, the operating system is on the storage drive. For more information, see “Changing the startup device sequence permanently” on page 32.

The computer beeps multiple times before the operating system starts up

Solution: Ensure that no keys are stuck.

Audio problems

This section provides solutions to audio-related problems.

No audio in Windows

Solutions:

- If you are using powered external speakers that have an On/Off control, ensure that:
  - The On/Off control is set to the **On** position.
  - The speaker power cable is connected to a properly grounded, functional ac electrical outlet.
- If your external speakers have a volume control, ensure that the volume is not set too low.
- Click the volume icon in the Windows notification area on the taskbar. Ensure that the mute speakers settings are not selected and none of the volume settings is set too low.

  Note: If the volume icon is not displayed in the Windows notification area, add the icon to the notification area. See “Adding an icon to the Windows notification area” on page 14.
- Some models have a front audio panel you can use to adjust volume. If you have a front audio panel, ensure that the volume is not set too low.
- Ensure that your external speakers (and headphones, if used) are connected to the correct audio connector on the computer. Most speaker cables are color-coded to match the connector.

  Note: When external-speaker or headphone cables are connected to the audio connector, the internal speaker, if present, is disabled. In most cases, if an audio adapter is installed in one of the expansion slots, the audio function built into the system board is disabled. Therefore, you must use the audio connectors on the audio adapter.
- Ensure that the program you are running is designed for use in the Microsoft Windows operating system. If the program is designed to run in DOS, the program does not use the Windows sound feature. The program must be configured to use SoundBlaster Pro or SoundBlaster emulation.
- Ensure that the audio device drivers are correctly installed.

Sound comes only from one external speaker

Solutions:

- Ensure that the speaker cable is inserted completely into the connector on the computer.
- Ensure that the cable that connects the left speaker to the right speaker is securely connected.
- Depending on your Windows version, do one of the following:
  - For Windows 7: Click the volume icon in the Windows notification area on the taskbar. Then, click the speaker icon on top of the volume control.

– For Windows 10: Right-click the volume icon in the Windows notification area on the taskbar. Then, click **Open Volume Mixer** and select the desired speaker.

Note: If the volume icon is not displayed in the Windows notification area, add the icon to the notification area. See “Adding an icon to the Windows notification area” on page 14.

Then, click the **Levels** tab and ensure that the Balance settings are set correctly.

CD problems

This section provides solutions to CD-related problems.

A CD or DVD does not work

Solutions:

- If you have multiple CD or DVD drives installed (or a combination of CD and DVD drives), try inserting the disc into the other drive. In some cases, only one of the drives is connected to the audio subsystem.
- Ensure that the disc is inserted correctly, with its label up.
- Ensure that the disc you are using is clean. To remove dust or fingerprints, wipe the disc clean with a soft cloth from the center to the outside. Wiping a disc in a circular motion might cause loss of data.
- Ensure that the disc you are using is not scratched or damaged. Try inserting another disc that you know is good. If you cannot read from a known-good disc, you might have a problem with your optical drive or the cabling to your optical drive. Ensure that the power cable and signal cable are securely connected to the drive.

Unable to use a bootable recovery medium, such as the Product Recovery CD, to start the computer

Solution: Ensure that the CD or DVD drive is in the startup sequence before the storage drive. Refer to “Selecting a temporary startup device” on page 32 for information on viewing and changing the startup sequence. Note that on some models the startup sequence is permanently set and cannot be changed.

DVD problems

This section provides solutions to DVD-related problems.

Black screen instead of DVD video

Solutions:

- Restart the DVD player program.
- Try a lower screen resolution or color depth.
- Close any open files, and then restart the computer.

DVD movie does not play

Solutions:

- Ensure that the disc surface is clean and not scratched.
- Check the disc or package for regional coding. You might need to purchase a disc with coding for the region where you are using the computer.

No audio or intermittent audio while playing a DVD movie

Solutions:

- Check the volume control settings on the computer and on your speakers.
- Ensure that the disc surface is clean and not scratched.

- Check all cable connections to and from the speakers.
- Use the DVD menu for the video to select a different audio track.

Playback is slow or choppy

Solutions:

- Disable any background programs, such as AntiVirus or Desktop Themes.
- Ensure that video resolution is set to less than 1152 x 864 pixels.

Invalid disc or no disc found message

Solutions:

- Ensure that a DVD disc is in the drive with the shiny side of the disc facing down.
- Ensure that video resolution is set to less than 1152 x 864 pixels.
- On computers that have a CD-ROM or CD-RW drive in addition to a DVD-ROM drive, ensure that the DVD disc is in the drive labeled “DVD”.

Intermittent problems

Some problems occur only occasionally and are difficult to repeat.

Solutions:

- Ensure that all cables and cords are securely connected to the computer and connected devices.
- Ensure that when the computer is on, the fan grill is not blocked (there is air flow around the grill), and the fans are working. If airflow is blocked or the fans are not working, the computer might overheat.
- If Small Computer System Interface (SCSI) devices are installed, ensure that the last external device in each SCSI chain is terminated correctly. For more information, see your SCSI documentation.

Storage drive problems

Select your symptom from the following list:

- “Some or all storage drives missing from the Setup Utility program” on page 38
- ““No Operating System Found" message or the system not starting up from the correct storage drive” on page 38

Some or all storage drives missing from the Setup Utility program

Symptom: Some or all storage drives missing from the Setup Utility program

Solutions:

- Ensure that all storage drive signal cables and power cables are connected correctly.
- Ensure that the computer is configured correctly to support the storage drives.
  - If the computer is installed with five SATA storage drives, ensure that the SATA storage drive enablement module (one to five storage drives) is installed.
  - If the computer is installed with SAS storage drives, ensure that the SAS storage drive enablement module (one to five storage drives) or the LSI MegaRAID SAS adapter is installed.

"No Operating System Found" message or the system not starting up from the correct storage drive

Symptom: "No Operating System Found" message or the system not starting up from the correct storage drive

Solutions:

- Ensure that all storage drive signal cables and power cables are connected correctly.
- Ensure that the storage drive the computer starts up from is listed as the first startup device in the Setup Utility program. Refer to “Changing the startup device sequence permanently” on page 32.

Note: In rare cases, the storage drive with the operating system might get corrupted or damaged. In such cases, you might need to replace the storage drive.

Screen problems

This section provides solutions to screen-related problems.

My screen goes blank while the computer is on

Solutions:

- The computer voltage matches the voltage available at the electrical outlet for your country or region.
- Press a key to exit the screen saver.
- Press the power button to resume the computer from sleep or hibernation mode.
- The brightness and contrast is set correctly.
- If the screen goes blank when I start some application programs, install the device drivers for the application programs. Refer to the documentation for the affected application program to check whether any device drivers are required.

The image appears to be flickering

Solutions:

- The screen might be affected by interference from nearby equipment. Magnetic fields around other devices, such as transformers, appliances, fluorescent lights, and other monitors might be causing the problem. Move fluorescent desk lighting or any equipment that produces magnetic fields farther away from the screen. If this does not correct the problem, turn off the computer. Then, adjust the placement of the computer and other devices so that they are at least 305 mm (12 inches) apart. Turn on the computer.
- Reset the refresh rate supported by the computer.
  1. Right-click a blank area on the desktop.
  2. Depending on your Windows version, do one of the following:
     - For Windows 7: Click **Screen resolution** → **Advanced settings**.
     - For Windows 10: Click **Display settings**. On the **Display** tab, click **Advanced display settings** → **Display adapter properties**.
  3. Click the **Monitor** tab, and then reset the refresh rate to be the highest and noninterlaced.

The image is discolored

Solution: The screen might be affected by interference from nearby equipment. Move fluorescent desk lighting or any equipment that produces magnetic fields further away from the screen. If the problem persists, do the following:

1. Turn off the computer.
2. Adjust the placement of the computer and other devices so that they are at least 305 mm (12 inches) apart.
3. Turn on the computer.

Networking problems

This section provides solutions to networking-related problems.

Ethernet LAN problems

My computer cannot be connected to an Ethernet LAN

Solutions:

- Connect the cable from the Ethernet connector to the RJ45 connector of the hub.
- Enable the Ethernet LAN feature in the Setup Utility program. See “Starting the Setup Utility program” on page 29. Then, follow the instructions on the screen.
- Enable the Ethernet LAN adapter.
  1. Depending on your Windows version, do one of the following:
     - For Windows 7: Click **Control Panel** on the Start menu.
     - For Windows 10: Click the Start button to open the Start menu, and then click **Windows System → Control Panel**.
  2. View Control Panel using large icons or small icons, and then click **Network and Sharing Center → Change adapter settings**.
  3. Right-click the Ethernet LAN adapter icon and click **Enable**.
- Update or reinstall the Ethernet LAN driver. See “Keeping the computer current” on page 22.
- Install all networking software that is necessary for your network environment. Check with your LAN administrator for the necessary networking software.
- Set the same duplex for the switch port and the adapter. If you configured the adapter for full duplex, ensure that the switch port is also configured for full duplex. Setting the wrong duplex mode might degrade performance, cause data loss, or result in lost connections.

My computer is a Gigabit Ethernet model and I use a speed of 1000 Mbps, but the connection fails or errors occur

Solution: Connect the network cable to the Ethernet connector using Category 5 wiring and a 100 BASE-T hub/switch (not 100 BASE-X).

My computer is a Gigabit Ethernet model, but it cannot be connected to the network at 1000 Mbps, but at only 100 Mbps

Solutions:

- Try another cable.
- Set the link partner to auto-negotiate.
- Set the switch to be 802.3ab-compliant (gigabit over copper).

The Wake On LAN feature does not work

Solution: Enable the Wake On LAN (WOL) feature in the Setup Utility program. See “Starting the Setup Utility program” on page 29. Then, follow the instructions on the screen.

Wireless LAN problem

Note: The wireless LAN feature is optional.

The wireless LAN feature does not work

Solutions:

- Enable the wireless LAN feature in the Setup Utility program. See “Starting the Setup Utility program” on page 29. Then, follow the instructions on the screen.
- For Windows 10, enable the wireless LAN feature in Windows Settings. Click the Start button to open the Start menu, and then click **Settings → Network & Internet → Wi-Fi**. Turn on the Wi-Fi feature.
- Enable the wireless LAN adapter.
  1. Depending on your Windows version, do one of the following:
     – For Windows 7: Click **Control Panel** on the Start menu.
     – For Windows 10: Click the Start button to open the Start menu, and then click **Windows System → Control Panel**.
  2. View Control Panel using large icons or small icons, and then click **Network and Sharing Center → Change adapter settings**.
  3. Right-click the wireless LAN adapter icon and click **Enable**.
- Update or reinstall the wireless LAN driver. See “Keeping the computer current” on page 22.

Bluetooth problems

Note: The Bluetooth feature is optional.

The Bluetooth feature does not work

Solutions:

- Enable the Bluetooth feature in the Setup Utility program. See “Starting the Setup Utility program” on page 29. Then, follow the instructions on the screen.
- Turn on the Bluetooth radios.
  1. Depending on your Windows version, do one of the following:
     – For Windows 7: Click the Start button to open the Start menu. Right-click **Computer**, and then click **Properties**.
     – For Windows 10: Right-click the Start button to open the Start context menu.
  2. Click **Device Manager**. Type the administrator password or provide confirmation if prompted.
  3. Right-click the desired Bluetooth radios under **Bluetooth** or **Bluetooth Radios**, and then do one of the following:
     – For Windows 7: Click **Enable**.
     – For Windows 10: Click **Enable device**.
- Enable the Bluetooth adapter.
  1. Depending on your Windows version, do one of the following:
     – For Windows 7: Click **Control Panel** on the Start menu.
     – For Windows 10: Click the Start button to open the Start menu, and then click **Windows System → Control Panel**.
  2. View Control Panel using large icons or small icons, and then click **Network and Sharing Center → Change adapter settings**.
  3. Right-click the Bluetooth adapter icon and click **Enable**.
- Update or reinstall the Bluetooth driver. See “Keeping the computer current” on page 22.

Sound does not come from the Bluetooth headset or headphones

Solution: Set the Bluetooth headset or headphones as the default device.

1. Exit the application that uses the sound device (for example, Windows Media Player).
2. Right-click the volume icon in the Windows notification area on the taskbar.

Note: If the volume icon is not displayed in the Windows notification area, add the icon to the notification area. See “Adding an icon to the Windows notification area” on page 14.

3. Click **Playback devices**.
4. If you are using the Headset profile, select **Bluetooth Hands-free Audio**, and then click **Set Default**. If you are using the AV profile, select **Stereo Audio**, and then click **Set Default**.
5. Click **OK**.

Performance problems

This section provides solutions to performance-related problems of the computer.

Excessive number of fragmented files

Solution: Use the Windows disk defragmentation or disk optimization feature to clean up the files.

Note: Depending on the volume of the storage drives and amount of data stored on the storage drives, the disk-defragmentation process might take up to several hours.

1. Close any open programs and windows.
2. Click the Start button to open the Start menu.
3. Depending on your Windows version, do one of the following:
   - For Windows 7: Click **Computer**.
   - For Windows 10: Click **Windows System** → **File Explorer** → **This PC**.
4. Right-click your C drive and then click **Properties**.
5. Click the **Tools** tab.
6. Depending on your Windows version, do one of the following:
   - For Windows 7: Click **Defragment now**.
   - For Windows 10: Click **Optimize**. Select the desired drive, and then click **Optimize**.
7. Follow the instructions on the screen.

Insufficient free storage drive space

Solutions: Free up storage drive space.

- Clean out your Inbox, Sent Items, and Deleted Items folders from your e-mail application.
- Clean up your C drive.
  1. Click the Start button to open the Start menu.
  2. Depending on your Windows version, do one of the following:
     – For Windows 7: Click **Computer**.
     – For Windows 10: Click **Windows System** → **File Explorer** → **This PC**.
  3. Right-click your C drive and then click **Properties**.
  4. Check the amount of free space, and then click **Disk Cleanup**.
  5. A list of unnecessary file categories is displayed. Select each file category you want to delete, and then click **OK**.
- Turn some Windows features off or remove some unnecessary programs.
  1. Depending on your Windows version, do one of the following:
     – For Windows 7: Click **Control Panel** on the Start menu.
     – For Windows 10: Click the Start button to open the Start menu, and then click **Windows System** → **Control Panel**.

2. View Control Panel using large icons or small icons, and then click **Programs and Features**.
3. Do one of the following:
   - To turn some Windows features off, click **Turn Windows features on or off**. Follow the instructions on the screen.
   - To remove some unnecessary programs, select the program you want to remove, and then click **Uninstall/Change** or **Uninstall**.

Insufficient free memory space

Solutions:

- Right-click a blank area on the taskbar and open Task Manager. Then, end some tasks you are not performing.
- Install additional memory modules. To purchase memory modules, go to http://www.lenovo.com.

Serial connector cannot be accessed

Solutions:

- Connect the serial cable to the serial connector on the computer and to the serial device. If the serial device has its own power cord, connect the power cord to a grounded electrical outlet.
- Turn on the serial device and keep the device online.
- Install any application programs supplied with the serial device. Refer to the documentation that comes with the serial device for more information.
- If you added one serial-connector adapter, install the adapter correctly.

USB device problems

This section provides solutions to USB device-related problems.

My USB device cannot be accessed

Solutions:

- Connect the USB cable from the USB connector to the USB device. If the USB device has its own power cord, connect the power cord to a grounded electrical outlet.
- Turn on the USB device and keep the device online.
- Install any device drivers or application programs supplied with the USB device. Refer to the documentation that comes with the USB device for more information.
- Detach and reconnect the USB connector to reset the USB device.

I cannot install the Windows 7 operating system using an external USB device

Solution: Go to http://www.lenovo.com/support to download and install USB drivers.

Software and driver problems

This section provides solutions to software- and driver-related problems.

For some programs, dates cannot be sorted in correct order

Solution: Some programs developed before the year 2000 use only the last two digits of a year to sort dates, assuming the first two digits are 19. Consequently, dates cannot be sorted in correct order nowadays. Check with your software manufacturer to see if any updates are available. Many software manufacturers make updates available from the World Wide Web.

Some application programs do not work as expected

Solutions:

1. Check whether the problem is caused by an application program.
   a. Ensure that the software is compatible with the computer. Refer to the information supplied with the software for more information.
   b. Verify that other software works correctly on the computer.
   c. Verify that the software you are using works on another computer.
2. If the problem is caused by an application program:
   - Refer to the printed documentation that comes with the program or the help system of the program.
   - Update the program. See “Keeping the computer current” on page 22.
   - Uninstall the program and then reinstall it. To download a program that is preinstalled on the computer, go to http://www.lenovo.com/support and follow the instructions on the screen.

A device does not work normally due to device driver problems

Solution: Update the device driver. See “Keeping the computer current” on page 22.

Diagnostics

Note: If you are using a Windows operating system other than Windows 7 or Windows 10, go to http://www.lenovo.com/diags for the diagnostics information for the computer.

The diagnostic program is used to test hardware components of the computer. The diagnostic program also can report operating-system-controlled settings that interfere with the correct operation of the computer.

Lenovo Solution Center

The Lenovo Solution Center program is the diagnostic program preinstalled on the computer. The program enables you to troubleshoot and resolve computer problems. It combines diagnostic tests, system information collection, security status, and support information, along with hints and tips for maximum system performance.

To open the Lenovo Solution Center program, see “Accessing a program on the computer” on page 10. For more information about using the program, refer to the help system of the program.

If you are unable to isolate and repair the problem yourself after running Lenovo Solution Center, save and print the log files created by the program. You might need the log files when you speak to a Lenovo technical support representative.

Recovery information

This section provides instructions about how to recover your operating system.

Note: If a device does not work normally after recovering the operating system, update the device driver. See “Keeping the computer current” on page 22.

Recovery information for Windows 7

To recover your Windows 7 operating system, use the following solutions:

- Use Windows recovery solutions.
  - Use System Restore to restore system files and settings to an earlier point.
    1. Click the Start button to open the Start menu.

2. Click **Control Panel**. View Control Panel using large icons or small icons, and then click **Recovery → Open System Restore**.
3. Follow the instructions on the screen.

– Use the Windows recovery environment by doing one of the following:
  – After several consecutive failed boot attempts, the Windows recovery environment might start automatically. Follow the instructions on the screen to choose the appropriate recovery solution.
  – Turn on or restart the computer. Then, repeatedly press and release the F8 key until the Advanced Boot Options window opens. Select **Repair Your Computer**, press Enter, and follow the instructions on the screen to choose the appropriate recovery solution.

    Note: For some keyboards, you might need to press Fn+F8 to open the Advanced Boot Options window.

- Use the Rescue and Recovery program to restore the storage drive from a backup, or restore the C drive to the factory-default settings.

  Notes:

  – Depending on the computer model, the Rescue and Recovery program might not be preinstalled. You need to installed it manually earlier.
  – If you use the Rescue and Recovery program to restore the storage drive from a backup, ensure that you backed up your data earlier with the program.

  To use the Rescue and Recovery program, do one of the following:

  – Open the Rescue and Recovery program. See “Accessing a program on the computer” on page 10. For more information about using the program, refer to the help system of the program.
  – Open the Rescue and Recovery workspace.
    1. Turn off the computer. Press and hold the Enter key and then turn on the computer. Release the Enter key when Startup Interrupt Menu is displayed. Then, press F11 to open the Rescue and Recovery workspace.
    2. If the Rescue and Recovery workspace fails to open, use the rescue medium you created earlier to resolve the problem. Select the rescue medium as the startup device. See “Selecting a temporary startup device” on page 32. When the rescue medium starts, the Rescue and Recovery workspace opens. Follow the instructions on the screen.
- Use the recovery medium you created earlier with the Create Recovery Media program to restore only the C drive or the entire storage drive to the factory-default settings.

  Note: To create a recovery medium, see “Good maintenance practices” on page 21.

  1. Select the recovery medium as the startup device. See “Selecting a temporary startup device” on page 32.
  2. Follow the instructions on the screen to choose the appropriate recovery solution.
- Use the recovery disc set provided by Lenovo to restore the entire storage drive to the factory-default settings.
  – If the computer comes with the recovery disc set, follow the instructions shipped with the disc set.
  – If the computer does not come with the recovery disc set, contact the Lenovo Customer Support Center to order a recovery disc set. See “Calling for service” on page 58.

Recovery information for Windows 10

To recover your Windows 10 operating system, use the following solutions:

- Use Windows recovery solutions.

- Use recovery solutions in Windows Settings.
  1. Click the Start button to open the Start menu.
  2. Click **Settings → Update & security → Recovery**.
  3. Choose the appropriate recovery solution by following the instructions on the screen.
- Use System Restore to restore system files and settings to an earlier point.
  1. Click the Start button to open the Start menu, and then click **Windows System → Control Panel**.
  2. View Control Panel using large icons or small icons, and then click **Recovery → Open System Restore**.
  3. Follow the instructions on the screen.
- Use the File History tool to restore your files from a backup.

  Note: If you use the File History tool to restore your files from a backup, ensure that you backed up your data earlier with the tool.
  1. Click the Start button to open the Start menu, and then click **Windows System → Control Panel**.
  2. View Control Panel using large icons or small icons, and then click **File History → Restore personal files**.
  3. Follow the instructions on the screen.
- Use the Windows recovery environment by doing one of the following:
  - After several consecutive failed boot attempts, the Windows recovery environment might start automatically. Follow the instructions on the screen to choose the appropriate recovery solution.
  - Select the recovery medium you created earlier with the Windows tool as the startup device. See “Selecting a temporary startup device” on page 32. Then, follow the instructions on the screen to choose the appropriate recovery solution.

    Note: To create a recovery medium, see “Good maintenance practices” on page 21.

- Use the recovery USB key provided by Lenovo to restore the entire storage drive to the factory-default settings.
  - If the computer comes with the recovery USB key, follow the instructions shipped with the USB key.
  - If the computer does not come with the recovery USB key, contact the Lenovo Customer Support Center to order a recovery USB key. See “Calling for service” on page 58.

Chapter 7. Installing or replacing hardware

This chapter contains the following topics:

- “Handling static-sensitive devices” on page 47
- “Installing or replacing hardware” on page 47

Handling static-sensitive devices

Do not open the static-protective package containing the new part until the defective part has been removed and you are ready to install the new part. Static electricity, although harmless to you, can seriously damage computer components and parts.

When you handle parts and other computer components, take these precautions to avoid static-electricity damage:

- Limit your movement. Movement can cause static electricity to build up around you.
- Always handle parts and other computer components carefully. Handle PCI/PCI-Express cards, memory modules, system boards, and microprocessors by the edges. Never touch any exposed circuitry.
- Prevent others from touching the parts and other computer components.
- Touch the static-protective package containing the part to a metal expansion-slot cover or other unpainted metal surface on the computer for at least two seconds. This reduces static electricity from the package and your body before you install or replace a new part.
- When possible, remove the new part from the static-protective package, and install it directly in the computer without setting the part down. When this is not possible, place the static-protective package that the part came in on a smooth, level surface and place the part on the package.
- Do not place the part on the computer cover or other metal surface.

Installing or replacing hardware

This section provides instructions on how to install or replace hardware for the computer. You can expand the capabilities of the computer and maintain the computer by installing or replacing hardware.

Attention: Do not open the computer or attempt any repair before reading and understanding the “Read this first: Important safety information” on page iii.

Notes:

- Some of the hardware parts in this section are optional.
- Use computer parts provided only by Lenovo.
- When installing or replacing an option, use the appropriate instructions in this section along with the instructions that come with the option.
- In most areas of the world, Lenovo requires the return of the defective CRU. Information about this will come with the CRU or will come a few days after the CRU arrives.

Installing external options

You can connect external options to the computer, such as external speakers, a printer, or a scanner. For some external options, you must install additional software in addition to making the physical connection. When installing an external option, see “Hardware locations” on page 1 to identify the required connector.

© Copyright Lenovo 2016, 2017

Use the instructions shipped with the option to help you make the connection and install any software or device drivers that are required for the option.

Replacing the power adapter

Attention: Do not open your computer or attempt any repair before reading and understanding the “Read this first: Important safety information” on page iii.

To replace the power adapter, do the following:

1. Remove all media from the drives and turn off all attached devices and the computer. Then, disconnect all power cords from electrical outlets and disconnect all cables that are connected to the computer.
2. Disconnect the power adapter cable from the computer.

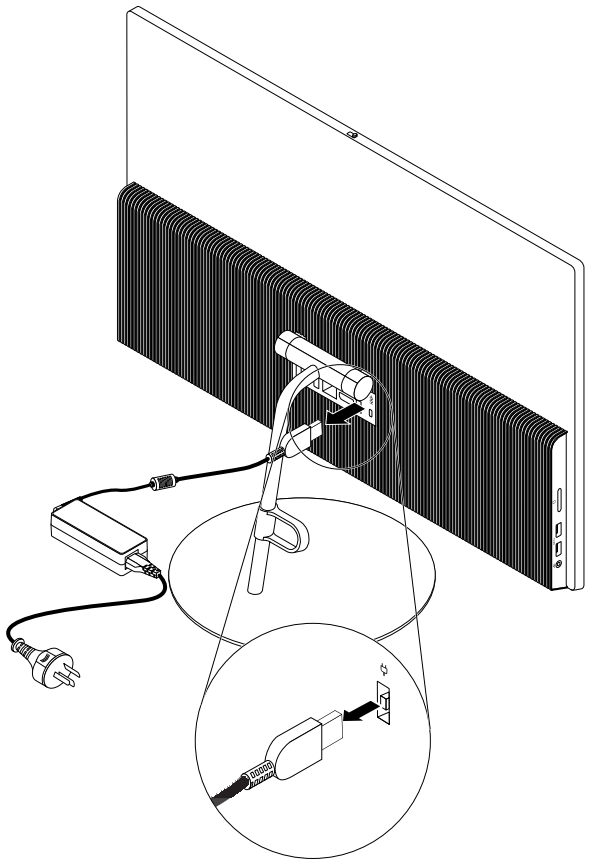

Figure 8. Disconnecting the power adapter

3. Connect the new power adapter to the power adapter connector at the rear of your computer and a workable electrical outlet.

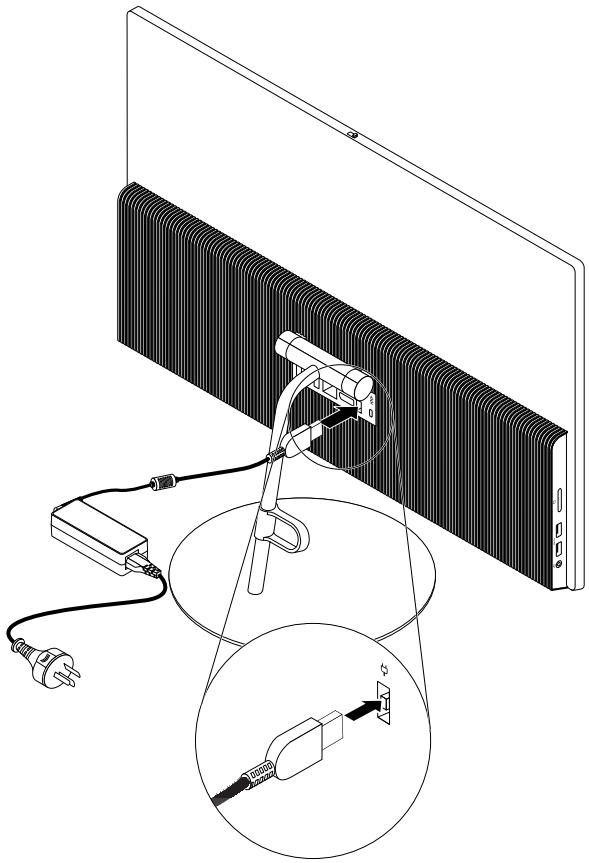

Figure 9. Connecting the new power adapter

Removing the slide cover

Attention: Do not open your computer or attempt any repair before reading and understanding the “Read this first: Important safety information” on page iii.

CAUTION:



Before you open the slide cover, turn off the computer and wait several minutes until the computer is cool.

To remove the slide cover, do the following:

1. Remove any media from the drives and turn off all connected devices and the computer. Then, disconnect all power cords from electrical outlets and disconnect all cables that are connected to the computer.
2. Unlock any locking device that secures the slide cover.
3. Hold the sides of your computer and gently lay it down so that the slide cover is facing up.

4. Hold the slide cover with your hands. Then, slide the cover as shown to remove it from the computer.

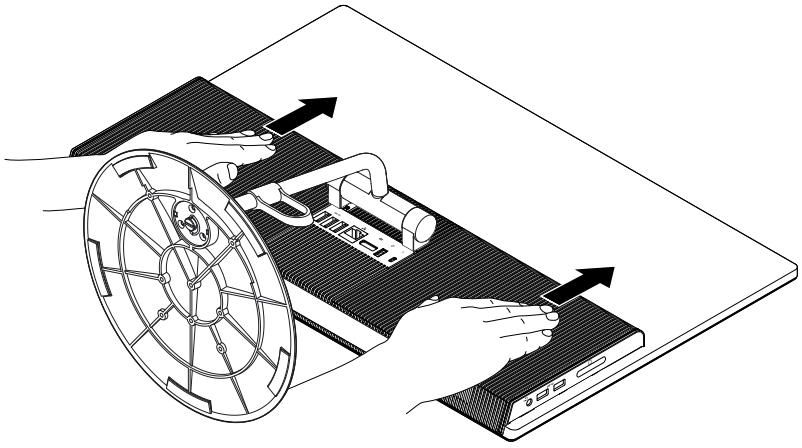

Figure 10. Removing the slide cover

Replacing the bottom cover

Attention: Do not open your computer or attempt any repair before reading and understanding the “Read this first: Important safety information” on page iii.

To replace the bottom cover, do the following:

1. Remove any media from the drives and turn off all connected devices and the computer. Then, disconnect all power cords from electrical outlets and disconnect all cables that are connected to the computer.
2. Remove the slide cover. See “Removing the slide cover” on page 49.
3. Locate the bottom cover. See “Computer components” on page 5.

4. Remove the eight screws 1 that secure the bottom cover to remove it from the computer.

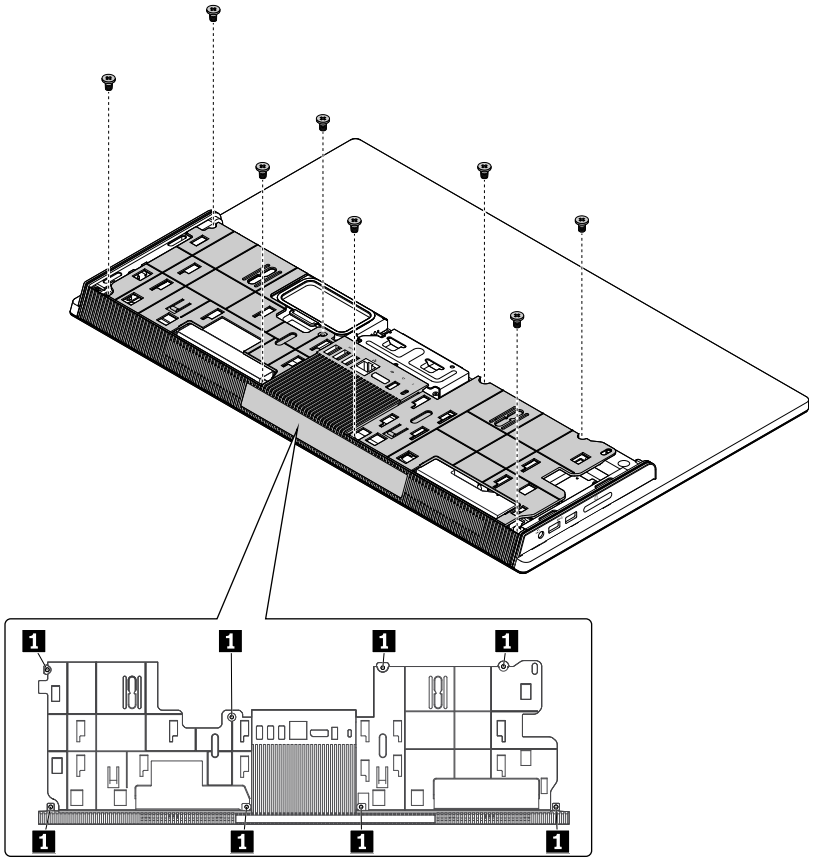

Figure 11. Removing the bottom cover

5. Align the screw holes in the new bottom cover with the corresponding holes in the computer. Then, install the eight screws to secure the bottom cover to the computer.

What to do next:

- To work with another piece of hardware, go to the appropriate section.
- To complete the installation or replacement, go to “Completing the parts replacement” on page 54.

Replacing the memory module

Attention: Do not open your computer or attempt any repair before reading and understanding the “Read this first: Important safety information” on page iii.

To replace the memory module, do the following:

1. Remove any media from the drives and turn off all connected devices and the computer. Then, disconnect all power cords from electrical outlets and disconnect all cables that are connected to the computer.
2. Remove the slide cover. See “Removing the slide cover” on page 49.
3. Locate the memory module. The memory module is installed underneath the memory module shield. See “Computer components” on page 5.
4. Pivot the memory module shield as shown to access the memory module.

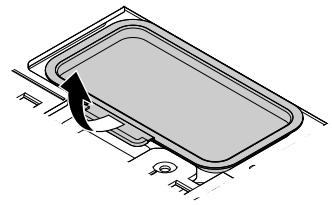

Figure 12. Removing the memory module shield

5. Open the retaining clips and gently pull the memory module out of the memory slot.

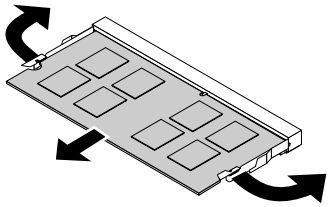

Figure 13. Removing the memory module

6. Position the new memory module over the memory slot. Ensure that the notch **1** on the memory module aligns correctly with the slot key **2** on the system board. Push the memory module straight down into the slot until the retaining clips close.

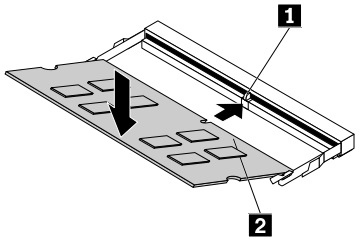

Figure 14. Installing the memory module

7. Press the memory module shield downward as shown to secure the memory module.

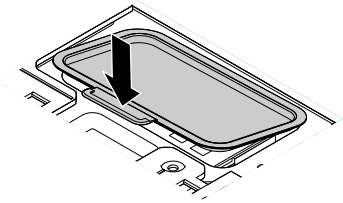

Figure 15. Installing the memory module shield

What to do next:

- To work with another piece of hardware, go to the appropriate section.
- To complete the installation or replacement, go to “Completing the parts replacement” on page 54.

Replacing the Orchid Tilt Stand

Attention: Do not open your computer or attempt any repair before reading and understanding the “Read this first: Important safety information” on page iii.

To replace the Orchid Tilt Stand, do the following:

1. Remove any media from the drives and turn off all connected devices and the computer. Then, disconnect all power cords from electrical outlets and disconnect all cables that are connected to the computer.
2. Place a soft, clean towel or cloth on the desk or surface. Hold the sides of your computer and gently lay it down so that the screen is against the surface and the slide cover is facing up.
3. Remove the slide cover. See “Removing the slide cover” on page 49.
4. Remove the bottom cover. See “Replacing the bottom cover” on page 50.
5. Remove the two screws that secure the Orchid Tilt Stand to remove it from the computer.

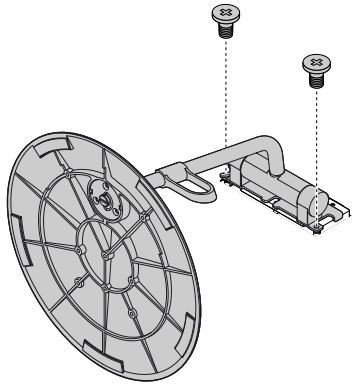

Figure 16. Removing the Orchid Tilt Stand

6. Rotate the screw **1** that secures the Orchid Tilt Stand base to remove it from the Orchid Tilt Stand.

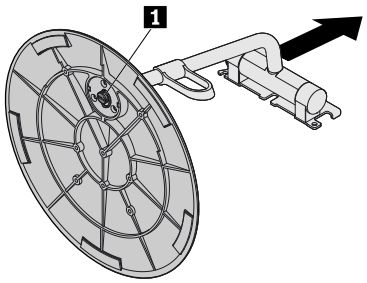

Figure 17. Removing the Orchid Tilt Stand base

7. Insert the metal stud on the Orchid Tilt Stand into the Orchid Tilt Stand base. Then, rotate the screw 1 to secure the new Orchid Tilt Stand base.

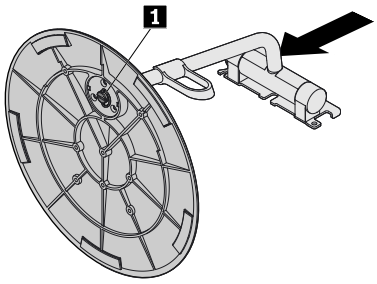

Figure 18. Installing the Orchid Tilt Stand base

8. Insert the two tabs 1 on the new Orchid Tilt Stand into the corresponding holes in the computer as shown. Then, pivot the Orchid Tilt Stand downward and install the two screws to secure the stand to the computer.

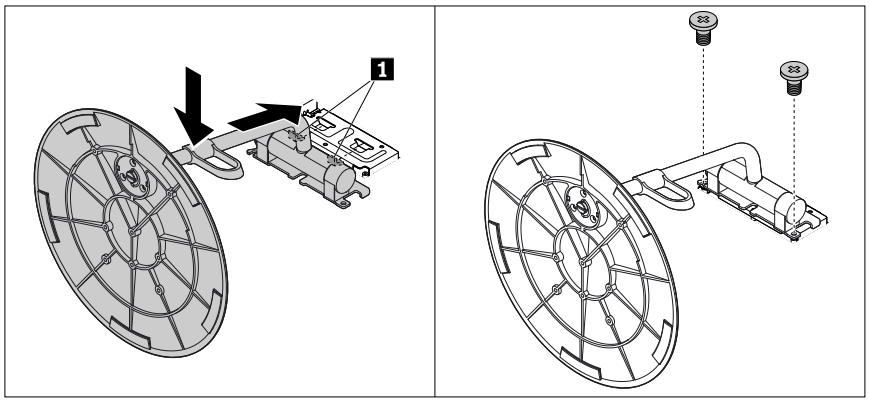

Figure 19. Installing the Orchid Tilt Stand

9. Install the bottom cover. See “Replacing the bottom cover” on page 50.

What to do next:

- To work with another piece of hardware, go to the appropriate section.
- To complete the installation or replacement, go to “Completing the parts replacement” on page 54.

Completing the parts replacement

After completing the installation or replacement for all parts, reinstall the slide cover and reconnect cables. Depending on the parts you installed or replaced, you might need to confirm the updated information in the Setup Utility program. Refer to “Using the Setup Utility program” on page 29.

To reinstall the slide cover and reconnect cables to your computer, do the following:

1. Ensure that all components have been reassembled correctly and that no tools or loose screws are left inside your computer. See “Computer components” on page 5 for the locations of various components in your computer.

2. Ensure that the cables are routed correctly before reinstalling the slide cover. Keep cables clear of the hinges and sides of the computer chassis to avoid interference with reinstalling the slide cover.
3. Align the sides of the slide cover with the corresponding rail guides on the computer. Then, slide the cover as shown until it snaps into position.

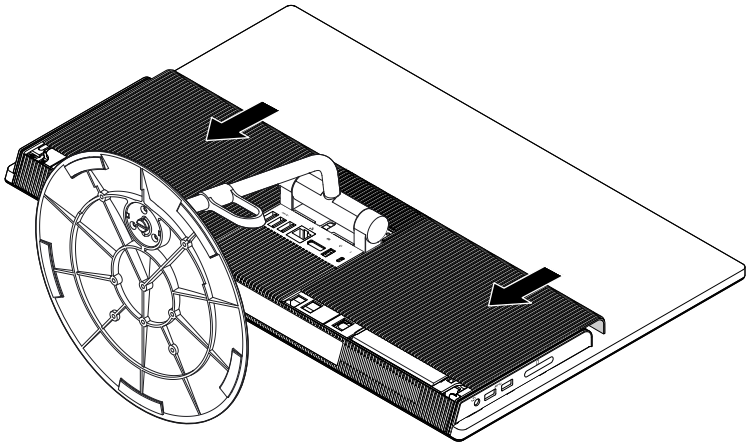

Figure 20. Installing the slide cover

4. Place the computer in an upright position.
5. If a locking device is available, use it to lock the computer. See “Locking the computer” on page 25.
6. Reconnect the external cables and power cords to the corresponding connectors on the computer. See “Hardware locations” on page 1.
7. Update your configuration. See “Using the Setup Utility program” on page 29.
8. If a newly installed hardware component does not work normally, update the device driver. See “Keeping the computer current” on page 22.

Chapter 8. Getting information, help, and service

This chapter contains the following topics:

- “Information resources” on page 57
- “Help and service” on page 58

Information resources

You can use the information in this section to access useful resources relating to your computing needs.

Accessing the user guide in various languages

To access the user guide in various languages, go to:
http://www.lenovo.com/UserManuals

Windows help system

Note: If you use the online help for Windows 7 or the help for Windows 10, ensure that the computer is connected to the Internet.

The Windows help system provides you with detailed information about using the Windows operating system.

To access the Windows help system, do the following:

1. Click the Start button to open the Start menu.
2. Depending on your Windows version, do one of the following:
   - For Windows 7: Click **Help and Support**. You can choose to use the online or offline help at the bottom of the screen.
   - For Windows 10: Click **Get Help**.

Safety and warranty

- The *Safety and Warranty Guide* provided with the computer contains important safety information, product warranty terms, and legal notices.
- The preface in this document contains additional safety information that applies to topics and tasks described in this document.

Ensure that you read and understand all safety information before using the computer.

Lenovo Web site

The Lenovo Web site (http://www.lenovo.com) provides up-to-date information and services to help you buy, upgrade, and maintain the computer. You also can do the following:

- Shop for desktop and notebook computers, monitors, projectors, upgrades and accessories for the computer, and special offers.
- Purchase additional services, such as support for hardware, operating systems, application programs, network setup and configuration, and custom installations.
- Purchase upgrades and extended hardware repair services.
- Access troubleshooting and support information for the computer model and other supported products.

© Copyright Lenovo 2016, 2017

- Find a Service Provider located near you.

Lenovo Support Web site

Technical support information is available on the Lenovo Support Web site at:
http://www.lenovo.com/support

This Web site is updated with the latest support information such as the following:

- Diagnostic solutions
- Drivers and software
- Knowledge base and frequently asked questions
- Latest electronic manuals
- Lenovo Support phone numbers
- Product and parts details
- Product and service warranty

Frequently asked questions

For the answers to frequently asked questions about the computer, go to:
http://www.lenovo.com/support/faq

Help and service

This section provides information about obtaining help and service.

Calling for service

During the warranty period, you can get help and information by telephone through the Customer Support Center. For the warranty period of the computer, go to http://www.lenovo.com/warranty-status. For a list of Lenovo Support phone numbers, go to http://www.lenovo.com/support/phone.

Note: Phone numbers are subject to change without notice. If the number for your country or region is not provided, contact your Lenovo reseller or Lenovo marketing representative.

The following services are available during the warranty period:

- **Problem determination** - Trained service personnel are available to assist you with determining a hardware problem and deciding what action is necessary to fix the problem.
- **Hardware repair** - If the problem is caused by hardware under warranty, trained service personnel are available to provide the applicable level of service.
- **Engineering Change management** - There might be changes that are required after a product has been sold. Lenovo or your reseller will make selected Engineering Changes (ECs) that apply to your hardware available.

These items are not covered by the warranty:
- Replacement or use of parts not manufactured for or by Lenovo or non-warranted Lenovo parts
- Identification of software problem sources
- Configuration of BIOS as part of an installation or upgrade
- Changes, modifications, or upgrades to device drivers
- Installation and maintenance of network operating systems (NOS)
- Installation and maintenance of application programs

If possible, be at the computer when you call. Have the following information available:

- Machine type and model
- Serial numbers of your hardware products
- Description of the problem
- Exact wording of any error messages
- Hardware and software configuration information

Using other services

You might travel with the computer or relocate it to a country or region where the machine type for your desktop or notebook computer is sold. In such a situation, the computer might be eligible for International Warranty Service, which automatically entitles you to obtain warranty service throughout the warranty period. Service will be performed by service providers authorized to perform warranty service.

Service methods and procedures vary by country, and some services might not be available in all countries. International Warranty Service is delivered through the method of service (such as depot, carry-in, or on-site service) that is provided in the servicing country. Service centers in certain countries might not be able to service all models of a particular machine type. In some countries, fees and restrictions might apply at the time of service.

To determine whether the computer is eligible for International Warranty Service and to view a list of the countries or regions where service is available, go to http://www.lenovo.com/support.

For technical assistance with the installation of or questions related to Service Packs for your preinstalled Microsoft Windows product, go to the Microsoft Product Support Web site at http://support.microsoft.com. You also can contact the Lenovo Customer Support Center for help. Some fees might apply.

Purchasing additional services

During and after the warranty period, you can purchase additional services. Examples of these additional services include:

- Support for hardware, operating systems, and application programs
- Network setup and configuration services
- Upgraded or extended hardware repair services
- Custom installation services

Service availability and service name might vary by country or region. For more information about these services, go to the Lenovo Web site at:
http://www.lenovo.com

Appendix A. Regulatory information

The latest compliance information is available at http://www.lenovo.com/compliance.

Export classification notice

This product is subject to the United States Export Administration Regulations (EAR) and has an Export Classification Control Number (ECCN) of 5A992.c. It can be re-exported except to any of the embargoed countries in the EAR E1 country list.

Electronic emissions notices

The following information refers to Lenovo personal computer machine types 10HT, 10HU, 10JX, 10JY, 10JW, 10K0, 10KE, and 10KF.

Federal Communications Commission Declaration of Conformity

This equipment has been tested and found to comply with the limits for a Class B digital device, pursuant to Part 15 of the FCC Rules. These limits are designed to provide reasonable protection against harmful interference in a residential installation. This equipment generates, uses, and can radiate radio frequency energy and, if not installed and used in accordance with the instructions, may cause harmful interference to radio communications. However, there is no guarantee that interference will not occur in a particular installation. If this equipment does cause harmful interference to radio or television reception, which can be determined by turning the equipment off and on, the user is encouraged to try to correct the interference by one or more of the following measures:

- Reorient or relocate the receiving antenna.
- Increase the separation between the equipment and receiver.
- Connect the equipment into an outlet on a circuit different from that to which the receiver is connected.
- Consult an authorized dealer or service representative for help.

Lenovo is not responsible for any radio or television interference caused by using other than specified or recommended cables and connectors or by unauthorized changes or modifications to this equipment. Unauthorized changes or modifications could void the user's authority to operate the equipment.

This device complies with Part 15 of the FCC Rules. Operation is subject to the following two conditions: (1) this device may not cause harmful interference, and (2) this device must accept any interference received, including interference that may cause undesired operation.

Responsible Party:
Lenovo (United States) Incorporated
1009 Think Place - Building One
Morrisville, NC 27560
Phone Number: 919-294-5900

Industry Canada Class B emission compliance statement

CAN ICES-3(B)/NMB-3(B)

European Union conformity

© Copyright Lenovo 2016, 2017

EU Contact: Lenovo, Einsteinova 21, 851 01 Bratislava, Slovakia

CE

Models without a radio device: This product is in conformity with the protection requirements of EU Council EMC Directive 2014/30/EU on the approximation of the laws of the Member States relating to electromagnetic compatibility.

Models with a radio device: This product is in conformity with all the requirements and essential norms that apply to EU Council R&TTE Directive 1999/5/EC (until June 12, 2017) and Council Radio Equipment Directive 2014/53/EU (from June 13, 2017) on the approximation of the laws of the Member States relating to radio equipment. The full text of the system EU declaration of conformity and the EU wireless module declarations are available at the following Internet address:
http://www.lenovo.com/social_responsibility/us/en/eu_doc_desktops/

Lenovo cannot accept responsibility for any failure to satisfy the protection requirements resulting from a non-recommended modification of the product, including the installation of option cards from other manufacturers. This product has been tested and found to comply with the limits for Class B equipment according to European Standards harmonized in the Directives in compliance. The limits for Class B equipment were derived for typical residential environments to provide reasonable protection against interference with licensed communication devices.

German Class B compliance statement

Deutschsprachiger EU Hinweis:

Hinweis für Geräte der Klasse B EU Richtlinie zur Elektromagnetischen Verträglichkeit
Dieses Produkt entspricht den Schutzanforderungen der EU Richtlinie 2014/30/EU zur Angleichung der Rechtsvorschriften über die elektromagnetische Verträglichkeit in den EU-Mitgliedsstaaten und hält die Grenzwerte der Klasse B der Norm gemäß Richtlinie.

Um dieses sicherzustellen, sind die Geräte wie in den Handbüchern beschrieben zu installieren und zu betreiben. Des Weiteren dürfen auch nur von der Lenovo empfohlene Kabel angeschlossen werden. Lenovo übernimmt keine Verantwortung für die Einhaltung der Schutzanforderungen, wenn das Produkt ohne Zustimmung der Lenovo verändert bzw. wenn Erweiterungskomponenten von Fremdherstellern ohne Empfehlung der Lenovo gesteckt/eingebaut werden.

Deutschland:

Einhaltung des Gesetzes über die elektromagnetische Verträglichkeit von Betriebsmitteln
Dieses Produkt entspricht dem „Gesetz über die elektromagnetische Verträglichkeit von Betriebsmitteln“ EMVG (früher „Gesetz über die elektromagnetische Verträglichkeit von Geräten“). Dies ist die Umsetzung der EMV EU Richtlinie 2014/30/EU in der Bundesrepublik Deutschland.

Zulassungsbescheinigung laut dem Deutschen Gesetz über die elektromagnetische Verträglichkeit von Betriebsmitteln, EMVG vom 20. Juli 2007 (früher Gesetz über die elektromagnetische Verträglichkeit von Geräten), bzw. der EMV EU Richtlinie 2014/30/EU, für Geräte der Klasse B.

Dieses Gerät ist berechtigt, in Übereinstimmung mit dem Deutschen EMVG das EG-Konformitätszeichen - CE - zu führen. Verantwortlich für die Konformitätserklärung nach Paragraf 5 des EMVG ist die Lenovo (Deutschland) GmbH, Meitnerstr. 9, D-70563 Stuttgart.

Informationen in Hinsicht EMVG Paragraf 4 Abs. (1) 4:
Das Gerät erfüllt die Schutzanforderungen nach EN 55024 und EN 55032 Klasse B.

Japan VCCI Class B compliance statement

この装置は，クラスB情報技術装置です。 この装置は，家庭環境で使用することを目的としていますが，この装置がラジオやテレビジョン受信機に近接して使用されると，受信障害を引き起こすことがあります。
取扱説明書に従って正しい取り扱いをして下さい。 VCCI-B

Japan compliance statement for products which connect to the power mains with rated current less than or equal to 20 A per phase

日本の定格電流が 20A/相 以下の機器に対する高調波電流規制
高調波電流規格 JIS C 61000-3-2 適合品

Japan notice for ac power cord

The ac power cord shipped with your product can be used only for this specific product. Do not use the ac power cord for other devices.

本製品およびオプションに電源コード・セットが付属する場合は、
それぞれ専用のものになっていますので他の電気機器には使用し
ないでください。

Lenovo product service information for Taiwan

台灣 Lenovo 產品服務資訊如下:
荷蘭商聯想股份有限公司台灣分公司
台北市內湖區堤頂大道二段89號5樓
服務電話：0800-000-702

Keyboard and mouse compliance statement for Taiwan

本產品隨貨附已取得經濟部標準檢驗局認可之PS/2或USB的鍵盤與滑鼠一組

Eurasian compliance mark

EAC

Brazil audio notice

Ouvir sons com mais de 85 decibéis por longos períodos pode provocar danos ao sistema auditivo.

Mexico wireless-radio compliance information

Advertencia: En Mexico la operación de este equipo estásujeta a las siguientes dos condiciones: (1) es posible que este equipo o dispositivo no cause interferencia perjudicial y (2) este equipo o dispositivo debe aceptar cualquier interferencia, incluyendo la que pueda causar su operación no deseada.

Taiwan vision precaution notice

使用過度恐傷害視力
注意事項: （1）使用30分鐘請休息10分鐘。（2）未滿2歲幼兒不看螢幕，2歲以上每天看螢幕不要超過1小時。

Additional regulatory information

For additional regulatory information, refer to the *Regulatory Notice* shipped with the computer. Depending on the configuration of the computer and the country or region where the computer was purchased, you

might have received additional printed regulatory notices. All regulatory notices are available on the Lenovo Support Web site in electronic format. To access electronic copies of the documentation, go to http://www.lenovo.com/UserManuals.

Appendix B. WEEE and recycling information

Lenovo encourages owners of information technology (IT) equipment to responsibly recycle their equipment when it is no longer needed. Lenovo offers a variety of programs and services to assist equipment owners in recycling their IT products. For information on recycling Lenovo products, go to http://www.lenovo.com/recycling. The latest environmental information about our products is available at http://www.lenovo.com/ecodeclaration.

Important WEEE information

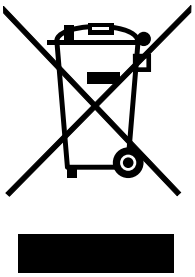

The WEEE marking on Lenovo products applies to countries with WEEE and e-waste regulations (for example, the European WEEE Directive, India E-Waste Management & Handling Rules). Appliances are labeled in accordance with local regulations concerning waste electrical and electronic equipment (WEEE). These regulations determine the framework for the return and recycling of used appliances as applicable within each geography. This label is applied to various products to indicate that the product is not to be thrown away, but rather put in the established collection systems for reclaiming these end of life products.

Users of electrical and electronic equipment (EEE) with the WEEE marking must not dispose of end of life EEE as unsorted municipal waste, but use the collection framework available to them for the return, recycle, and recovery of WEEE and to minimize any potential effects of EEE on the environment and human health due to the presence of hazardous substances. Lenovo electrical and electronic equipment (EEE) may contain parts and components, which at end-of-life might qualify as hazardous waste.

EEE and waste electrical and electronic equipment (WEEE) can be delivered free of charge to the place of sale or any distributor that sells electrical and electronic equipment of the same nature and function as the used EEE or WEEE.

For additional WEEE information, go to:
http://www.lenovo.com/recycling

WEEE information for Hungary

Lenovo, as a producer, bears the cost incurred in connection with the fulfillment of Lenovo's obligations under Hungary Law No. 197/2014 (VIII.1.) subsections (1)-(5) of section 12.

Recycling information for Japan

Collecting and recycling a disused Lenovo computer or monitor

If you are a company employee and need to dispose of a Lenovo computer or monitor that is the property of the company, you must do so in accordance with the Law for Promotion of Effective Utilization of Resources. Computers and monitors are categorized as industrial waste and should be properly disposed of by an industrial waste disposal contractor certified by a local government. In accordance with the Law

© Copyright Lenovo 2016, 2017

for Promotion of Effective Utilization of Resources, Lenovo Japan provides, through its PC Collecting and Recycling Services, for the collecting, reuse, and recycling of disused computers and monitors. For details, visit the Lenovo Web site at http://www.lenovo.com/recycling/japan. Pursuant to the Law for Promotion of Effective Utilization of Resources, the collecting and recycling of home-used computers and monitors by the manufacturer was begun on October 1, 2003. This service is provided free of charge for home-used computers sold after October 1, 2003. For details, visit the Lenovo Web site at http://www.lenovo.com/recycling/japan.

Disposing of Lenovo computer components

Some Lenovo computer products sold in Japan may have components that contain heavy metals or other environmental sensitive substances. To properly dispose of disused components, such as a printed circuit board or drive, use the methods described above for collecting and recycling a disused computer or monitor.

Disposing of disused lithium batteries from Lenovo computers

A button-shaped lithium battery is installed inside your Lenovo computer to provide power to the computer clock while the computer is off or disconnected from the main power source. If you need to replace it with a new one, contact your place of purchase or contact Lenovo for service. If you need to dispose of a disused lithium battery, insulate it with vinyl tape, contact your place of purchase or an industrial-waste-disposal operator, and follow their instructions. Disposal of a lithium battery must comply with local ordinances and regulations.

Recycling information for Brazil

Declarações de Reciclagem no Brasil

Descarte de um Produto Lenovo Fora de Uso

Equipamentos elétricos e eletrônicos não devem ser descartados em lixo comum, mas enviados à pontos de coleta, autorizados pelo fabricante do produto para que sejam encaminhados e processados por empresas especializadas no manuseio de resíduos industriais, devidamente certificadas pelos orgãos ambientais, de acordo com a legislação local.

A Lenovo possui um canal específico para auxiliá-lo no descarte desses produtos. Caso você possua um produto Lenovo em situação de descarte, ligue para o nosso SAC ou encaminhe um e-mail para: reciclar@lenovo.com, informando o modelo, número de série e cidade, a fim de enviarmos as instruções para o correto descarte do seu produto Lenovo.

Battery recycling information for Taiwan



廢電池請回收

Battery recycling information for the European Union

EU

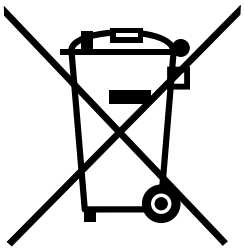

Notice: This mark applies only to countries within the European Union (EU).

Batteries or packaging for batteries are labeled in accordance with European Directive 2006/66/EC concerning batteries and accumulators and waste batteries and accumulators. The Directive determines the framework for the return and recycling of used batteries and accumulators as applicable throughout the European Union. This label is applied to various batteries to indicate that the battery is not to be thrown away, but rather reclaimed upon end of life per this Directive.

In accordance with the European Directive 2006/66/EC, batteries and accumulators are labeled to indicate that they are to be collected separately and recycled at end of life. The label on the battery may also include a chemical symbol for the metal concerned in the battery (Pb for lead, Hg for mercury, and Cd for cadmium). Users of batteries and accumulators must not dispose of batteries and accumulators as unsorted municipal waste, but use the collection framework available to customers for the return, recycling, and treatment of batteries and accumulators. Customer participation is important to minimize any potential effects of batteries and accumulators on the environment and human health due to the potential presence of hazardous substances.

Before placing electrical and electronic equipment (EEE) in the waste collection stream or in waste collection facilities, the end user of equipment containing batteries and/or accumulators must remove those batteries and accumulators for separate collection.

Disposing of lithium batteries and battery packs from Lenovo products

A coin-cell type lithium battery might be installed inside your Lenovo product. You can find details about the battery in the product documentation. If the battery needs to be replaced, contact your place of purchase or contact Lenovo for service. If you need to dispose of a lithium battery, insulate it with vinyl tape, contact your place of purchase or a waste-disposal operator, and follow their instructions.

Disposing of battery packs from Lenovo products

Your Lenovo device might contain a lithium-ion battery pack or a nickel metal hydride battery pack. You can find details on the battery pack in the product documentation. If you need to dispose of a battery pack, insulate it with vinyl tape, contact Lenovo sales, service, or your place of purchase, or a waste-disposal operator, and follow their instructions. You also can refer to the instructions provided in the manuals for your product.

For proper collection and treatment, go to:
http://www.lenovo.com/lenovo/environment

Appendix C. Restriction of Hazardous Substances (RoHS) Directive

The latest environmental information is available at http://www.lenovo.com/ecodeclaration.

European Union RoHS

This Lenovo product, with included parts (cables, cords, and so on) meets the requirements of Directive 2011/65/EU on the restriction of the use of certain hazardous substances in electrical and electronic equipment (“RoHS recast” or “RoHS 2”).

For more information about Lenovo worldwide compliance on RoHS, go to:
http://www.lenovo.com/social_responsibility/us/en/RoHS_Communication.pdf

Turkish RoHS

The Lenovo product meets the requirements of the Republic of Turkey Directive on the Restriction of the Use of Certain Hazardous Substances in Waste Electrical and Electronic Equipment (WEEE).

Türkiye AEEE Yönetmeliğine Uygunluk Beyanı

Bu Lenovo ürünü, T.C. Çevre ve Orman Bakanlığı'nın “Atık Elektrik ve Elektronik Eşyalarda Bazı Zararlı Maddelerin Kullanımının Sınırlandırılmasına Dair Yönetmelik (AEEE)” direktiflerine uygundur.

AEEE Yönetmeliğine Uygundur.

Ukraine RoHS

Цим підтверджуємо, що продукція Леново відповідає вимогам нормативних актів України, які обмежують вміст небезпечних речовин

India RoHS

RoHS compliant as per E-waste (Management) Rules.

© Copyright Lenovo 2016, 2017

China RoHS

产品中有害物质的名称及含量

部件名称	有害物质					
	铅(Pb)	汞(Hg)	镉(Cd)	六价铬 (Cr(VI))	多溴连苯 (PBB)	多溴二苯醚 (PBDE)
印刷电路板组件*	X	O	O	O	O	O
硬盘	X	O	O	O	O	O
光驱	X	O	O	O	O	O
内存	X	O	O	O	O	O
电脑I/O 附件	X	O	O	O	O	O
电源	X	O	O	O	O	O
键盘	X	O	O	O	O	O
鼠标	X	O	O	O	O	O
机箱/ 附件	X	O	O	O	O	O
电池	X	O	O	O	O	O

本表格依据 SJ/T 11364 的规定编制。
○：表示该有害物质在该部件所有均质材料中的含量均在 GB/T 26572 规定的限量要求以下。
×：表示该有害物质至少在该部件的某一均质材料中的含量超出 GB/T 26572 规定的限量要求。
注：表中标记“×”的部件，皆因全球技术发展水平限制而无法实现有害物质的替代。
印刷电路板组件*：包括印刷电路板及其零部件、电容和连接器。
根据型号的不同，可能不会含有以上的所有部件，请以实际购买机型为准。



在中华人民共和国境内销售的电子信息产品必须标识此标志，标志内的数字代表在正常使用状态下的产品的环保使用期限。

Taiwan RoHS

單元	限用物質及其化學符號					
	鉛 (Pb)	汞 (Hg)	鎘 (Cd)	六價鉻 (Cr^{+6})	多溴聯苯 (PBB)	多溴二苯醚 (PBDE)
印刷電路板組件	–	○	○	○	○	○
硬碟	–	○	○	○	○	○
光碟機	–	○	○	○	○	○
記憶體	–	○	○	○	○	○
電腦I/O配件	–	○	○	○	○	○
電源供應器	–	○	○	○	○	○
鍵盤	–	○	○	○	○	○
滑鼠	–	○	○	○	○	○
機殼/配件	–	○	○	○	○	○

備考1.〝超出0.1 wt %〞及〝超出0.01 wt %〞係指限用物質之百分比含量超出百分比含量基準值。

備考2.〝○〞係指該項限用物質之百分比含量未超出百分比含量基準值。

備考3.〝–〞係指該項限用物質為排除項目。

Appendix D. ENERGY STAR model information



ENERGY STAR® is a joint program of the U.S. Environmental Protection Agency and the U.S. Department of Energy aimed at saving money and protecting the environment through energy efficient products and practices.

Lenovo is proud to offer our customers products with an ENERGY STAR compliant designation. Some models of the following machine types have been designed and tested to conform to the ENERGY STAR program requirement for computers at the time of manufacture: 10HT, 10HU, 10JX, 10JY, 10JW, 10K0, 10KE, and 10KF. For more information about ENERGY STAR ratings for Lenovo computers, go to http://www.lenovo.com.

By using ENERGY STAR compliant products and taking advantage of the power-management features of your computer, you reduce the consumption of electricity. Reduced electrical consumption contributes to potential financial savings, a cleaner environment, and the reduction of greenhouse gas emissions.

For more information about ENERGY STAR, go to:
http://www.energystar.gov

Lenovo encourages you to make efficient use of energy an integral part of your day-to-day operations. To help in this endeavor, set the following power-management features to take effect when your computer has been inactive for a specified duration:

Table 1. ENERGY STAR power-management features

Windows 7 or Windows 10 operating system
Power plan: Default • Turn off the display: After 10 minutes • Put the computer to sleep: After 25 minutes • Advanced power settings: – Turn off hard disk drives: After 20 minutes – Hibernate: Never

To awaken your computer from a Sleep mode, press any key on your keyboard.

To change power settings, do the following:

1. Open Control Panel by doing one of the following:
   - For Windows 7: Click the Start button to open the Start menu.
   - For Windows 10: Right-click the Start button to open the Start context menu.
2. Click **Control Panel**. View Control Panel using Large icons or Small icons, and then click **Power Options**.
3. Follow the instructions on the screen.

© Copyright Lenovo 2016, 2017

Appendix E. Notices

Lenovo may not offer the products, services, or features discussed in this document in all countries. Consult your local Lenovo representative for information on the products and services currently available in your area. Any reference to a Lenovo product, program, or service is not intended to state or imply that only that Lenovo product, program, or service may be used. Any functionally equivalent product, program, or service that does not infringe any Lenovo intellectual property right may be used instead. However, it is the user's responsibility to evaluate and verify the operation of any other product, program, or service.

Lenovo may have patents or pending patent applications covering subject matter described in this document. The furnishing of this document does not give you any license to these patents. You can send license inquiries, in writing, to:

Lenovo (United States), Inc.
1009 Think Place - Building One
Morrisville, NC 27560
U.S.A.
Attention: Lenovo Director of Licensing

LENOVO PROVIDES THIS PUBLICATION “AS IS” WITHOUT WARRANTY OF ANY KIND, EITHER EXPRESS OR IMPLIED, INCLUDING, BUT NOT LIMITED TO, THE IMPLIED WARRANTIES OF NON-INFRINGEMENT, MERCHANTABILITY OR FITNESS FOR A PARTICULAR PURPOSE. Some jurisdictions do not allow disclaimer of express or implied warranties in certain transactions, therefore, this statement may not apply to you.

This information could include technical inaccuracies or typographical errors. Changes are periodically made to the information herein; these changes will be incorporated in new editions of the publication. Lenovo may make improvements and/or changes in the product(s) and/or the program(s) described in this publication at any time without notice.

The products described in this document are not intended for use in implantation or other life support applications where malfunction may result in injury or death to persons. The information contained in this document does not affect or change Lenovo product specifications or warranties. Nothing in this document shall operate as an express or implied license or indemnity under the intellectual property rights of Lenovo or third parties. All information contained in this document was obtained in specific environments and is presented as an illustration. The result obtained in other operating environments may vary.

Lenovo may use or distribute any of the information you supply in any way it believes appropriate without incurring any obligation to you.

Any references in this publication to non-Lenovo Web sites are provided for convenience only and do not in any manner serve as an endorsement of those Web sites. The materials at those Web sites are not part of the materials for this Lenovo product, and use of those Web sites is at your own risk.

Any performance data contained herein was determined in a controlled environment. Therefore, the result obtained in other operating environments may vary significantly. Some measurements may have been made on development-level systems and there is no guarantee that these measurements will be the same on generally available systems. Furthermore, some measurements may have been estimated through extrapolation. Actual results may vary. Users of this document should verify the applicable data for their specific environment.

© Copyright Lenovo 2016, 2017

Trademarks

The following terms are trademarks of Lenovo in the United States, other countries, or both:

Lenovo
The Lenovo logo
ThinkCentre
The ThinkCentre logo
Rescue and Recovery
ThinkVantage

Microsoft, Windows, and Windows Media are trademarks of the Microsoft group of companies.

Intel is a trademark of Intel Corporation or its subsidiaries in the U.S. and/or other countries.

DisplayPort is a trademark of the Video Electronics Standards Association.

Other company, product, or service names may be trademarks or service marks of others.

