P15 Gen 1 and T15g Gen 1 User Guide

Read this first

Before using this documentation and the product it supports, ensure that you read and understand the following:

- *Safety and Warranty Guide*
- *Generic Safety and Compliance Notices*
- *Setup Guide*

First Edition (July 2020)

© Copyright Lenovo 2020.

LIMITED AND RESTRICTED RIGHTS NOTICE: If data or software is delivered pursuant to a General Services Administration “GSA” contract, use, reproduction, or disclosure is subject to restrictions set forth in Contract No. GS-35F-05925.

Contents

About this documentation iii

Chapter 1. Meet your computer 1

Front 1
Base 2
Left 3
Right 4
Rear 5
Bottom 6
USB connectors 7

Chapter 2. Get started with your computer 9

Get started with your desktop 9
Manage networks 9
Connect to Wi-Fi networks 9
Airplane mode 10
Interact with your computer 10
Use the camera 10
Use the keyboard shortcuts 10
Use the TrackPoint pointing device 11
Use the trackpad 12
Use the multi-touch screen 14
Connect to an external display 15
Use Lenovo Pen Pro (for selected models) 16

Chapter 3. Explore your computer . . 19

Use the Intelligent Cooling feature 19
Use the Cool and Quiet on lap feature 19
Connect to a Bluetooth-enabled device 19

Chapter 4. Secure your computer and information 21

Lock the computer 21
Use the fingerprint reader 21
Use passwords 22
Password types 22
Set, change, and remove a password 23
Use Power Loss Protection function (for selected models) 24

Chapter 5. Configure advanced settings 25

UEFI BIOS 25
What is UEFI BIOS 25
Enter the UEFI BIOS menu 25
Navigate in the UEFI BIOS interface 25
Change the startup sequence 25
Set the system date and time 26
Update UEFI BIOS 26

Chapter 6. CRU replacement 27

CRU list 27
Disable the built-in battery 27
Replace a CRU 28
Bottom door 28
M.2 solid-state drive 29
Keyboard 31

Chapter 7. Help and support 37

Frequently asked questions 37
Error messages 38
Beep errors 39
Self-help resources 40
Call Lenovo 42
Before you contact Lenovo 42
Lenovo Customer Support Center 42
Purchase additional services 43

Appendix A. Ergonomic information 45

Appendix B. Compliance information 47

Appendix C. Notices and trademarks 51

© Copyright Lenovo 2020

About this documentation

- Illustrations in this documentation might look different from your product.
- Depending on the model, some optional accessories, features, software programs, and user interface instructions might not be applicable to your computer.
- Documentation content is subject to change without notice. To get the latest documentation, go to https://pcsupport.lenovo.com.

© Copyright Lenovo 2020

Chapter 1. Meet your computer

Front

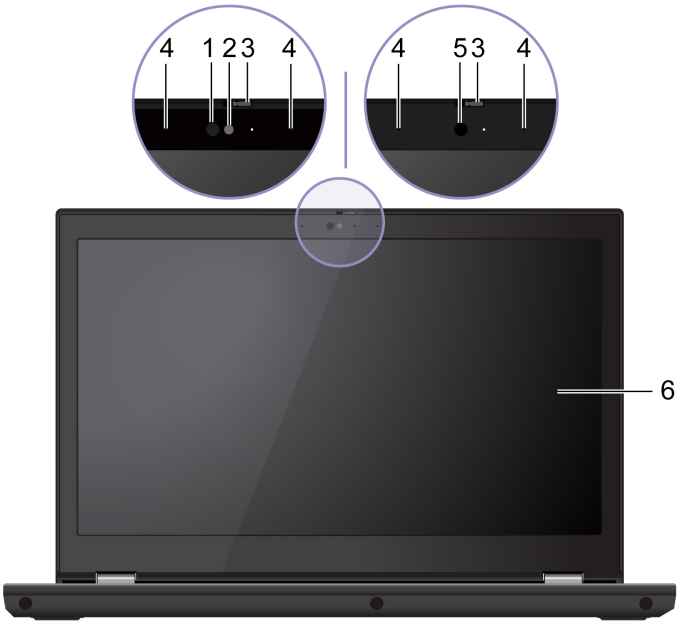

1. Infrared (IR) LED*	2. Camera with IR function*
3. ThinkShutter*	4. Microphones
5. Camera*	6. Multi-touch screen*

* for selected models

ThinkShutter: Slide ThinkShutter to cover or uncover the camera lens. It is designed to protect your privacy.

Related topic

“Use the multi-touch screen” on page 14

© Copyright Lenovo 2020

Base

1. Power button	2. Numeric keypad
3. Fingerprint reader	4. Trackpad
5. TrackPoint® pointing device	6. Speaker

Related topics

- “Use the fingerprint reader” on page 21
- “Use the trackpad” on page 12
- “Use the TrackPoint® pointing device” on page 11

Left

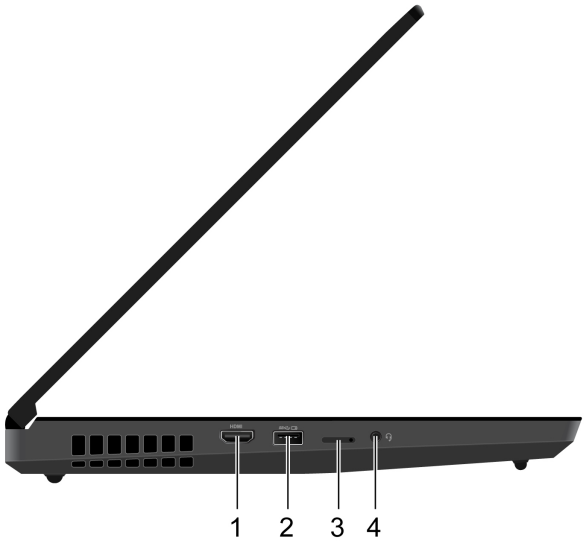

1. HDMI™ connector	2. Always On USB 3.2 connector Gen 1
3. Nano-SIM-card tray*	4. Audio connector

* for selected models

Related topics

- “USB connectors” on page 7

Right

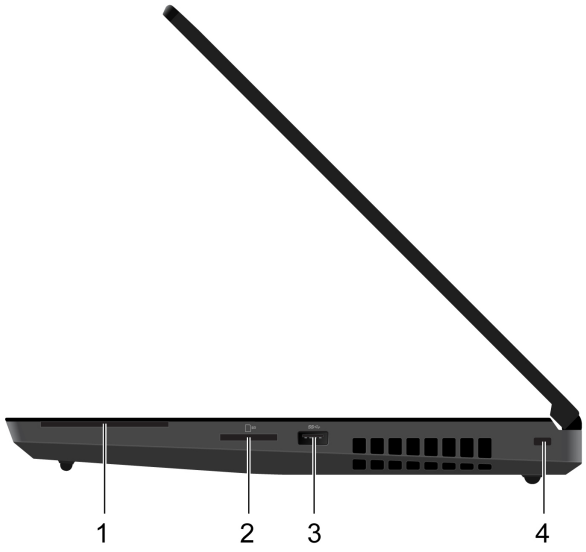

1. Smart-card slot*	2. SD-card slot
3. USB 3.2 connector Gen 1	4. Security-lock slot

Related topics

- “Use Lenovo Pen Pro (for selected models)” on page 16
- “USB connectors” on page 7
- “Lock the computer” on page 21

Rear

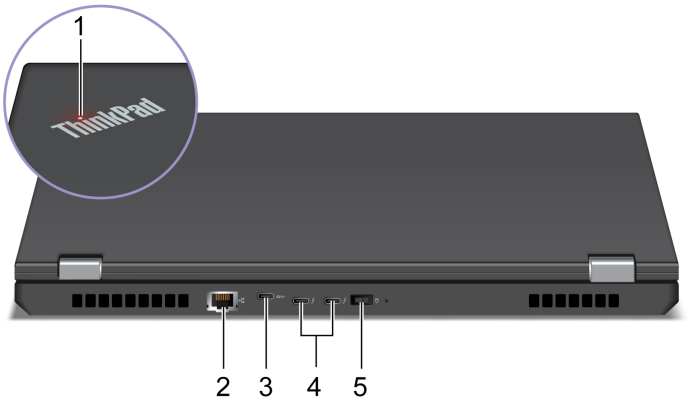

1. System status indicator	2. Ethernet connector
3. USB-C™ (3.2 Gen 1) connector	4. Thunderbolt™ 3 connectors (USB-C)
5. Power connector	

Bottom

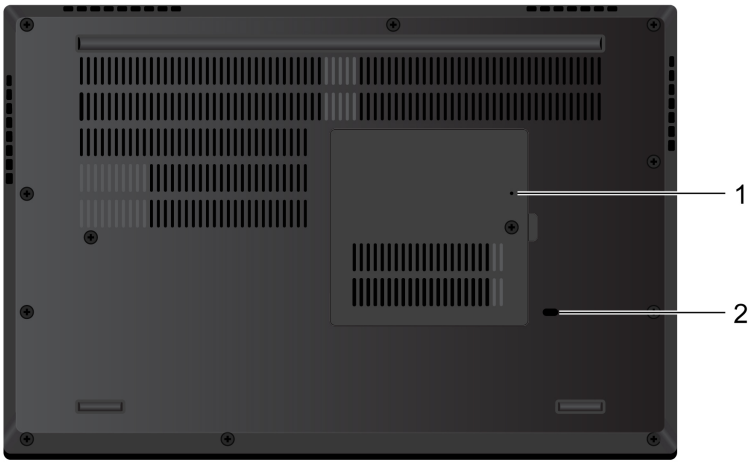

1. Emergency-reset hole	2. Keyboard drainage hole

Emergency-reset hole

If the computer stops responding and you cannot turn it off by pressing the power button, reset your computer:

1. Disconnect your computer from ac power.
2. Insert a straightened paper clip into the hole to cut off power supply temporarily.
3. Connect your computer to ac power and then turn on your computer.

USB connectors

Thunderbolt 3 connectors (USB-C)

- Charge USB-C compatible devices:
  - The output voltage and current: 5 V and 3 A (when only one device is charged).
  - The output voltage and current: 5 V and 3 A (for the first connected device when two devices are charged).
  - The output voltage and current: 5 V and 1.5 A (for the second connected device when two devices are charged).

  Transfer data at Thunderbolt 3 speed, up to 40 Gbps.
- Connect to an external display:
  - USB-C to VGA: 1900 x 1200 pixels, 60 Hz
  - USB-C to DP: 5120 x 3200 pixels, 60 Hz
- Connect to USB-C accessories to help expand your computer functionality. To purchase USB-C accessories, go to https://www.lenovo.com/accessories.

Note: When the battery power is below 10%, the connected USB-C accessories might not work correctly.

Statement on USB transfer rate

Depending on many factors such as the processing capability of the host and peripheral devices, file attributes, and other factors related to system configuration and operating environments, the actual transfer rate using the various USB connectors on this device will vary and will be slower than the data rate listed below for each corresponding device.

USB device	Data rate (Gbit/s)
3.2 Gen 1 / 3.1 Gen 1	5
3.2 Gen 2 / 3.1 Gen 2	10
3.2 Gen 2 × 2	20

Chapter 2. Get started with your computer

Get started with your desktop

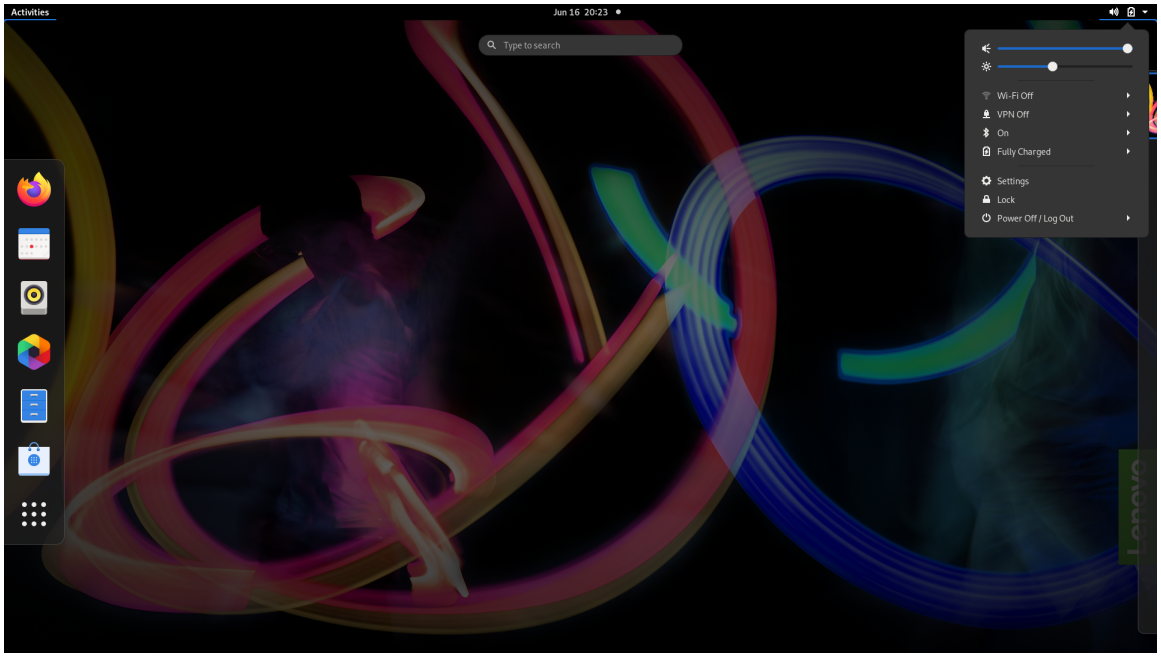

Launch an app

- Use the super key (with the Windows logo) or open the Activities menu on the top left and type in the name of the application you want to launch.
- Click the "show application" menu (For the Fedora operating system, you can see the menu after opening Activities menu) on the lower left and type in the name of the application you want to launch.

Launch settings

Select the system menu arrow on the top right and click on **Settings**.

Get support

- For the Ubuntu operating system, see the Ubuntu documentation site at https://help.ubuntu.com/lts/ubuntu-help/index.html.
- For the Fedora operating system, see the Fedora project wiki at https://fedoraproject.org/wiki/Fedora_Project_Wiki.
- The Gnome desktop is installed by default and is designed to be simple and easy to use. Details on using Gnome are available by launching the Help application or online at https://help.gnome.org/users/.

Manage networks

Your computer helps you connect to the world through a wired or wireless network.

Connect to Wi-Fi networks

1. Click the system menu arrow on the top right. A list of available wireless networks is displayed.

© Copyright Lenovo 2020

2. Select a network available for connection. Provide required information, if needed.

Airplane mode

When the Airplane mode is enabled, all wireless features are disabled.

To enable or disable the Airplane mode:

1. Use the system menu drop down (top right) and choose **Settings**.
2. Click the Wi-Fi option.
3. Turn on or turn off the **Airplane mode** switch.

Interact with your computer

Your computer provides you various ways to navigate the screen.

Use the camera

- Take pictures or record videos by using the **Cheese** application. The indicator next to the camera is on when the camera is in use.
- If you use other apps that support photographing, video chatting, and video conference, the camera starts automatically when you enable the camera-required feature from the app.

Note: IR camera support is currently limited in Linux. Make sure the regular camera is selected if you see gray lines.

Use the keyboard shortcuts

The special keys on the keyboard help you work more easily and effectively.

	Enable / disable speakers
	Decrease volume
	Increase volume
	Enable / disable microphones
	Darken display
	Brighten display
	Manage external displays
	Enable / disable wireless
*	Open Settings window
*	Enable / disable Bluetooth

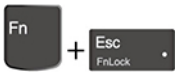	Invoke the special function printed as an icon on each key or standard function of F1–F12 function keys. FnLock indicator on: standard function FnLock indicator off: special function
Fn+Spacebar	Toggle keyboard backlight
Fn+B	Break operation
Fn+K	Scroll contents
Fn+P	Pause operation
Fn+S	Send system request
Fn+4	Enter sleep mode To wake up the computer, press Fn or the power button.
Fn+Left arrow key	Go to beginning
Fn+Right arrow key	Go to end

* for selected models

Use the TrackPoint pointing device

The TrackPoint pointing device enables you to perform all the functions of a traditional mouse, such as pointing, clicking, and scrolling.

Use the TrackPoint pointing device

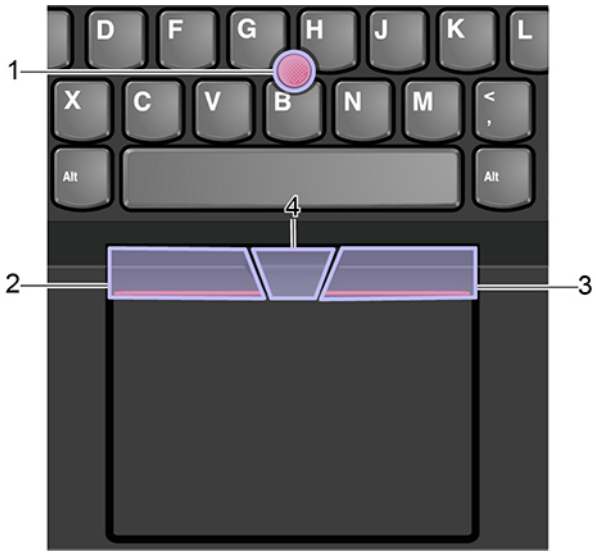

1. **Pointing stick**

Use your index finger or middle finger to apply pressure to the pointing-stick nonslip cap in any direction parallel to the keyboard. The pointer on the screen moves accordingly but the pointing stick itself does not move. The higher the pressure applied, the faster the pointer moves.

2. **Left-click button**

Press to select or open an item.

3. **Right-click button**

Press to display a shortcut menu.

4. **Middle button**

Press and hold the dotted middle button while applying pressure to the pointing stick in the vertical or horizontal direction. Then, you can scroll through the document, Web site, or apps.

Replace the pointing-stick nonslip cap

Note: Ensure that the new cap has grooves **a**.

Use the trackpad

The entire trackpad surface is sensitive to finger touch and movement. You can use the trackpad to perform all the pointing, clicking, and scrolling functions of a traditional mouse.

Use the trackpad

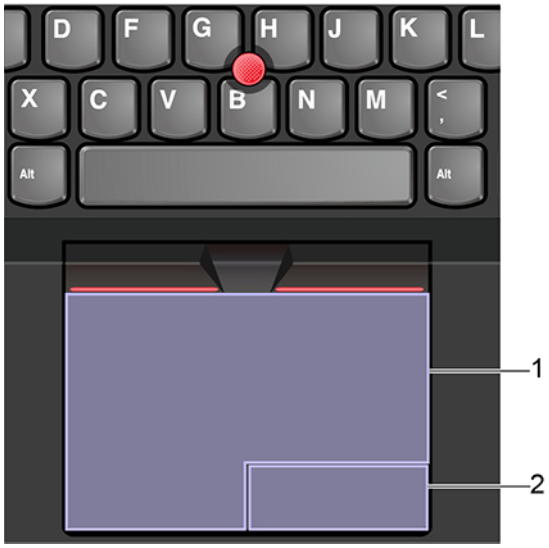

1. **Left-click zone**

Press to select or open an item.

You also can tap anywhere on the surface of the trackpad with one finger to perform the left-click action.

2. **Right-click zone**

Press to display a shortcut menu.

You also can tap anywhere on the surface of the trackpad with two fingers to perform the right-click action.

Use the touch gestures

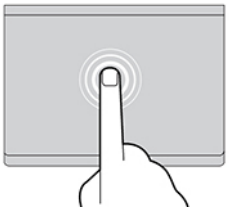

Tap

Tap anywhere on the trackpad with one finger to select or open an item.

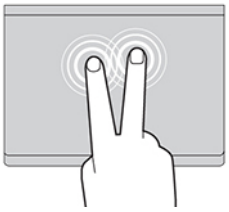

Two-finger tap

Tap anywhere on the trackpad with two fingers to display a shortcut menu.

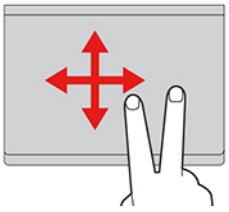

Two-finger scroll

Put two fingers on the trackpad and move them in the vertical or horizontal direction. This action enables you to scroll through the document, Web site, or apps.

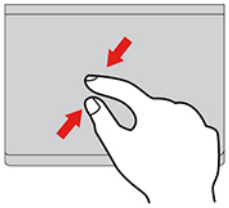

Two-finger zoom out

Put two fingers on the trackpad and move them closer together to zoom out.

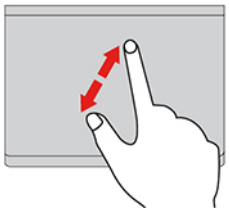

Two-finger zoom in

Put two fingers on the trackpad and move them farther apart to zoom in.

Notes:

- When using two or more fingers, ensure that you position your fingers slightly apart.
- Some gestures are not available if the last action was done from the TrackPoint pointing device.
- Some gestures are only available when you are using certain apps.
- If the trackpad surface is stained with oil, turn off the computer first. Then, gently wipe the trackpad surface with a soft and lint-free cloth moistened with lukewarm water or computer cleaner.

For more gestures, see the help information of the pointing device.

Use the multi-touch screen

If your computer display supports the multi-touch function, you can navigate the screen with simple touch gestures.

Note: Some gestures might not be available depending on the app you use.

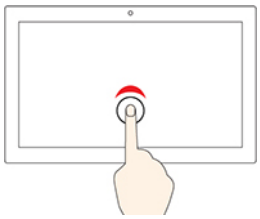

Tap once

- From the **Start** menu: Open an app or item.
- From the desktop: Select an app or item.
- In an open app: Perform an action such as **Copy**, **Save**, and **Delete**, depending on the app.

Tap twice quickly

Open an app or item from the desktop.

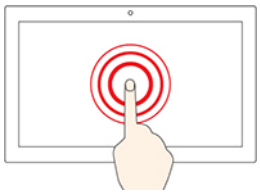

Tap and hold

Open a shortcut menu.

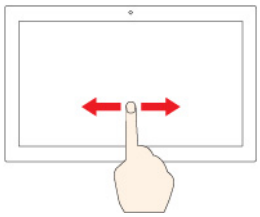

Slide

Scroll through items, such as lists, pages, and photos.

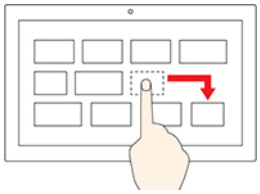

Drag an item to the location you want

Move an object.

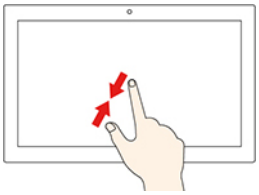

Move two fingers closer together

Zoom out.

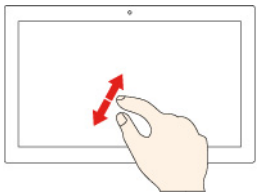

Move two fingers farther apart

Zoom in.

Tips

- Turn off the computer before cleaning the multi-touch screen.
- Use a dry, soft, and lint-free cloth or a piece of absorbent cotton to remove fingerprints or dust from the multi-touch screen. Do not apply solvents to the cloth.
- The multi-touch screen is a glass panel covered with a plastic film. Do not apply pressure or place any metallic object on the screen, which might damage the touch panel or cause it to malfunction.
- Do not use fingernails, gloved fingers, or inanimate objects for input on the screen.
- Regularly calibrate the accuracy of the finger input to avoid a discrepancy.

Connect to an external display

Connect your computer to a projector or a monitor to give presentations or expand your workspace.

Connect to a wired display

1. Connect the external display to an appropriate video connector on your computer.
2. Connect the external display to an electrical outlet.
3. Turn on the external display.

If your computer cannot detect the external display, right-click a blank area on the desktop, and then click **Display settings**.

Set the display mode

Press

or

+

and then select a display mode of your preference.

Change display settings

1. Right-click a blank area on the desktop and select **Display settings**.
2. Select the display that you want to configure.
3. Change display settings of your preference.

You can change the settings for both the computer display and the external display. For example, you can define which one is the main display and which one is the secondary display. You also can change the resolution and orientation.

Note: If you set a higher resolution for the computer display than the external display, only part of the screen can be displayed on the external display.

Use Lenovo Pen Pro (for selected models)

Depending on the model, your computer might come with a Lenovo Pen Pro (referred to as the pen in this section). The pen enables you to write and draw in a natural manner. This section introduces the basic use of the pen. For more information, refer to the documentation of the pen.

Notes:

- The color of the pen might vary by country or region of delivery. Depending on the model, the pen might look slightly different from the illustrations in this topic.
- The pen is not waterproof. Keep the pen away from water and excessive moisture.
- The pen contains pressure sensors. Apply an appropriate amount of pressure as you would when writing on the paper. Do not subject the pen to shock or vibration.
- The pen does not work when the multi-touch function is disabled in ThinkPad Setup.

Pair the pen

1. Enable Bluetooth pairing on the pen by pressing and holding the top of the pen for at least three seconds until the LED indicator flashes in green.
2. Enable Bluetooth pairing on your computer to discover and pair the pen. See “Connect to a Bluetooth-enabled device” on page 19. The pen is discoverable as Lenovo Pen Pro.

Pen overview

1. **Top pen button**: Hold the top pen button for at least three seconds to enable Bluetooth pairing on the pen.

2. **LED indicator**: The LED indicates the following status:

- Charging status
  - Solid amber: charging
  - Solid green: fully charged

- Battery power status
  - Blinking amber: battery power is less than 20% (charging recommended)
  - Off: no battery power (charging recommended) or battery power is more than 20%
- Bluetooth pairing status
  - Green, blinking once every second: pairing
  - Green, blinking five times quickly in two seconds: paired
  - Green, blinking once: the top pen button is pressed or double pressed

3. **USB-C connector**: To charge the pen, connect the pen to a USB-C connector of the computer with a USB-C cable.

4. **Top barrel button**: To right-click, hold the top barrel button and tap the screen in supported applications.

5. **Bottom barrel button**: To erase texts or drawings, hold the bottom barrel button to erase the object in supported applications.

Notes:

- The default function of each barrel button might vary in different apps.
- To customize the barrel button functions, use the Wacom Pen application. If the Wacom Pen application is not installed on your computer, download and install the latest WinTab driver from https://support.lenovo.com.

6. **Pen tip**: To click, tap on the screen with the tip. To double-click, tap twice.

Store the pen

The ThinkPad Pen Pro is delivered with a pen holder. To store the ThinkPad Pen Pro on the computer:

1. Insert the pen holder into the USB connector on the computer.

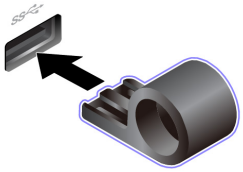

2. Insert the ThinkPad Pen Pro into the pen holder in any ways as shown.

Chapter 3. Explore your computer

Use the Intelligent Cooling feature

The Intelligent Cooling feature enables your computer to work in the following three modes:

- Quiet mode : the quietest fan noise
- Balanced mode : balanced performance and fan noise
- Performance mode : the highest performance and normal fan noise

Do the following to switch to the preferred mode:

- Press Fn+L to switch to quiet mode.
- Press Fn+M to switch to balanced mode.
- Press Fn+H to switch to performance mode.

Use the Cool and Quiet on lap feature

The Cool and Quiet on lap feature helps cool down your computer when it becomes hot. Any extended contact with your body, even through clothing, could cause discomfort. If you prefer using your computer on the lap, it is recommended that you enable the Cool and Quiet on lap feature in UEFI BIOS:

1. Enter the UEFI BIOS menu. See “Enter the UEFI BIOS menu” on page 25.
2. Click **Config** and turn on the **Cool and Quiet on lap mode** switch.

Connect to a Bluetooth-enabled device

You can connect all types of Bluetooth-enabled devices to your computer, such as a keyboard, a mouse, a smartphone, or speakers. To ensure the connection is successful, place the devices 10 meters (33 feet), at most, from the computer.

1. Turn on Bluetooth on the computer.
   - Click the system menu drop down (top right) and choose **Settings**.
   - Choose the Bluetooth menu and enable Bluetooth with the toggle button at the top.
2. Any discoverable devices will be shown in the **Devices** list.
3. Select a Bluetooth device, and then follow the on-screen instructions.

Your Bluetooth-enabled device and computer will automatically connect the next time if the two devices are in range of each other with Bluetooth turned on. You can use Bluetooth for data transfer or remote control and communication.

© Copyright Lenovo 2020

Chapter 4. Secure your computer and information

Lock the computer

Lock your computer to a desk, table, or other fixtures through a compatible security cable lock.

Note: You are responsible for evaluating, selecting, and implementing the locking device and security feature. Lenovo makes no comments, judgments, or warranties about the function, quality, or performance of the locking device and security feature. Cable locks for your product are available from Lenovo at https://smartfind.lenovo.com.

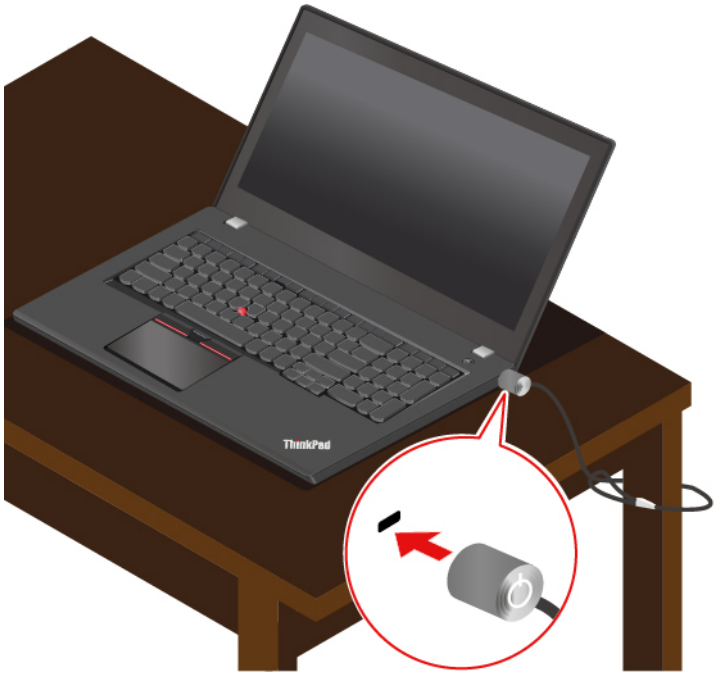

Use the fingerprint reader

If your computer comes with a fingerprint reader, you can use it to enroll your fingerprints. After enrollment, you can tap your finger on the fingerprint reader to log in to the system.

Enroll your fingerprints

Open the system menu and then click **Settings** → **Users** → **Fingerprint Login**. Then, follow the on-screen instructions to finish the enrollment.

During the enrollment, the fingerprints are associated with the user password automatically. It is recommended that you put your finger in the center of the fingerprint reader during enrollment and enroll more than one fingerprint in case of any injuries to your fingers.

© Copyright Lenovo 2020

Log in with your fingerprint

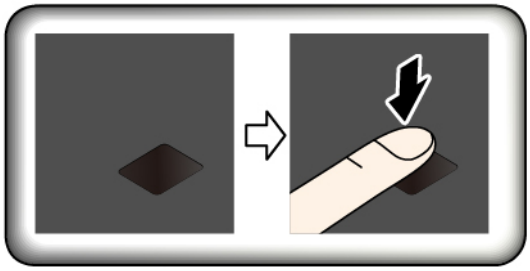

Maintain the fingerprint reader

To ensure that the fingerprint reader works correctly, do not:

- Scratch the surface of the reader with anything hard.
- Use or touch the reader with a wet, dirty, wrinkled, or injured finger.

Use passwords

This section introduces types of passwords in UEFI (Unified Extensible Firmware Interface) BIOS (Basic Input/Output System) and how to set, change, and remove a password.

Password types

You can set a power-on password, supervisor password, system management password, or hard disk password in UEFI BIOS to prevent unauthorized access to your computer. However, you are not prompted to enter any UEFI BIOS password when your computer resumes from sleep mode.

Power-on password

If you set a power-on password, a window is displayed on the screen when you turn on the computer. Enter the correct password to use the computer.

Supervisor password

The supervisor password protects the system information stored in UEFI BIOS. When entering the UEFI BIOS menu, enter the correct supervisor password in the window prompted. You also can press Enter to skip the password prompt. However, you cannot change most of the system configuration options in UEFI BIOS.

If you have set both the supervisor password and power-on password, you can use the supervisor password to access your computer when you turn it on. The supervisor password overrides the power-on password.

System management password

The system management password can also protect the system information stored in UEFI BIOS like a supervisor password, but it has lower authority by default. The system management password can be set through the UEFI BIOS menu or through Windows Management Instrumentation (WMI) with the Lenovo client-management interface.

You can enable the system management password to have the same authority as the supervisor password to control security related features. To customize the authority of the system management password through the UEFI BIOS menu:

1. Enter the UEFI BIOS menu. See “Enter the UEFI BIOS menu” on page 25.

Note: When you are prompted to enter the password, enter the correct supervisor password if a supervisor password has been set, or enter the correct system management password if no supervisor password has been set. Otherwise, you cannot change the configurations in the following steps.

2. Select **Security → Password → System Management Password Access Control**.
3. Follow the on-screen instructions.

If you have set both the supervisor password and the system management password, the supervisor password overrides the system management password. If you have set both the system management password and the power-on password, the system management password overrides the power-on password.

Hard disk passwords

The hard disk password prevents unauthorized access to the data on the storage drive. When a hard disk password is set, you are prompted to type a correct password each time you try to access the storage drive.

To set the hard disk password, select one of the following types:

- **User hard disk password only**

  When a user hard disk password is set without a master hard disk password, the user must enter the user hard disk password to access files and applications on the storage drive.
- **Master hard disk password + User hard disk password**

  The master hard disk password is set and used by a system administrator. It enables the administrator to access any storage drive in a system or any computer connected in the same network. The administrator can also assign a user hard disk password for each computer in the network. The user of the computer can change the user hard disk password as desired, but only the administrator can remove the user hard disk password.

When prompted to enter a hard disk password, press F1 to switch between the master hard disk password and user hard disk password.

Note: The hard disk password is not available when a Trusted Computing Group (TCG) Opal-compliant storage drive and a TCG Opal management software program are installed in the computer, and the TCG Opal management software program is activated.

Set, change, and remove a password

Before you start, print these instructions.

1. Restart the computer. When the logo screen is displayed, press F1 to enter the UEFI BIOS menu.
2. Select **Security → Password** by using the arrow keys.
3. Select the password type. Then, follow the on-screen instructions to set, change, or remove a password.

You should record all your passwords and store them in a safe place. If you forget any of your passwords, any potential repair actions required are not covered under warranty.

What to do if you forget your power-on password

If you forget your power-on password, do the following to remove the power-on password:

- If you have set a supervisor password and remember it:
  1. Restart the computer. When the logo screen is displayed, immediately press F1.
  2. Type the supervisor password to enter the UEFI BIOS menu.
  3. Select **Security → Password → Power-On Password** by using the arrow keys.

4. Type the current supervisor password in the **Enter Current Password** field. Then, leave the **Enter New Password** field blank, and press Enter twice.
5. In the Changes have been saved window, press Enter.
6. Press F10 to save changes and exit the UEFI BIOS menu.

- If you have not set a supervisor password, contact a Lenovo authorized service provider to have the power-on password removed.

What to do if you forget your hard disk password

If you forget your user hard disk password or both user and master hard disk passwords, Lenovo cannot reset your passwords or recover data from the storage drive. You can contact a Lenovo authorized service provider to have the storage drive replaced. A fee will be charged for parts and service. If the storage drive is a CRU (Customer Replaceable Unit), you can also contact Lenovo to purchase a new storage drive to replace the old one by yourself. To check whether the storage drive is a CRU and the relevant replacement procedure, see Chapter 6 “CRU replacement” on page 27.

What to do if you forget your supervisor password

If you forget your supervisor password, there is no service procedure to remove the password. You have to contact a Lenovo authorized service provider to have the system board replaced. A fee will be charged for parts and service.

What to do if you forget your system management password

If you forget your system management password, do the following to remove the system management password:

- If you have set a supervisor password and remember it:
  1. Restart the computer. When the logo screen is displayed, immediately press F1.
  2. Type the supervisor password to enter the UEFI BIOS menu.
  3. Select **Security → Password → System Management Password** by using the arrow keys.
  4. Type the current supervisor password in the **Enter Current Password** field. Then, leave the **Enter New Password** field blank, and press Enter twice.
  5. In the Changes have been saved window, press Enter.
  6. Press F10 to save changes and exit the UEFI BIOS menu.
- If you have not set a supervisor password, contact a Lenovo authorized service provider to have the system management password removed.

Use Power Loss Protection function (for selected models)

For models shipped with an NVMe (Non-Volatile Memory express) M.2 solid-state drive, the M.2 solid-state drive features the Lenovo-unique PLP (Power Loss Protection) function to avoid data loss or damage. On very rare occasions, your computer is not responding and you might have to shut down your computer by pressing and holding the power button for about seven seconds. In this case, the PLP function enables key data of your computer to be saved timely. However, there is no guarantee that all data is saved in any situation. To check the type of your M.2 solid-state drive:

1. Restart the computer. When the logo screen is displayed, press F10 to enter the Lenovo diagnostics window.
2. On the TOOLS tab, select **SYSTEM INFORMATION → STORAGE** using the arrow keys.
3. Locate the **Device Type** section to check the information.

Chapter 5. Configure advanced settings

UEFI BIOS

This section introduces what is UEFI BIOS and the operations you can perform in UEFI BIOS.

What is UEFI BIOS

UEFI BIOS is the first program that the computer runs when the computer is turned on. UEFI BIOS initializes the hardware components and loads the operating system and other programs. Your computer comes with a setup program with which you can change UEFI BIOS settings.

Enter the UEFI BIOS menu

Restart the computer. When the logo screen is displayed, press F1 to enter the UEFI BIOS menu.

Note: If you have set the supervisor password, enter the correct password when prompted. You also can press Enter to skip the password prompt and enter the UEFI BIOS menu. However, you cannot change the system configurations that are protected by the supervisor password.

Navigate in the UEFI BIOS interface

Attention: The default configurations are already optimized for you in **boldface**. Improper change of the configurations might cause unexpected results.

You can navigate in the UEFI BIOS interface by pressing the following keys:

F1	Display the General Help screen.
F9	Restore to the default settings.
F10	Save your configuration and exit.
F5	Change to a lower value.
F6	Change to a higher value.
↑ ↓	Locate an item.
← →	Select a tab.
Esc	Exit the submenu and return to the parent menu.
Enter	Enter the selected tab or submenu.

Change the startup sequence

1. Restart the computer. When the logo screen is displayed, press F1.
2. Select **Startup → Boot**. Then, press Enter. The default device order list is displayed.

   Note: No bootable device is displayed if the computer cannot start from any devices or the operating system cannot be found.
3. Set the startup sequence as desired.
4. Press F10 to save the changes and exit.

To change the startup sequence temporarily:

© Copyright Lenovo 2020

1. Restart the computer. When the logo screen is displayed, press F12.
2. Select the device that you want the computer to start from and press Enter.

Set the system date and time

1. Restart the computer. When the logo screen is displayed, press F1.
2. Select **Date/Time** and set the system date and time as desired.
3. Press F10 to save changes and exit.

Update UEFI BIOS

When you install a new program, device driver, or hardware component, you might need to update UEFI BIOS.

Download and install the latest UEFI BIOS update package by one of the following methods:

- Use the fwupdmgr or software utility to check LVFS for firmware updates.
- Go to https://pcsupport.lenovo.com and select the entry for your computer. Then, follow the on-screen instructions to download and install the latest UEFI BIOS update package.

Chapter 6. CRU replacement

Customer Replaceable Units (CRUs) are parts that can be upgraded or replaced by the customer. The computers contain the following types of CRUs:

- **Self-service CRUs:** Refer to parts that can be installed or replaced easily by customer themselves or by trained service technicians at an additional cost.
- **Optional-service CRUs:** Refer to parts that can be installed or replaced by customers with a greater skill level. Trained service technicians can also provide service to install or replace the parts under the type of warranty designated for the customer's machine.

If you intend on installing a CRU, Lenovo will ship the CRU to you. CRU information and replacement instructions are shipped with your product and are available from Lenovo at any time upon request. You might be required to return the defective part that is replaced by the CRU. When return is required: (1) return instructions, a prepaid shipping label, and a container will be included with the replacement CRU; and (2) you might be charged for the replacement CRU if Lenovo does not receive the defective CRU within thirty (30) days of your receipt of the replacement CRU. For full details, see the Lenovo Limited Warranty documentation at https://www.lenovo.com/warranty/llw_02.

CRU list

The following is a list of CRUs of your computer.

Self-service CRUs

- ac power adapter
- Bottom door
- M.2 solid-state drive
- Nano-SIM-card tray*
- Power Cord

Optional-service CRU

- Keyboard

* for selected models

Disable the built-in battery

Before replacing any CRU, ensure that you disable the built-in battery.

To disable the built-in battery:

1. Restart your computer. When the logo screen is displayed, immediately press F1 to enter the UEFI BIOS menu.
2. Select **Config → Power**. The **Power** submenu is displayed.
3. Select **Disable Built-in Battery** and press Enter.
4. Select **Yes** in the Setup Confirmation window. The built-in battery is disabled and the computer turns off automatically. Wait three to five minutes to let the computer cool.

© Copyright Lenovo 2020

Replace a CRU

Follow the replacement procedure to replace a CRU.

Bottom door

Prerequisite

Before you start, read *Generic Safety and Compliance Notices* and print the following instructions.

Note: Do not remove the bottom door when your computer is connected to ac power. Otherwise, there might be a risk of short circuits.

Replacement procedure

1. Disable the built-in battery. See “Disable the built-in battery” on page 27.
2. Turn off the computer and disconnect the computer from ac power and all connected cables.
3. Close the computer display and turn over the computer.
4. Loosen the screw that secures the bottom door 1 and remove the bottom door 2.

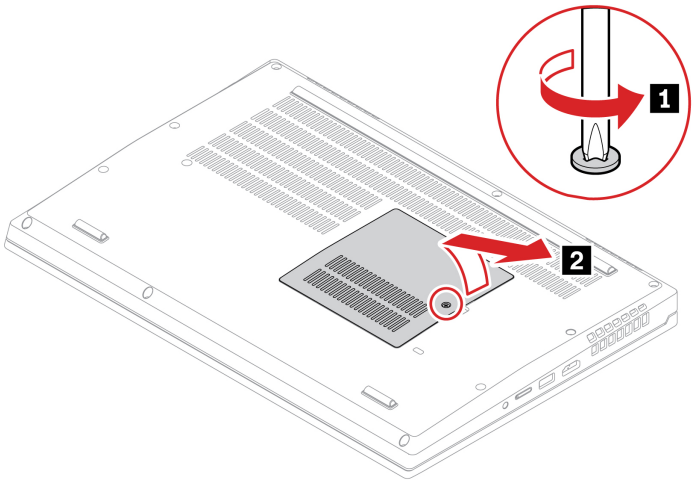

5. Install the new bottom door in place 1. Ensure that the latches of the bottom door are secured under the bottom door. Align the screw to the screw hole 2.

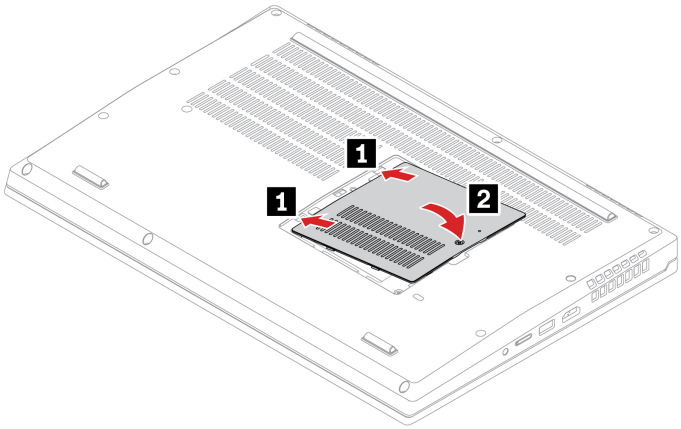

6. Tighten the screw to secure the bottom door.

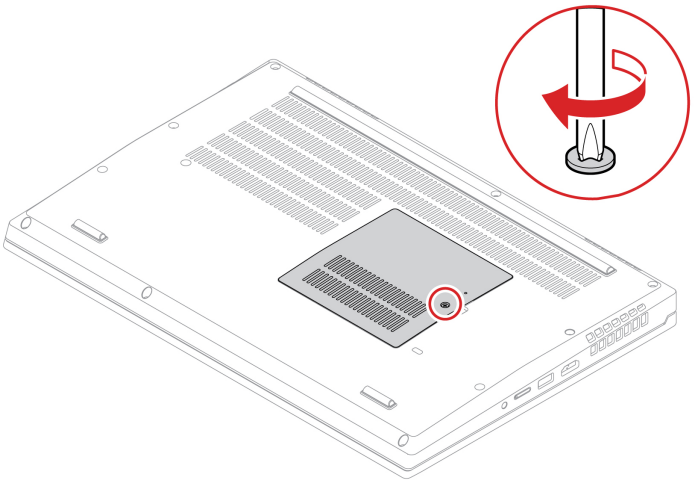

7. Turn over the computer. Connect the ac power adapter and all disconnected cables to the computer.

Troubleshooting

If the computer does not start up after you reinstall the bottom door, disconnect the ac power adapter and then reconnect it to the computer.

M.2 solid-state drive

Prerequisite

Before you start, read *Generic Safety and Compliance Notices* and print the following instructions.

Attention:

- If your computer is installed with a hybrid solid-state drive (with Intel Optane memory), go to https://support.lenovo.com/docs/tg_ssd to know the details on how to replace it.

The M.2 solid-state drive is sensitive. Inappropriate handling might cause damage and permanent loss of data.

When handling the M.2 solid-state drive, observe the following guidelines:

- Replace the M.2 solid-state drive only for upgrade or repair. The M.2 solid-state drive is not designed for frequent changes or replacement.
- Before replacing the M.2 solid-state drive, make a backup copy of all the data that you want to keep.
- Do not apply pressure to the M.2 solid-state drive.
- Do not touch the contact edge or circuit board of the M.2 solid-state drive. Otherwise, the M.2 solid-state drive might get damaged.
- Do not make the M.2 solid-state drive subject to physical shocks or vibration. Put the M.2 solid-state drive on a soft material, such as cloth, to absorb physical shocks.

Your computer has two M.2-solid-state-drive slots. When you configure the M.2-solid-state-drive slot in the UEFI BIOS menu, ensure that you select the correct menu item.If your computer is installed with only one M.2 solid-state drive, ensure that the M.2 solid-state drive is installed into slot 0.

- Slot 0: **NVMe0**
- Slot 1: **NVMe1**

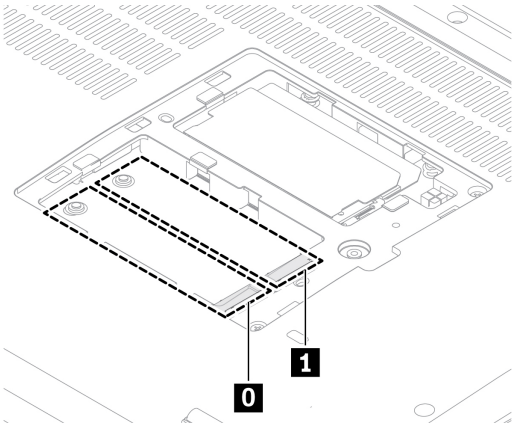

Replacement procedure

1. Disable the built-in battery. See “Disable the built-in battery” on page 27.
2. Turn off the computer and disconnect the computer from ac power and all connected cables.
3. Close the computer display and turn the computer over.
4. Remove the bottom door. See “Bottom door” on page 28.
5. Remove the M.2 solid-state drive:
   a. Open the Mylar film that covers the M.2 solid-sate drive 1.
   b. Remove the screw that secures the M.2 solid-state drive 2 and then the drive pivots upward.
   c. Carefully pull the drive out of the slot 3.

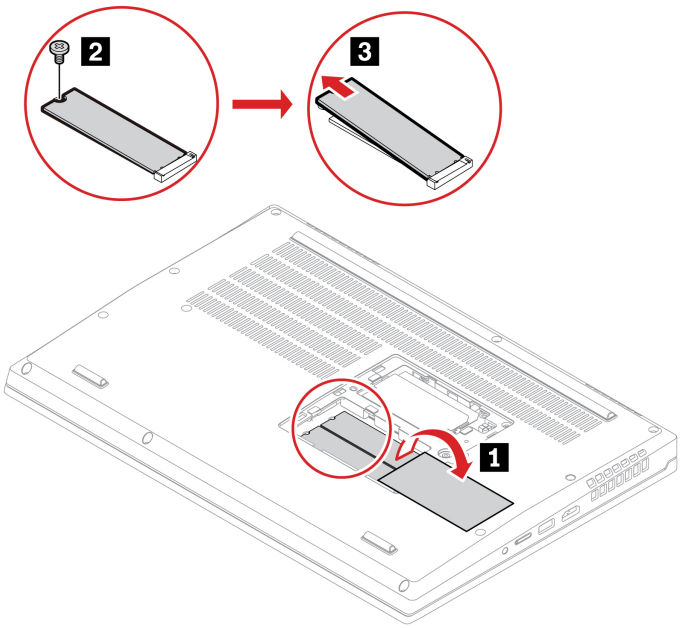

6. Install a new M.2 solid-state drive:
   a. Open the Mylar film 1.
   b. Align the contact edge of the new M.2 solid-state drive with the key in the slot 2. Then, carefully insert the drive into the slot at an angle of about 20 degrees and pivot the M.2 solid-state drive downward 3.
   c. Install the screw to secure the M.2 solid-state drive 4.
   d. Cover the M.2 solid-state drive with the Mylar film.

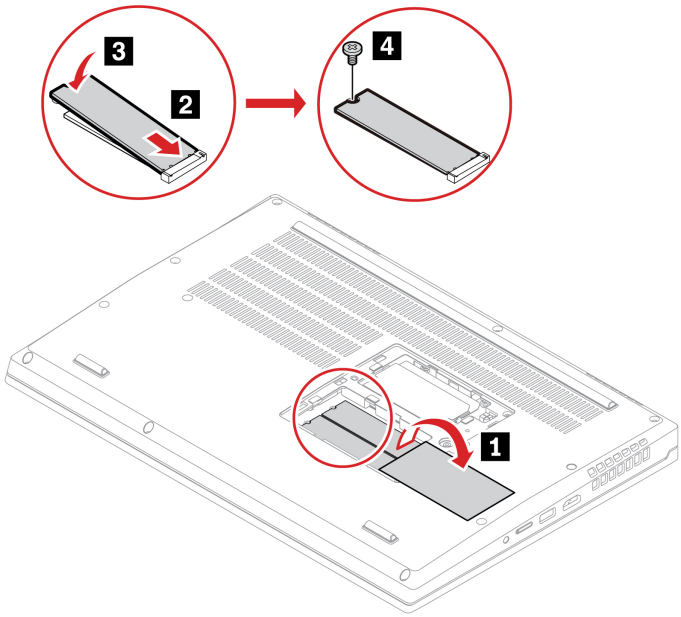

7. Reinstall the bottom door.
8. Turn over the computer. Connect the ac power adapter and all disconnected cables to the computer.

Keyboard

Prerequisite

Before you start, read *Generic Safety and Compliance Notices* and print the following instructions.

Replacement procedure

Note: You might be instructed to slide the keyboard frame forward or backward in some of the following steps. In this case, ensure that you do not press or hold the keys while sliding the keyboard frame. Otherwise, the keyboard frame cannot be moved.

1. Disable the built-in battery. See “Disable the built-in battery” on page 27.
2. Turn off the computer and disconnect the computer from ac power and all connected cables.
3. Remove the bottom door. See “Bottom door” on page 28.

4. Loosen the screws that secure the keyboard.

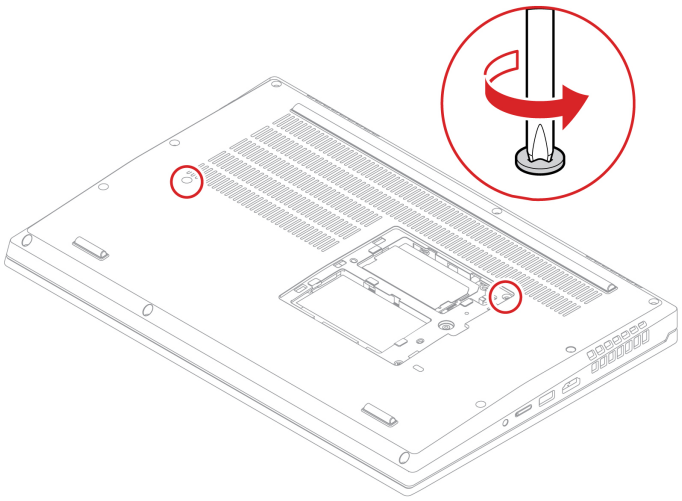

5. Push the keyboard in the direction as shown to release the latches from the keyboard bezel.

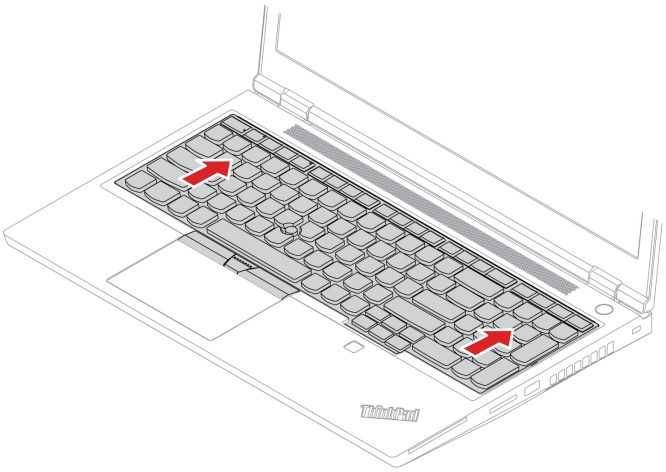

6. Pivot the keyboard slightly upward **1** and then turn over the keyboard **2**.

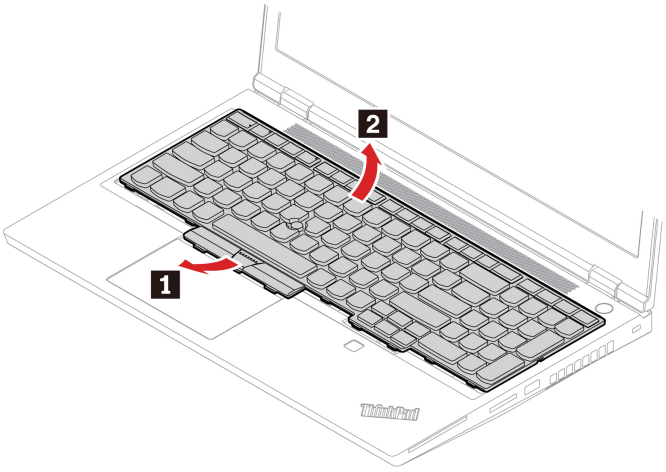

7. Put the keyboard on the palm rest as shown and detach the connectors. Then, remove the keyboard.

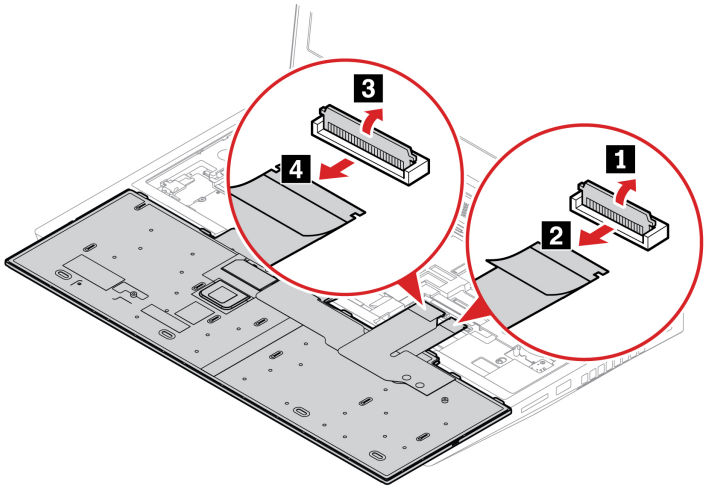

8. Attach the connectors and then turn over the keyboard.

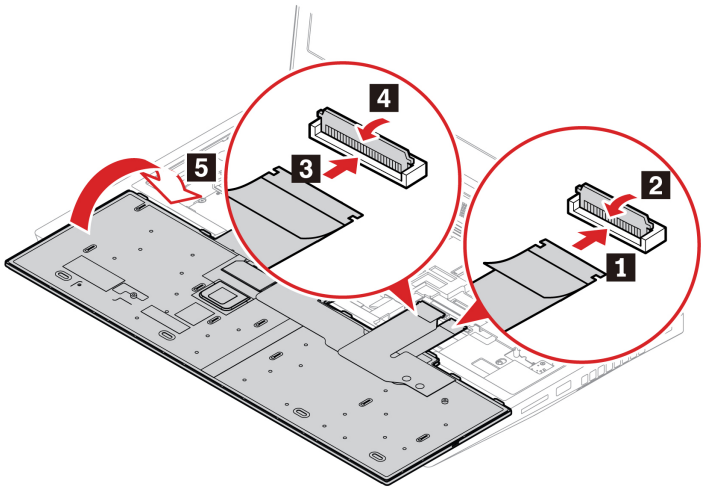

9. Insert the keyboard into the keyboard bezel as shown. Ensure that the top edge of the keyboard (the edge that is close to the display) is under the keyboard bezel.

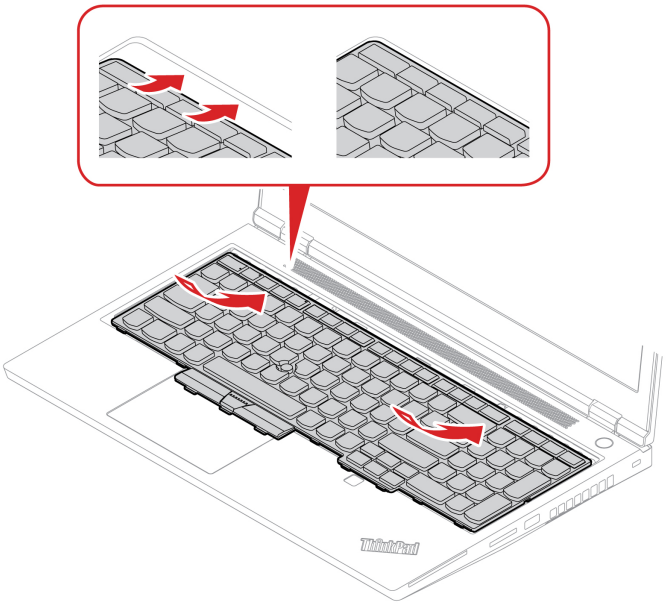

10. Slide the keyboard in the direction as shown. Ensure that the latches are secured under the keyboard frame.

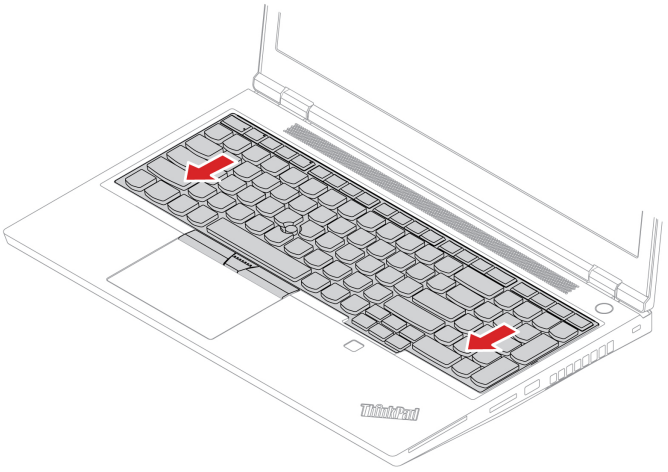

11. Tighten the screws to secure the keyboard.

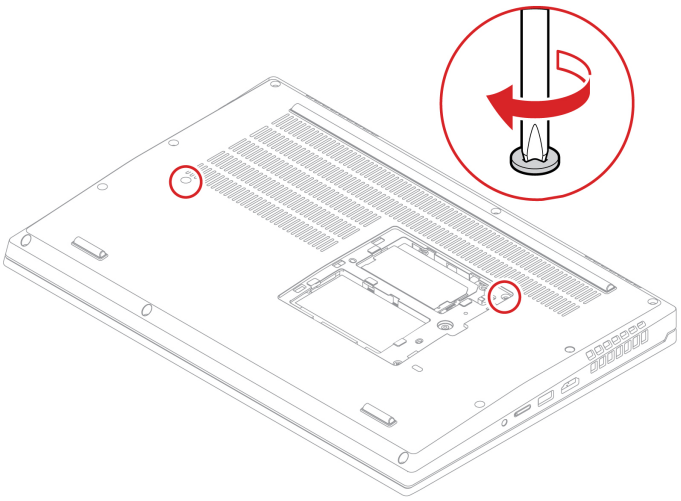

12. Reinstall the bottom door. Then, turn over the computer.
13. Connect the ac power adapter and all disconnected cables to the computer.
14. Configure the keyboard language in UEFI BIOS:
    a. Enter the UEFI BIOS menu. See “Enter the UEFI BIOS menu” on page 25.
    b. Click **Config → Keyboard/Mouse → Keyboard Layout**, and then select your keyboard language.

Chapter 7. Help and support

Frequently asked questions

How do I access **Settings**?	Open the system menu drop down (top right) and click **Settings**.
How do I turn off my computer?	From the system menu (top right) click ⏻, and then click **Power Off**.
What do I do if my computer stops responding.	1. Press and hold the power button until the computer turns off. Then, restart the computer. 2. If step 1 does not work: • For models with an emergency reset hole: Insert a straightened paper clip into the emergency reset hole to cut off power supply temporarily. Then, restart the computer with ac power connected. • For models without an emergency reset hole: – For models with the removable battery, remove the removable battery and disconnect all power sources. Then, reconnect to ac power and restart the computer. – For models with the built-in battery, disconnect all power sources. Press and hold the power button for about seven seconds. Then, reconnect to ac power and restart the computer.
What do I do if I spill liquid on the computer?	1. Carefully unplug the ac power adapter and turn off the computer immediately. The more quickly you stop the current from passing through the computer the more likely you will reduce damage from short circuits. **Attention:** Although you might lose some data or work by turning off the computer immediately, leaving the computer on might make your computer unusable. 2. Do not try to drain out the liquid by turning over the computer. If your computer has keyboard drainage holes on the bottom, the liquid will be drained out through the holes. 3. Wait until you are certain that all the liquid is dry before turning on your computer.
How do I enter the UEFI BIOS menu?	Restart the computer. When the logo screen is displayed, press F1 to enter the UEFI BIOS menu.
How do I disable my trackpad?	1. Open the system menu, and then click **Settings → Mouse & Touchpad**. 2. In the Touchpad section, turn off the **Touchpad** control.
Where can I get the latest device drivers and UEFI BIOS?	Use the Software application to check for updates. It should notify when new firmware is available on LVFS (https://fwupd.org/).

© Copyright Lenovo 2020

Error messages

If you see a message that is not included in the following table, record the error message first, then shut down the computer and call Lenovo for help. See “Lenovo Customer Support Center” on page 42.

Message	Solution
0190: Critical low-battery error	The computer turned off because the battery power is low. Connect the ac power adapter to the computer and charge the batteries.
0191: System Security - Invalid remote change requested	The system configuration change has failed. Confirm the operation and try again.
0199: System Security - Security password retry count exceeded.	This message is displayed when you enter a wrong supervisor password more than three times. Confirm the supervisor password and try again.
0271: Check Date and Time settings.	The date or the time is not set in the computer. Enter the UEFI BIOS menu and set the date and time.
210x/211x: Detection/Read error on HDDx/SSDx	The storage drive is not working. Reinstall the storage drive. If the problem still exists, replace the storage drive.
Error: The non-volatile system UEFI variable storage is nearly full.	**Note:** This error indicates that the operating system or programs cannot create, modify, or delete data in the non-volatile system UEFI variable storage due to insufficient storage space after POST. The non-volatile system UEFI variable storage is used by the UEFI BIOS and by the operating system or programs. This error occurs when the operating system or programs store large amounts of data in the variable storage. All data needed for POST, such as UEFI BIOS setup settings, chipset, or platform configuration data, are stored in a separate UEFI variable storage. Press F1 after the error message is displayed to enter the UEFI BIOS menu. A dialog asks for confirmation to clean up the storage. If you select “Yes”, all data that were created by the operating system or programs will be deleted except global variables defined by the Unified Extensible Firmware Interface Specification. If you select “No”, all data will be kept, but the operating system or programs will not be able to create, modify, or delete data in the storage. If this error happens at a service center, Lenovo authorized service personnel will clean up the non-volatile system UEFI variable storage using the preceding solution.
Fan error. Press ESC to startup with limited performance	The thermal fan might not work correctly. After the error message is displayed, press ESC within five seconds to start up the computer with limited performance. Otherwise, the computer will shut down immediately. If the problem still exists when you starts up next time, have your computer serviced.

Beep errors

Lenovo SmartBeep technology enables you to decode beep errors with your smartphone when a black screen occurs with beeps from your computer. To decode the beep error with Lenovo SmartBeep technology:

1. Go to https://support.lenovo.com/smartbeep or scan the following QR Code.

2. Download the proper diagnostic app and install it on your smartphone.
3. Run the diagnostic app and place the smartphone near the computer.
4. Press Fn on your computer to emit the beep again. The diagnostic app decodes the beep error and shows possible solutions on the smartphone.

Note: Do not attempt to service a product yourself unless instructed to do so by the Customer Support Center or product documentation. Only use a Lenovo-authorized service provider to repair your product.

Self-help resources

Use the following self-help resources to learn more about the computer and troubleshoot problems.

Access product documentation

- *Safety and Warranty Guide*
- *Setup Guide*
- This *User Guide*
- *Regulatory Notice*

Visit the Lenovo support Web site

https://pcsupport.lenovo.com

- Drivers and software
- Diagnostic solutions
- Product and service warranty
- Product and parts details
- Knowledge base and frequently asked questions

Access the Lenovo Limited Warranty

This product is covered by the terms of the Lenovo Limited Warranty (LLW), version L505-0010-02 08/2011. You can view the LLW in a number of languages from the following Web site. Read the Lenovo Limited Warranty at:

https://www.lenovo.com/warranty/llw_02

The LLW also is preinstalled on the computer. To access the LLW, go to /opt/Lenovo

If you cannot view the LLW either from the Web site or from your computer, contact your local Lenovo office or reseller to obtain a printed version of the LLW.

Access Linux distributions

Linux is an open-source operating system, and popular Linux distributions include Ubuntu and Fedora.

To learn more about the Ubuntu operating system, go to:

https://www.ubuntu.com

To learn more about the Fedora operating system, go to:

https://getfedora.org/

Get support information

If you need help, service, technical assistance, or more information about the Linux operating system or other applications, contact the provider of the Linux operating system or the provider of the application. If you need the service and support for hardware components shipped with your computer, contact Lenovo.

To access the latest *User Guide* and *Safety and Warranty Guide*, go to:

https://pcsupport.lenovo.com

Access open-source information

This device includes software made publicly available by Lenovo, including software licensed under the General Public License and/or the Lesser General Public License (the open source software).

You may obtain a copy of the corresponding source code for any such open source software licensed under the General Public License and/or the Lesser General Public License (or any other license requiring us to make a written offer to provide corresponding source code to you) from Lenovo for a period of three years without charge except for the cost of media, shipping, and handling, upon written request to Lenovo. This offer is valid to anyone in receipt of this Device.

You may send your request in writing to the address below accompanied by a check or money order for $15 to:

Lenovo Legal Department
Attn: Open Source Team / Source Code Requests
8001 Development Dr.
Morrisville, NC 27560

Please include the version of the OS and the version of the Linux Kernel pre-shipped on this Device as part of your request. Be sure to provide a return address.

The open source software is distributed in hope it will be useful, but WITHOUT ANY WARRANTY; without even the implied warranty of MERCHANTABILITY or FITNESS FOR A PARTICULAR PURPOSE. See for example the GNU General Public License and/or the Lesser General Public License for more information.

To view additional information regarding licenses, acknowledgments and required copyright notices for the open source software shipped on your Device, go to `/usr/share/licences/*`.

Call Lenovo

If you have tried to correct the problem yourself and still need help, you can call Lenovo Customer Support Center.

Before you contact Lenovo

Prepare the following before you contact Lenovo:

1. Record the problem symptoms and details:
   - What is the problem? Is it continuous or intermittent?
   - Any error message or error code?
   - What operating system are you using? Which version?
   - Which software applications were running at the time of the problem?
   - Can the problem be reproduced? If so, how?
2. Record the system information:
   - Product name
   - Machine type and serial number

     The following illustration shows where to find the machine type and serial number of your computer.

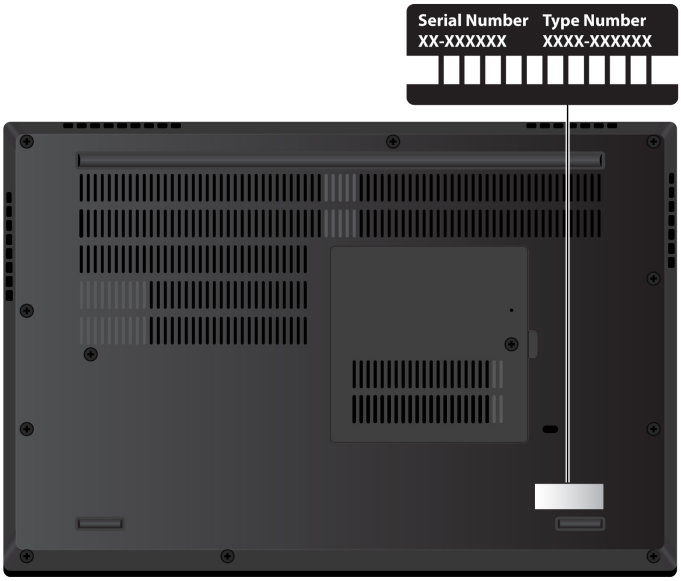

Lenovo Customer Support Center

During the warranty period, you can call Lenovo Customer Support Center for help.

Telephone numbers

For a list of the Lenovo Support phone numbers for your country or region, go to https://pcsupport.lenovo.com/supportphonelist for the latest phone numbers.

Note: Phone numbers are subject to change without notice. If the number for your country or region is not provided, contact your Lenovo reseller or Lenovo marketing representative.

Services available during the warranty period

- Problem determination - Trained personnel are available to assist you with determining if you have a hardware problem and deciding what action is necessary to fix the problem.
- Lenovo hardware repair - If the problem is determined to be caused by Lenovo hardware under warranty, trained service personnel are available to provide the applicable level of service.
- Engineering change management - Occasionally, there might be changes that are required after a product has been sold. Lenovo or your reseller, if authorized by Lenovo, will make selected Engineering Changes (ECs) that apply to your hardware available.

Services not covered

- Replacement or use of parts not manufactured for or by Lenovo or nonwarranted parts
- Identification of software problem sources
- Configuration of UEFI BIOS as part of an installation or upgrade
- Changes, modifications, or upgrades to device drivers
- Installation and maintenance of network operating systems (NOS)
- Installation and maintenance of programs

For the terms and conditions of the Lenovo Limited Warranty that apply to your Lenovo hardware product, see “Warranty information” in the *Safety and Warranty Guide* that comes with your computer.

Purchase additional services

During and after the warranty period, you can purchase additional services from Lenovo at https://www.lenovo.com/services.

Service availability and service name might vary by country or region.

Appendix A. Ergonomic information

Ergonomic information

Good ergonomic practice is important to get the most from your personal computer and to avoid discomfort. Arrange your workplace and the equipment you use to suit your individual needs and the kind of work that you perform. In addition, use healthy work habits to maximize your performance and comfort when using your computer.

Working in the virtual office might mean adapting to frequent changes in your environment. Adapting to the surrounding light sources, active seating, and the placement of your computer hardware, can help you improve your performance and achieve greater comfort.

This example shows someone in a conventional setting. Even when not in such a setting, you can follow many of these tips. Develop good habits, and they will serve you well.

General posture: Make minor modifications in your working posture to deter the onset of discomfort caused by long periods of working in the same position. Frequent short breaks from your work also help to prevent minor discomfort associated with your working posture.

Display: Position the display to maintain a comfortable viewing distance of 510 mm to 760 mm (20 inches to 30 inches). Avoid glare or reflections on the display from overhead lighting or outside sources of light. Keep the display screen clean and set the brightness to levels that enable you to see the screen clearly. Press the brightness control keys to adjust display brightness.

Head position: Keep your head and neck in a comfortable and neutral (vertical, or upright) position.

Chair: Use a chair that gives you good back support and seat height adjustment. Use chair adjustments to best suit your comfort posture.

Arm and hand position: If available, use chair arm rests or an area on your working surface to provide weight support for your arms. Keep your forearms, wrists, and hands in a relaxed and neutral (horizontal) position. Type with a soft touch without pounding the keys.

Leg position: Keep your thighs parallel to the floor and your feet flat on the floor or on a footrest.

What if you are traveling?

It might not be possible to observe the best ergonomic practices when you are using your computer while on the move or in a casual setting. Regardless of the setting, try to observe as many of the tips as possible.

© Copyright Lenovo 2020

Sitting properly and using adequate lighting, for example, helps you maintain desirable levels of comfort and performance. If your work area is not in an office setting, ensure to take special note of employing active sitting and taking work breaks. Many product solutions are available to help you modify and expand your computer to best suit your needs. You can find some of these options at https://www.lenovo.com/accessories. Explore your options for docking solutions and external products that provide the adjustability and features that you want.

Questions about vision?

The visual display screens of notebook computers are designed to meet the highest standards. These visual display screens provide you with clear, crisp images and large, bright displays that are easy to see, yet easy on the eyes. Any concentrated and sustained visual activity can be tiring. If you have questions on eye fatigue or visual discomfort, consult a vision-care specialist for advice.

Appendix B. Compliance information

Note: For more compliance information, refer to *Safety and Compliance Guide* at https://pcsupport.lenovo.com.

Certification-related information

Product name	Compliance ID	Machine types
ThinkPad P15 Gen 1	TP00124A /TP00124B*	20ST and 20SU
ThinkPad T15g Gen 1	TP00124A /TP00124B*	20UR and 20US

*for India only

The latest compliance information is available at:

https://www.lenovo.com/compliance

Locate the UltraConnect wireless antennas

Your computer has an UltraConnect™ wireless antenna system. You can enable wireless communication wherever you are.

© Copyright Lenovo 2020

The following illustration shows the antenna locations on your computer:

1 Wireless LAN antenna (auxiliary)
2 Wireless WAN antenna (main, for selected models)
3 Wireless WAN antenna (auxiliary, for selected models)
4 Wireless LAN antenna (main)
5 4x4 MIMO Wireless-WAN antenna (main, for selected models)
6 4x4 MIMO Wireless-WAN antenna (auxiliary, for selected models)

Federal Communications Commission (FCC) Supplier's Declaration of Conformity

The following information refers to:

Product name	machine types	Compliance ID
ThinkPad P15 Gen 1	20ST and 20SU	TP00124A /TP00124B*
ThinkPad P15g Gen 1	20UR and 20US	TP00124A /TP00124B*

*for India only

This equipment has been tested and found to comply with the limits for a Class B digital device, pursuant to Part 15 of the FCC Rules. These limits are designed to provide reasonable protection against harmful

interference in a residential installation. This equipment generates, uses, and can radiate radio frequency energy and, if not installed and used in accordance with the instructions, may cause harmful interference to radio communications. However, there is no guarantee that interference will not occur in a particular installation. If this equipment does cause harmful interference to radio or television reception, which can be determined by turning the equipment off and on, the user is encouraged to try to correct the interference by one or more of the following measures:

- Reorient or relocate the receiving antenna.
- Increase the separation between the equipment and receiver.
- Connect the equipment into an outlet on a circuit different from that to which the receiver is connected.
- Consult an authorized dealer or service representative for help.

Lenovo is not responsible for any radio or television interference caused by using other than recommended cables and connectors or by unauthorized changes or modifications to this equipment. Unauthorized changes or modifications could void the user's authority to operate the equipment.

This device complies with Part 15 of the FCC Rules. Operation is subject to the following two conditions: (1) this device may not cause harmful interference, and (2) this device must accept any interference received, including interference that may cause undesired operation.

Responsible Party:
Lenovo (United States) Incorporated
7001 Development Drive
Morrisville, NC 27560
Email: FCC@lenovo.com

Korea SAR statement

무선설비 전파 혼신 **(사용주파수 2400～2483.5 , 5725～5825 무선제품해당)**

해당 무선설비가 전파혼신 가능성이 있으므로 인명안전과 관련된 서비스는 할 수 없음

SAR 정보

본 장치는 전파 노출에 대한 가이드라인을 충족합니다.

본 장치는 무선 송수신기 입니다. 본 장치는 국제 가이드라인으로 권장되는 전파 노출에 대한 제한을 초과하지 않도록 설계되었습니다. 장치 액세서리 및 최신 부품을 사용할 경우 SAR 값이 달라질 수 있 습니다. SAR 값은 국가 보고 및 테스트 요구 사항과 네트워크 대역에 따라 다를 수 있습니다. 본 장치 는 사람의 신체에서 20mm 이상의 거리에서 사용할 수 있습니다.

Operating environment

Maximum altitude (without pressurization)

3048 m (10 000 ft)

Temperature

- Operating: 5°C to 35°C (41°F to 95°F)
- Storage and transportation in original shipping packaging: -20°C to 60°C (-4°F to 140°F)
- Storage without packaging: 5°C to 43°C (41°F to 109°F)

Note: When you charge the battery, its temperature must be no lower than 10°C (50°F).

Relative humidity

- Operating: 8% to 95% at wet-bulb temperature 23°C (73°F)
- Storage and transportation: 5% to 95% at wet-bulb temperature 27°C (81°F)

Regulatory labels

Depending on your country or region, you can find the government-required regulatory information through one of the following methods:

- On a physical label attached to the outside of your computer shipping carton
- On a physical label attached to your computer
- Through an electronic-label screen (E-label screen) preinstalled on your computer

To access the E-label screen, restart the computer. When the logo screen is displayed, press F9, or tap the prompt to enter the Startup Interrupt menu and the Regulatory Information option subsequently.

Korean E-label notice

이 제품은 전자적표시(e-labelling)가 되어있습니다.

Appendix C. Notices and trademarks

Notices

Lenovo may not offer the products, services, or features discussed in this document in all countries. Consult your local Lenovo representative for information on the products and services currently available in your area. Any reference to a Lenovo product, program, or service is not intended to state or imply that only that Lenovo product, program, or service may be used. Any functionally equivalent product, program, or service that does not infringe any Lenovo intellectual property right may be used instead. However, it is the user's responsibility to evaluate and verify the operation of any other product, program, or service.

Lenovo may have patents or pending patent programs covering subject matter described in this document. The furnishing of this document does not give you any license to these patents. You can send license inquiries, in writing, to:

Lenovo (United States), Inc.
8001 Development Drive
Morrisville, NC 27560
U.S.A.
Attention: Lenovo Director of Licensing

LENOVO PROVIDES THIS PUBLICATION "AS IS" WITHOUT WARRANTY OF ANY KIND, EITHER EXPRESS OR IMPLIED, INCLUDING, BUT NOT LIMITED TO, THE IMPLIED WARRANTIES OF NON-INFRINGEMENT, MERCHANTABILITY OR FITNESS FOR A PARTICULAR PURPOSE. Some jurisdictions do not allow disclaimer of express or implied warranties in certain transactions, therefore, this statement may not apply to you.

Changes are made periodically to the information herein; these changes will be incorporated in new editions of the publication. To provide better service, Lenovo reserves the right to improve and/or modify the products and software programs described in the manuals included with your computer, and the content of the manual, at any time without additional notice.

The software interface and function and hardware configuration described in the manuals included with your computer might not match exactly the actual configuration of the computer that you purchase. For the configuration of the product, refer to the related contract (if any) or product packing list, or consult the distributor for the product sales. Lenovo may use or distribute any of the information you supply in any way it believes appropriate without incurring any obligation to you.

The products described in this document are not intended for use in implantation or other life support applications where malfunction may result in injury or death to persons. The information contained in this document does not affect or change Lenovo product specifications or warranties. Nothing in this document shall operate as an express or implied license or indemnity under the intellectual property rights of Lenovo or third parties. All information contained in this document was obtained in specific environments and is presented as an illustration. The result obtained in other operating environments may vary.

Lenovo may use or distribute any of the information you supply in any way it believes appropriate without incurring any obligation to you.

Any references in this publication to non-Lenovo Web sites are provided for convenience only and do not in any manner serve as an endorsement of those Web sites. The materials at those Web sites are not part of the materials for this Lenovo product, and use of those Web sites is at your own risk.

© Copyright Lenovo 2020

Any performance data contained herein was determined in a controlled environment. Therefore, the result obtained in other operating environments may vary significantly. Some measurements may have been made on development-level systems and there is no guarantee that these measurements will be the same on generally available systems. Furthermore, some measurements may have been estimated through extrapolation. Actual results may vary. Users of this document should verify the applicable data for their specific environment.

This document is copyrighted by Lenovo and is not covered by any open source license, including any Linux agreement(s) which may accompany software included with this product. Lenovo may update this document at any time without notice.

For the latest information or any questions or comments, contact or visit the Lenovo Web site:

https://support.lenovo.com

Trademarks

LENOVO, LENOVO logo, THINKPAD, THINKPAD logo, TRACKPOINT, and ULTRACONNECT are trademarks of Lenovo. Intel, and Thunderbolt are trademarks of Intel Corporation or its subsidiaries in the U.S. and/or other countries. Linux is the registered trademark of Linus Torvalds in the U.S. and other countries. “Ubuntu” is a registered trademark of Canonical Ltd. “Fedora” is a registered trademark of Red Hat, Inc. The terms HDMI and HDMI High-Definition Multimedia Interface are trademarks or registered trademarks of HDMI Licensing LLC in the United States and other countries. Wi-Fi, Wi-Fi Alliance, and Miracast are registered trademarks of Wi-Fi Alliance. USB-C is a trademark of USB Implementers Forum. All other trademarks are the property of their respective owners. © 2020 Lenovo.

Lenovo