ThinkPad

ThinkPad® X300
Hardware Maintenance Manual

ThinkPad

ThinkPad® X300
Hardware Maintenance Manual

Note

Before using this information and the product it supports, be sure to read the general information under “Notices” on page 135.

Third Edition (July 2008)

© Copyright Lenovo 2008. All rights reserved.

LENOVO products, data, computer software, and services have been developed exclusively at private expense and are sold to governmental entities as commercial items as defined by 48 C.F.R. 2.101 with limited and restricted rights to use, reproduction and disclosure.

LIMITED AND RESTRICTED RIGHTS NOTICE: If products, data, computer software, or services are delivered pursuant a General Services Administration ″GSA″ contract, use, reproduction, or disclosure is subject to restrictions set forth in Contract No. GS-35F-05925.

© 2008 Lenovo

Contents

About this manual v

Safety information 1
General safety 2
Electrical safety 3
Safety inspection guide 5
Handling devices that are sensitive to electrostatic discharge 6
Grounding requirements 6
Safety notices: multilingual translations 7
Laser compliance statement 14

Important service information 17
Strategy for replacing FRUs 17
Strategy for replacing a hard disk drive 18
Important notice for replacing a system board . . 18
How to use error message 18
Strategy for replacing FRUs for CTO, CMV, and GAV 19
Product definition 19
FRU identification for CTO, CMV, and GAV products 19
Important information about replacing RoHS compliant FRUs 21

General checkout 23
What to do first 24
Checkout guide 25
Diagnostics using PC-Doctor for DOS 26
PC-Doctor for Windows 28
PC-Doctor for Rescue and Recovery 28
Power system checkout 29
Checking the AC adapter 29
Checking operational charging 30
Checking the battery pack 30
Checking the backup battery 31

Related service information 33
Restoring the factory contents by using Product Recovery discs 33
Passwords 34
Power-on password 34
Hard-disk password 34
Supervisor password 34
How to remove the power-on password 35
How to remove the hard-disk password 35
Power management 37
Screen blank mode 37
Standby mode 37
Hibernation mode 38
Symptom-to-FRU index 39
Numeric error codes 39
Error messages 43
Beep symptoms 44
No-beep symptoms 44
LCD-related symptoms 45
Intermittent problems 46
Undetermined problems 46

ThinkPad X300 47
Specifications 47
Status indicators 49
FRU tests 51
Fn key combinations 53
FRU replacement notices 55
Screw notices 55
Retaining serial numbers 56
Removing and replacing a FRU 59
Before servicing ThinkPad X300 60
1010 Battery pack 61
1020 Second battery or travel cover (some models) 62
1030 Solid state drive (SSD) 63
1040 DIMM 65
1050 PCI Express Mini Card for wireless LAN . . 67
1060 Wireless USB adapter 70
1070 Keyboard 73
1080 Optical drive 77
1090 Backup battery 78
1100 PCI Express Mini Card for wireless WAN 79
1110 Palm rest or palm rest with fingerprint reader 81
1120 ***Bluetooth*** daughter card (BDC-2) 84
1130 Keyboard bezel 85
1140 Audio FPC and audio sub card 88
1150 Speaker assembly 90
1160 LCD assembly 91
1170 VGA cable and DC-in connector 94
1180 System board, fan, and base cover assembly 96
2010 LCD bezel assembly 102
2020 LCD panel and LCD cable 103
2030 Integrated camera 107
2040 Antenna assembly 108
2050 Hinge L and hinge R 111
2060 LED sub card, LED cable and LCD cover assembly 113
Locations 115
Front view 115
Rear view 116
Bottom view 116
Parts list 117
Overall 118
LCD FRUs 123
Keyboard 125
Miscellaneous parts 126
AC adapters 128
Power cords 129
Recovery discs 130
Common service tools 133

© Copyright Lenovo 2008

Notices 135
Trademarks 136

About this manual

This manual contains service and reference information for the following ThinkPad® products.

ThinkPad X300
MT 2748, 2749, 4052, 4183, 6476, 6477, and 6478

Use this manual along with the advanced diagnostic tests to troubleshoot problems.

The manual is divided into sections as follows:

- The common sections provide general information, guidelines, and safety information required in servicing computers.
- The product-specific section includes service, reference, and product-specific parts information.

Important:
This manual is intended only for trained servicers who are familiar with ThinkPad products. Use this manual along with the advanced diagnostic tests to troubleshoot problems effectively.

Before servicing a ThinkPad product, be sure to read all the information under "Safety information" on page 1 and "Important service information" on page 17.

© Copyright Lenovo 2008

Safety information

This chapter presents following safety information that you need to be familiar with before you service a ThinkPad computer.

- "General safety" on page 2
- "Electrical safety" on page 3
- "Safety inspection guide" on page 5
- "Handling devices that are sensitive to electrostatic discharge" on page 6
- "Grounding requirements" on page 6
- "Safety notices: multilingual translations" on page 7
- "Laser compliance statement" on page 14

© Copyright Lenovo 2008

General safety

Follow these rules to ensure general safety:

- Observe good housekeeping in the area of the machines during and after maintenance.
- When lifting any heavy object:
  1. Make sure that you can stand safely without slipping.
  2. Distribute the weight of the object equally between your feet.
  3. Use a slow lifting force. Never move suddenly or twist when you attempt to lift.
  4. Lift by standing or by pushing up with your leg muscles; this action removes the strain from the muscles in your back. *Do not attempt to lift any object that weighs more than 16 kg (35 lb) or that you think is too heavy for you.*
- Do not perform any action that causes hazards to the customer, or that makes the equipment unsafe.
- Before you start the machine, make sure that other service representatives and the customer's personnel are not in a hazardous position.
- Place removed covers and other parts in a safe place, away from all personnel, while you are servicing the machine.
- Keep your toolcase away from walk areas so that other people will not trip over it.
- Do not wear loose clothing that can be trapped in the moving parts of a machine. Make sure that your sleeves are fastened or rolled up above your elbows. If your hair is long, fasten it.
- Insert the ends of your necktie or scarf inside clothing or fasten it with a nonconductive clip, about 8 centimeters (3 inches) from the end.
- Do not wear jewelry, chains, metal-frame eyeglasses, or metal fasteners for your clothing.

  Attention: Metal objects are good electrical conductors.
- Wear safety glasses when you are hammering, drilling, soldering, cutting wire, attaching springs, using solvents, or working in any other conditions that might be hazardous to your eyes.
- After service, reinstall all safety shields, guards, labels, and ground wires. Replace any safety device that is worn or defective.
- Reinstall all covers correctly before returning the machine to the customer.
- Fan louvers on the machine help to prevent overheating of internal components. Do not obstruct fan louvers or cover them with labels or stickers.

Electrical safety

Observe the following rules when working on electrical equipment.

> **Important:**
> Use only approved tools and test equipment. Some hand tools have handles covered with a soft material that does not insulate you when working with live electrical currents.
>
> Many customers have, near their equipment, rubber floor mats that contain small conductive fibers to decrease electrostatic discharges. Do not use this type of mat to protect yourself from electrical shock.

- Find the room emergency power-off (EPO) switch, disconnecting switch, or electrical outlet. If an electrical accident occurs, you can then operate the switch or unplug the power cord quickly.
- Do not work alone under hazardous conditions or near equipment that has hazardous voltages.
- Disconnect all power before:
  - Performing a mechanical inspection
  - Working near power supplies
  - Removing or installing main units
- Before you start to work on the machine, unplug the power cord. If you cannot unplug it, ask the customer to power-off the wall box that supplies power to the machine, and to lock the wall box in the off position.
- If you need to work on a machine that has *exposed* electrical circuits, observe the following precautions:
  - Ensure that another person, familiar with the power-off controls, is near you.

    Attention: Another person must be there to switch off the power, if necessary.
  - Use only one hand when working with powered-on electrical equipment; keep the other hand in your pocket or behind your back.

    Attention: An electrical shock can occur only when there is a complete circuit. By observing the above rule, you may prevent a current from passing through your body.
  - When using testers, set the controls correctly and use the approved probe leads and accessories for that tester.
  - Stand on suitable rubber mats (obtained locally, if necessary) to insulate you from grounds such as metal floor strips and machine frames.

  Observe the special safety precautions when you work with very high voltages; Instructions for these precautions are in the safety sections of maintenance information. Use extreme care when measuring high voltages.
- Regularly inspect and maintain your electrical hand tools for safe operational condition.
- Do not use worn or broken tools and testers.
- *Never assume* that power has been disconnected from a circuit. First, *check* that it has been powered off.
- Always look carefully for possible hazards in your work area. Examples of these hazards are moist floors, nongrounded power extension cables, power surges, and missing safety grounds.

- Do not touch live electrical circuits with the reflective surface of a plastic dental mirror. The surface is conductive; such touching can cause personal injury and machine damage.
- Do not service the following parts *with the power on* when they are removed from their normal operating places in a machine:
  - Power supply units
  - Pumps
  - Blowers and fans
  - Motor generators

  and similar units. (This practice ensures correct grounding of the units.)
- If an electrical accident occurs:
  - Use caution; do not become a victim yourself.
  - Switch off power.
  - Send another person to get medical aid.

Safety inspection guide

The purpose of this inspection guide is to assist you in identifying potentially unsafe conditions. As each machine was designed and built, required safety items were installed to protect users and service personnel from injury. This guide addresses only those items. You should use good judgment to identify potential safety hazards due to attachment of non-ThinkPad features or options not covered by this inspection guide.

If any unsafe conditions are present, you must determine how serious the apparent hazard could be and whether you can continue without first correcting the problem.

Consider these conditions and the safety hazards they present:

- Electrical hazards, especially primary power (primary voltage on the frame can cause serious or fatal electrical shock)
- Explosive hazards, such as a damaged CRT face or a bulging capacitor
- Mechanical hazards, such as loose or missing hardware

To determine whether there are any potentially unsafe conditions, use the following checklist at the beginning of every service task. Begin the checks with the power off, and the power cord disconnected.

Checklist:

1. Check exterior covers for damage (loose, broken, or sharp edges).
2. Power off the computer. Disconnect the power cord.
3. Check the power cord for:
   a. A third-wire ground connector in good condition. Use a meter to measure third-wire ground continuity for 0.1 ohm or less between the external ground pin and the frame ground.
   b. The power cord should be the type specified in the parts list.
   c. Insulation must not be frayed or worn.
4. Check for cracked or bulging batteries.
5. Remove the cover.
6. Check for any obvious non-ThinkPad alterations. Use good judgment as to the safety of any non-ThinkPad alterations.
7. Check inside the unit for any obvious unsafe conditions, such as metal filings, contamination, water or other liquids, or signs of fire or smoke damage.
8. Check for worn, frayed, or pinched cables.
9. Check that the power-supply cover fasteners (screws or rivets) have not been removed or tampered with.

Handling devices that are sensitive to electrostatic discharge

Any computer part containing transistors or integrated circuits (ICs) should be considered sensitive to electrostatic discharge (ESD.) ESD damage can occur when there is a difference in charge between objects. Protect against ESD damage by equalizing the charge so that the machine, the part, the work mat, and the person handling the part are all at the same charge.

Notes:

1. Use product-specific ESD procedures when they exceed the requirements noted here.
2. Make sure that the ESD protective devices you use have been certified (ISO 9000) as fully effective.

When handling ESD-sensitive parts:

- Keep the parts in protective packages until they are inserted into the product.
- Avoid contact with other people.
- Wear a grounded wrist strap against your skin to eliminate static on your body.
- Prevent the part from touching your clothing. Most clothing is insulative and retains a charge even when you are wearing a wrist strap.
- Use the black side of a grounded work mat to provide a static-free work surface. The mat is especially useful when handling ESD-sensitive devices.
- Select a grounding system, such as those listed below, to provide protection that meets the specific service requirement.

Note:
The use of a grounding system to guard against ESD damage is desirable but not necessary.

  - Attach the ESD ground clip to any frame ground, ground braid, or green-wire ground.
  - When working on a double-insulated or battery-operated system, use an ESD common ground or reference point. You can use coax or connector-outside shells on these systems.
  - Use the round ground prong of the ac plug on ac-operated computers.

Grounding requirements

Electrical grounding of the computer is required for operator safety and correct system function. Proper grounding of the electrical outlet can be verified by a certified electrician.

Safety notices: multilingual translations

The safety notices in this section are provided in English, French, German, Hebrew, Italian, Japanese, and Spanish.

Safety notice 1

Before the computer is powered on after FRU replacement, make sure all screws, springs, and other small parts are in place and are not left loose inside the computer. Verify this by shaking the computer and listening for rattling sounds. Metallic parts or metal flakes can cause electrical shorts.

Avant de remettre l'ordinateur sous tension après remplacement d'une unité en clientèle, vérifiez que tous les ressorts, vis et autres pièces sont bien en place et bien fixées. Pour ce faire, secouez l'unité et assurez-vous qu'aucun bruit suspect ne se produit. Des pièces métalliques ou des copeaux de métal pourraient causer un court-circuit.

Bevor nach einem FRU-Austausch der Computer wieder angeschlossen wird, muß sichergestellt werden, daß keine Schrauben, Federn oder andere Kleinteile fehlen oder im Gehäuse vergessen wurden. Der Computer muß geschüttelt und auf Klappergeräusche geprüft werden. Metallteile oder-splitter können Kurzschlüsse erzeugen.

לפני הפעלת המחשב לאחר החלפת FRU יש לוודא
שכל הברגים, הקפיצים, וחלקים קטנים אחרים נמצאים
במקומם ואינם חופשיים לזוז בתוך המחשב. כדי לוודא
זאת, יש לטלטל את המחשב ולהקשיב לגילוי קולות שקשוק.
חלקי או שבבי מתכת עלולים לגרום לקצרים חשמליים.

Prima di accendere l'elaboratore dopo che é stata effettuata la sostituzione di una FRU, accertarsi che tutte le viti, le molle e tutte le altri parti di piccole dimensioni siano nella corretta posizione e non siano sparse all'interno dell'elaboratore. Verificare ciò scuotendo l'elaboratore e prestando attenzione ad eventuali rumori; eventuali parti o pezzetti metallici possono provocare cortocircuiti pericolosi.

FRU の交換後、 ThinkPad の電源を入れる前に、ねじ、バネ、その他の小さな部品がすべて正しい位置にあり、また ThinkPad の内部で緩んでいないことを確認してください。
これを確認するには、 ThinkPad を振って、カチャカチャと音がしないか確かめます。金属部品や金属破片はショートの原因になることがあります。

Antes de encender el sistema despues de sustituir una FRU, compruebe que todos los tornillos, muelles y demás piezas pequeñas se encuentran en su sitio y no se encuentran sueltas dentro del sistema. Compruébelo agitando el sistema y escuchando los posibles ruidos que provocarían. Las piezas metálicas pueden causar cortocircuitos eléctricos.

Safety notice 2

⚠ DANGER

Some standby batteries contain a small amount of nickel and cadmium. Do not disassemble a standby battery, recharge it, throw it into fire or water, or short-circuit it. Dispose of the battery as required by local ordinances or regulations. Use only the battery in the appropriate parts listing. Use of an incorrect battery can result in ignition or explosion of the battery.

Certaines batteries de secours contiennent du nickel et du cadmium. Ne les démontez pas, ne les rechargez pas, ne les exposez ni au feu ni à l'eau. Ne les mettez pas en court-circuit. Pour les mettre au rebut, conformez-vous à la réglementation en vigueur. Lorsque vous remplacez la pile de sauvegarde ou celle de l'horloge temps réel, veillez à n'utiliser que les modèles cités dans la liste de pièces détachées adéquate. Une batterie ou une pile inappropriée risque de prendre feu ou d'exploser.

Die Bereitschaftsbatterie, die sich unter dem Diskettenlaufwerk befindet, kann geringe Mengen Nickel und Cadmium enthalten. Sie darf nur durch die Verkaufsstelle oder den IBM Kundendienst ausgetauscht werden. Sie darf nicht zerlegt, wiederaufgeladen, kurzgeschlossen, oder Feuer oder Wasser ausgesetzt werden. Die Batterie kann schwere Verbrennungen oder Verätzungen verursachen. Bei der Entsorgung die örtlichen Bestimmungen für Sondermüll beachten. Beim Ersetzen der Bereitschafts-oder Systembatterie nur Batterien des Typs verwenden, der in der Ersatzteilliste aufgeführt ist. Der Einsatz falscher Batterien kann zu Entzündung oder Explosion führen.

**סוללות המתנה מסוימות מכילות כמות קטנה
של ניקל וקדמיום. אין לפרק סוללת המתנה,
לטעון אותה מחדש, להשליך אותה לאש או
למים או לקצר אותה. יש לסלק את הסוללה
כנדרש על ידי התקנות והחוקים המקומיים. יש
להשתמש רק בסוללה המופיעה ברשימת החלקים
המתאימה. שימוש בסוללה לא מתאימה עלול
לגרום להצתה או התפוצצות של הסוללה.**

Alcune batterie di riserva contengono una piccola quantità di nichel e cadmio. Non smontarle, ricaricarle, gettarle nel fuoco o nell'acqua né cortocircuitarle. Smaltirle secondo la normativa in vigore (DPR 915/82, successive disposizioni e disposizioni locali). Quando si sostituisce la batteria dell'RTC (real time clock) o la batteria di supporto, utilizzare soltanto i tipi inseriti nell'appropriato Catalogo parti. L'impiego di una batteria non adatta potrebbe determinare l'incendio o l'esplosione della batteria stessa.

予備バッテリーの中には少量のニッケルとカドミウムが含まれているものがあります。したがって、予備バッテリーの分解、再充電、火または水の中への投棄、またはショートさせることは決して行わないでください。バッテリーを廃棄する場合は地方自治体の条例に従ってください。適切なパーツ・リストにあるバッテリーだけを使用してください。誤ったバッテリーを使用すると、バッテリーが発火したり、爆発したりすることがあります。

Algunas baterías de reserva contienen una pequeña cantidad de níquel y cadmio. No las desmonte, ni recargue, ni las eche al fuego o al agua ni las cortocircuite. Deséchelas tal como dispone la normativa local. Utilice sólo baterías que se encuentren en la lista de piezas. La utilización de una batería no apropiada puede provocar la ignición o explosión de la misma.

Safety notice 3

⚠ DANGER

The battery pack contains small amounts of nickel. Do not disassemble it, throw it into fire or water, or short-circuit it. Dispose of the battery pack as required by local ordinances or regulations. Use only the battery in the appropriate parts listing when replacing the battery pack. Use of an incorrect battery can result in ignition or explosion of the battery.

La batterie contient du nickel. Ne la démontez pas, ne l'exposez ni au feu ni à l'eau. Ne la mettez pas en court-circuit. Pour la mettre au rebut, conformez-vous à la réglementation en vigueur. Lorsque vous remplacez la batterie, veillez à n'utiliser que les modèles cités dans la liste de pièces détachées adéquate. En effet, une batterie inappropriée risque de prendre feu ou d'exploser.

Akkus enthalten geringe Mengen von Nickel. Sie dürfen nicht zerlegt, wiederaufgeladen, kurzgeschlossen, oder Feuer oder Wasser ausgesetzt werden. Bei der Entsorgung die örtlichen Bestimmungen für Sondermüll beachten. Beim Ersetzen der Batterie nur Batterien des Typs verwenden, der in der Ersatzteilliste aufgeführt ist. Der Einsatz falscher Batterien kann zu Entzündung oder Explosion führen.

**מארז הסוללה מכיל כמות קטנה של ניקל
וקדמיום. אין לפרק את מארז הסוללה, להשליך
אותו לאש או למים או לקצר אותו. יש לסלק את
מארז הסוללה הסוללה כנדרש על ידי התקנות
והחוקים המקומיים. יש להשתמש רק בסוללה
המופיעה ברשימת החלקים המתאימה בזמן החלפת
מארז הסוללה. שימוש בסוללה לא מתאימה עלול
לגרום להצתה או התפוצצות של הסוללה.**

La batteria contiene piccole quantità di nichel. Non smontarla, gettarla nel fuoco o nell'acqua né cortocircuitarla. Smaltirla secondo la normativa in vigore (DPR 915/82, successive disposizioni e disposizioni locali). Quando si sostituisce la batteria, utilizzare soltanto i tipi inseriti nell'appropriato Catalogo parti. L'impiego di una batteria non adatta potrebbe determinare l'incendio o l'esplosione della batteria stessa.

バッテリー・パックには少量のニッケルが含まれています。バッテリー・パックを分解したり、火または水の中に投げ込んだり、ショートさせないでください。バッテリー・パックの廃棄にあたっては、地方自治体の条例または規則に従ってください。バッテリー・パックを交換するときは、適切なパーツ・リストにあるバッテリーだけを使用してください。誤ったバッテリーを使用すると、バッテリーが発火したり、爆発したりすることがあります。

Las baterías contienen pequeñas cantidades de níquel. No las desmonte, ni recargue, ni las eche al fuego o al agua ni las cortocircuite. Deséchelas tal como dispone la normativa local. Utilice sólo baterías que se encuentren en la lista de piezas al sustituir la batería. La utilización de una batería no apropiada puede provocar la ignición o explosión de la misma.

Safety notice 4

⚠ DANGER

The lithium battery can cause a fire, an explosion, or a severe burn. Do not recharge it, remove its polarized connector, disassemble it, heat it above 100°C (212°F), incinerate it, or expose its cell contents to water. Dispose of the battery as required by local ordinances or regulations. Use only the battery in the appropriate parts listing. Use of an incorrect battery can result in ignition or explosion of the battery.

La pile de sauvegarde contient du lithium. Elle présente des risques d'incendie, d'explosion ou de brûlures graves. Ne la rechargez pas, ne retirez pas son connecteur polarisé et ne la démontez pas. Ne l'exposez pas à une temperature supérieure à 100°C, ne la faites pas brûler et n'en exposez pas le contenu à l'eau. Mettez la pile au rebut conformément à la réglementation en vigueur. Une pile inappropriée risque de prendre feu ou d'exploser.

Die Systembatterie ist eine Lithiumbatterie. Sie kann sich entzünden, explodieren oder schwere Verbrennungen hervorrufen. Batterien dieses Typs dürfen nicht aufgeladen, zerlegt, über 100 C erhitzt oder verbrannt werden. Auch darf ihr Inhalt nicht mit Wasser in Verbindung gebracht oder der zur richtigen Polung angebrachte Verbindungsstecker entfernt werden. Bei der Entsorgung die örtlichen Bestimmungen für Sondermüll beachten. Beim Ersetzen der Batterie nur Batterien des Typs verwenden, der in der Ersatzteilliste aufgeführt ist. Der Einsatz falscher Batterien kann zu Entzündung oder Explosion führen.

סוללת הליתיום עלולה לגרום לשריפה, להתפוצצות או לכוויות קשות. אין לטעון אותה מחדש, לסלק את המחבר המקוטב שלה, לפרק אותה או לחמם אותה לטמפרטורה העולה על 100 מעלות צלזיוס. אין לשרוף את הסוללה ואין לחשוף את תוכן התא למים. יש לסלק את הסוללה כנדרש בתקנות ובחוקים המקומיים. יש להשתמש רק בסוללה המופיעה ברשימת החלקים המתאימים. שימוש בסוללה אחרת עלול לגרום לסכנת שריפה או התפוצצות.

La batteria di supporto e una batteria al litio e puo incendiarsi, esplodere o procurare gravi ustioni. Evitare di ricaricarla, smontarne il connettore polarizzato, smontarla, riscaldarla ad una temperatura superiore ai 100 gradi centigradi, incendiarla o gettarla in acqua. Smaltirla secondo la normativa in vigore (DPR 915/82, successive disposizioni e disposizioni locali). L'impiego di una batteria non adatta potrebbe determinare l'incendio o l'esplosione della batteria stessa.

リチウム・バッテリーは、火災、爆発、または重症のやけどを引き起こすことがあります。バックアップ・バッテリーの充電、その極性コネクターの取り外し、バッテリー本体の分解、
100 ℃ (212 ˚F) 以上への加熱、焼却、電池の中身を水に浸すことはしないでください。バッテリーを廃棄する場合は地方自治体の条例に従ってください。適切なパーツ・リストにあるバッテリーだけを使用してください。誤ったバッテリーを使用すると、バッテリーが発火したり、爆発したりすることがあります。

La batería de repuesto es una batería de litio y puede provocar incendios, explosiones o quemaduras graves. No la recargue, ni quite el conector polarizado, ni la desmonte, ni caliente por encima de los 100°C (212°F), ni la incinere ni exponga el contenido de sus celdas al agua. Deséchela tal como dispone la normativa local.

Safety notice 5

If the LCD breaks and the fluid from inside the LCD gets into your eyes or on your hands, immediately wash the affected areas with water for at least 15 minutes. Seek medical care if any symptoms from the fluid are present after washing.

Si le panneau d'affichage à cristaux liquides se brise et que vous recevez dans les yeux ou sur les mains une partie du fluide, rincez-les abondamment pendant au moins quinze minutes. Consultez un médecin si des symptômes persistent après le lavage.

Die Leuchtstoffröhre im LCD-Bildschirm enthält Quecksilber. Bei der Entsorgung die örtlichen Bestimmungen für Sondermüll beachten. Der LCD-Bildschirm besteht aus Glas und kann zerbrechen, wenn er unsachgemäß behandelt wird oder der Computer auf den Boden fällt. Wenn der Bildschirm beschädigt ist und die darin befindliche Flüssigkeit in Kontakt mit Haut und Augen gerät, sollten die betroffenen Stellen mindestens 15 Minuten mit Wasser abgespült und bei Beschwerden anschließend ein Arzt aufgesucht werden.

אם מסך הגביש הנוזלי (LCD) נשבר והנוזל מתוך המסך בא במגע
עם עיניכם או ידיכם, שטפו את האזורים הנגועים מיד במים במשך
15 דקות לפחות. פנו לקבלת עזרה רפואית אם תסמינים הנובעים
מהמגע עם הנוזל נמשכים לאחר השטיפה.

Nel caso che caso l'LCD si dovesse rompere ed il liquido in esso contenuto entrasse in contatto con gli occhi o le mani, lavare immediatamente le parti interessate con acqua corrente per almeno 15 minuti; poi consultare un medico se i sintomi dovessero permanere.

LCD が破損し、 LCD の中の液体が目に入ったり、手に触れたりした場合は、液体が触れた部分を少なくとも 15 分間洗い流してください。洗い流した後に、液体によって何らかの症状が現れた場合は、医師の治療を受けてください。

Si la LCD se rompe y el fluido de su interior entra en contacto con sus ojos o sus manos, lave inmediatamente las áreas afectadas con agua durante 15 minutos como mínimo. Obtenga atención medica si se presenta algún síntoma del fluido despues de lavarse.

Safety notice 6

⚠ DANGER

To avoid shock, do not remove the plastic cover that protects the lower part of the inverter card.

Afin d'éviter tout risque de choc électrique, ne retirez pas le cache en plastique protégeant la partie inférieure de la carte d'alimentation.

Aus Sicherheitsgründen die Kunststoffabdeckung, die den unteren Teil der Spannungswandlerplatine umgibt, nicht entfernen.

כדי למנוע התחשמלות, אין להסיר את מכסה הפלסטיק המגן על חלקו התחתון של הכרטיס ההפוך.

Per evitare scosse elettriche, non rimuovere la copertura in plastica che avvolge la parte inferiore della scheda invertitore.

感電を防ぐため、インバーター・カードの下部を保護しているプラスチック・カバーを外さないでください。

Para evitar descargas, no quite la cubierta de plástico que rodea la parte baja de la tarjeta invertida.

Safety notice 7

⚠ DANGER

Though the main batteries have low voltage, a shorted or grounded battery can produce enough current to burn personnel or combustible materials.

Bien que le voltage des batteries principales soit peu élevé, le court-circuit ou la mise à la masse d'une batterie peut produire suffisamment de courant pour brûler des matériaux combustibles ou causer des brûlures corporelles graves.

Obwohl Hauptbatterien eine niedrige Spannung haben, können sie doch bei Kurzschluß oder Erdung genug Strom abgeben, um brennbare Materialien zu entzünden oder Verletzungen bei Personen hervorzurufen.

אף שהסוללות הראשיות הן בעלות מתח נמוך, סוללה מקוצרת או מוארקת עלולה להפיק זרם מספיק לגרימת כוויות או להצתת חומרים דליקים.

Sebbene le batterie di alimentazione siano a basso voltaggio, una batteria in corto circuito o a massa può fornire corrente sufficiente da bruciare materiali combustibili o provocare ustioni ai tecnici di manutenzione.

メイン・バッテリーの電圧は低くても、ショートしたり、接地したバッテリーが、作業者にやけどを負わせたり、可燃物を燃やすだけの電流を発生させる場合があります。

Aunque las baterías principales tienen un voltaje bajo, una batería cortocircuitada o con contacto a tierra puede producir la corriente suficiente como para quemar material combustible o provocar quemaduras en el personal.

Safety notice 8

⚠ DANGER

Before removing any FRU, power off the computer, unplug all power cords from electrical outlets, remove the battery pack, and then disconnect any interconnecting cables.

Avant de retirer une unité remplaçable en clientèle, mettez le système hors tension, débranchez tous les cordons d'alimentation des socles de prise de courant, retirez la batterie et déconnectez tous les cordons d'interface.

Die Stromzufuhr muß abgeschaltet, alle Stromkabel aus der Steckdose gezogen, der Akku entfernt und alle Verbindungskabel abgenommen sein, bevor eine FRU entfernt wird.

לפני סילוק FRU כלשהו, יש לכבות את המחשב,
לנתק את כל כבלי החשמל משקעי החשמל, להוציא
את מארז הסוללה, ואז לנתק כבלי חיבור אחרים
אם יש כאלה.

Prima di rimuovere qualsiasi FRU, spegnere il sistema, scollegare dalle prese elettriche tutti i cavi di alimentazione, rimuovere la batteria e poi scollegare i cavi di interconnessione.

FRU を取り外す前に、 ThinkPad の電源を切って、すべての電源コードをコンセントから外してください。次に、バッテリー・パックを外し、相互接続ケーブルを外してください。

Antes de quitar una FRU, apague el sistema, desenchufe todos los cables de las tomas de corriente eléctrica, quite la batería y, a continuación, desconecte cualquier cable de conexión entre dispositivos.

Laser compliance statement

Some models of ThinkPad computer are equipped from the factory with an optical storage device such as a CD-ROM drive or a DVD-ROM drive. Such devices are also sold separately as options. If one of these drives is installed, it is certified in the U.S. to conform to the requirements of the Department of Health and Human Services 21 Code of Federal Regulations (DHHS 21 CFR) Subchapter J for Class 1 laser products. Elsewhere, the drive is certified to conform to the requirements of the International Electrotechnical Commission (IEC) 825 and CENELEC EN 60 825 for Class 1 laser products.

If a CD-ROM drive, a DVD-ROM drive, or another laser device is installed, note the following:

⚠ **CAUTION:**

Use of controls or adjustments or performance of procedures other than those specified herein might result in hazardous radiation exposure.

O uso de controles, ajustes ou desempenho de procedimentos diferentes daqueles aqui especificados pode resultar em perigosa exposição à radiação.

**凡未在这里指明的任何控制用法、调整、行为，
都会导致严重后果。**

Pour éviter tout risque d'exposition au rayon laser, respectez les consignes de réglage et d'utilisation des commandes, ainsi que les procédures décrites.

Werden Steuer- und Einstellelemente anders als hier festgesetzt verwendet, kann gefährliche Laserstrahlung auftreten.

Az itt előírt eljárásoktól, beállításoktól és vezérlésektől
eltérni a lézersugárzás veszélye miatt kockázatos !

L'utilizzo di controlli, regolazioni o l'esecuzione di procedure diverse da quelle specificate possono provocare l'esposizione a.

Использование элементов настройки и
выполнение процедур иных, чем указано
здесь, может привести к опасному
радиационному облучению.

Použitie kontrôl, úprav alebo iných vykonaní od iných
výrobcov, ako je v tomto špecifikované, mohlo by mať
za následok nebezpečenstvo vystavenia sa vyžiarovaniu.

本書で指定された内容以外の、お客様による整備、調整、または手順を行った場合、レーザー光の放射の危険があります。

El uso de controles o ajustes o la ejecución de procedimientos distintos de los aquí especificados puede provocar la exposición a radiaciones peligrosas.

Opening the CD-ROM drive, the DVD-ROM drive, or any other optical storage device could result in exposure to hazardous laser radiation. There are no serviceable parts inside those drives. **Do not open.**

A CD-ROM drive, a DVD-ROM drive, or any other storage device installed may contain an embedded Class 3A or Class 3B laser diode. Note the following:

⚠ DANGER

Emits visible and invisible laser radiation when open. Do not stare into the beam, do not view directly with optical instruments, and avoid direct exposure to the beam.

Radiação por raio laser ao abrir. Não olhe fixo no feixe de luz, não olhe diretamente por meio de instrumentos óticos e evite exposição direta com o feixe de luz.

开启时会有激光发射时，请勿盯视激光光束，请勿直接查看
视觉仪器，并且避免直接接触在激光光束之中。

Rayonnement laser si carter ouvert. Évitez de fixer le faisceau, de le regarder directement avec des instruments optiques, ou de vous exposer au rayon.

Laserstrahlung bei geöffnetem Gerät. Nicht direkt oder über optische Instrumente in den Laserstrahl sehen und den Strahlungsbereich meiden.

Kinyitáskor lézersugár ! Ne nézzen bele se szabad szemmel, se optikai eszközökkel. Kerülje a sugárnyalábbal való érintkezést !.

Aprendo l'unità vengono emesse radiazioni laser. Non fissare il fascio, non guardarlo direttamente con strumenti ottici e evitare l'esposizione diretta al fascio.

Открывая, берегитесь лазерного излучения.
Не смотрите на луч, не разглядывайте его
с помощью оптических инструментов, а также
избегайте прямого воздействия лазерного луча.

Keď je laserová jednotka otvorená. Vyhnite sa priamemu
pohľadu a nehľadte priamo s optickými nástrojmi do ľúča
a vyhnite sa priamemu vystaveniu ľúčov.

開けるとレーザー光が放射されます。光線を見つめたり、光学機械を使って直接見たりしないでください。

Radiación láser al abrir. No mire fijamente ni examine con instrumental óptico el haz de luz. Evite la exposición directa al haz.

Important service information

This chapter presents following important service information:

- "Strategy for replacing FRUs"
  - "Strategy for replacing a hard disk drive" on page 18
  - "Important notice for replacing a system board" on page 18
  - "How to use error message" on page 18
- "Strategy for replacing FRUs for CTO, CMV, and GAV" on page 19
  - "Product definition" on page 19
  - "FRU identification for CTO, CMV, and GAV products" on page 19
- "Important information about replacing RoHS compliant FRUs" on page 21

Important:
BIOS and device driver fixes are customer-installable. The BIOS and device drivers are posted on the customer support site `http://www.lenovo.com/support`

System Disassembly/Reassembly videos that show the FRU removals or replacements for the Lenovo® authorized service technicians are available in the following support site: `http://www.lenovoservicetraining.com/ion/`

Advise customers to contact the Customer Support Center at 800-426-7378 if they need assistance in obtaining or installing any software fixes, drivers, and BIOS downloads.

Customers in Canada should call the Customer Support Center at 800-565-3344 for assistance or download information.

Strategy for replacing FRUs

Before replacing parts:
Make sure that all software fixes, drivers, and BIOS downloads are installed before replacing any FRUs listed in this manual.

After a system board is replaced, ensure that the latest BIOS is loaded to the system board before completing the service action.

To download software fixes, drivers, and BIOS, do as follows:

1. Go to `http://www.lenovo.com/support`
2. Enter the product number of the computer or press Auto-detect button on the screen.
3. Select **Downloads and drivers**.
4. Follow the directions on the screen and install the necessary software.

Use the following strategy to prevent unnecessary expense for replacing and servicing FRUs:

© Copyright Lenovo 2008

- **If you are instructed to replace a FRU but the replacement does not correct the problem, reinstall the original FRU before you continue**.
- Some computers have both a processor board and a system board. If you are instructed to replace either the processor board or the system board, and replacing one of them does not correct the problem, reinstall that board, and then replace the other one.
- If an adapter or a device consists of more than one FRU, any of the FRUs may be the cause of the error. Before replacing the adapter or device, remove the FRUs, one by one, to see if the symptoms change. Replace only the FRU that changed the symptoms.

Attention: The setup configuration on the computer you are servicing may have been customized. Running Automatic Configuration may alter the settings. Note the current configuration settings (using the View Configuration option); then, when service has been completed, verify that those settings remain in effect.

Strategy for replacing a hard disk drive

Always try to run a low-level format before replacing a hard disk drive. This will cause all customer data on the hard disk to be lost. Be sure that the customer has a current backup of the data before doing this task.

Attention: The drive startup sequence in the computer you are servicing may have been changed. Be extremely careful during write operations such as copying, saving, or formatting. If you select an incorrect drive, data or programs can be overwritten.

Important notice for replacing a system board

Some components mounted on a system board are very sensitive. Improper handling of a system board can cause damage to those components, and may cause a system malfunction.

Attention: When handling a system board:

- Do not drop a system board or apply any excessive force to it.
- Avoid rough handling of any kind.
- Avoid bending a system board and hard pushing to prevent cracking at each BGA (Ball Grid Array) chipset.

How to use error message

Use the error codes displayed on the screen to diagnose failures. If more than one error code is displayed, begin the diagnosis with the first error code. Whatever causes the first error code may also cause false error codes. If no error code is displayed, see whether the error symptom is listed in the Symptom-to-FRU Index for the computer you are servicing.

Strategy for replacing FRUs for CTO, CMV, and GAV

Product definition

Dynamic Configure To Order (CTO)

This provides the ability for a customer to configure an IBM® or a Lenovo solution from an eSite, and have this configuration sent to fulfillment, where it is built and shipped directly to the customer. The machine label, Product Entitlement Warehouse (PEW), eSupport, and the HMM will load these products as the 4-digit MT and 3-digit model, where model = “CTO” (Example: 1829-CTO).

Custom Model Variant (CMV)

This is a unique configuration that has been negotiated between IBM or Lenovo and the customer. A unique 4-digit MT and 3-digit model is provided to the customer to place orders (Example: 1829-W15). A CMV is a special bid offering. Therefore, it is NOT generally announced.

- The MTM portion of the machine label is the 4-digit MT and 3-digit model, where model = “CTO” (Example: 1829-CTO). The PRODUCT ID portion of the machine label is the 4-digit MT and 3-digit CMV model (Example: 1829-W15).
- The PEW record is the 4-digit MT and 3-digit model, where model = “CTO” (Example: 1829-CTO).
- eSupport will show both the CTO and CMV machine type models (Example: 1829-CTO and 1829-W15 will be found on the eSupport site.)
- The HMM will have the 4-digit MT and 3-digit CTO model only (Example: 1829-CTO). Again, CMVs are custom models and are not found in the HMM.

General Announce Variant (GAV)

This is a standard model (fixed configuration). GAVs are announced and offered to all customers. The MTM portion of the machine label is a 4-digit MT and 3-digit model, where model = a “fixed part number”, not “CTO” (Example: 1829-F1U). Also, PEW, eSupport, and the HMM will list these products under the same fixed model number.

FRU identification for CTO, CMV, and GAV products

There are three information resources to identify which FRUs are used to support CTO, CMV, and GAV products. These sources are PEW, eSupport, and the HMM.

Using PEW

- **PEW** is the primary source for identifying FRU part numbers and FRU descriptions for the key commodities for CTO, CMV and GAV products at a MT - serial number level. An example of key commodities are hard disk drives, system boards, microprocessors, Liquid Crystal Displays (LCDs), and memory.
- Remember, all CTO and CMV products are loaded in PEW under the 4-digit MT and 3-digit model, where model = “CTO” (Example: 1829-CTO). GAVs are loaded in PEW under the 4-digit MT and 3-digit model, where model = a “fixed part number”, not “CTO” (Example: 1829-F1U).
- PEW can be accessed at the following Web site: `http://w3-01.ibm.com/pc/entitle/pg2/Service.wss/display/Home`

  Customers can also access PEW via `http://www-307.ibm.com/pc/support/site.wss/product.do?template=/warranty/`

`warranty.vm&sitestyle=lenovo`
Select Warranty lookup. Input the MT and the Serial number and the list of key commodities will be returned in the PEW record under COMPONENT INFORMATION.

- **Business Partners** using Eclaim will access PEW when performing Entitlement Lookup. Business Partners will enter Loc ID, MT and Serial, and the key commodities will be returned in the Eclaim record under SYSTEM DETAILS.
- Authorized IBM Business Partners can access Eclaim at the following Web site: `https://wca.eclaim.com`

Using eSupport

For Key Commodities (Examples - hard disk drive, system board, microprocessor, LCD, and memory)

- eSupport can be used to view the list of key commodities built in a particular machine serial (this is the same record found in PEW).
- eSupport can be accessed at the following Web site: `http://www.lenovo.com/support`
- To view the key commodities, click on PARTS INFORMATION, then PARTS LOOKUP. Type in the model type and serial number. The key commodities will be returned in the eSupport record under PARTS SHIPPED WITH YOUR SYSTEM.

For the Remaining FRUs (the complete list of FRUs at the MT Model level)

- eSupport can be used to view the complete list of FRUs for a machine type and model.
- To view the complete list of FRUs, type in the machine type and model (Example: 1829-CTO) under QUICK PATH. Under “View by Document Type” select PARTS INFORMATION. Under “Filter by Category” select SERVICE PARTS. Under “Parts Information by Date” select SYSTEM SERVICE PARTS. The list of service parts by description, with applicable machine type model and FRU will be displayed.

Using the HMM

For Key Commodities (Examples - hard disk drive, system board, microprocessor, LCD, and memory)

Use the HMM as a back-up to PEW and eSupport to view the complete list of FRUs at the MT Model level.

Important information about replacing RoHS compliant FRUs

RoHS, The Restriction of Hazardous Substances in Electrical and Electronic Equipment Directive (2002/95/EC) is a European Union legal requirement affecting the global electronics industry. RoHS requirements must be implemented on Lenovo products placed on the market after June 2006. Products on the market before June 2006 are not required to have RoHS compliant parts. If the original FRU parts are non compliant, replacement parts can also be non compliant. In all cases if the original FRU parts are RoHS compliant, the replacement part must also be RoHS compliant.

Note: RoHS and non-RoHS FRU part numbers with the same fit and function are identified with unique FRU part numbers.

Lenovo plans to transition to RoHS compliance well before the implementation date and expects its suppliers to be ready to support Lenovo's requirements and schedule in the EU. Products sold in 2005 and 2006, will contain some RoHS compliant FRUs. The following statement pertains to these products and any product Lenovo produces containing RoHS compliant FRUs.

RoHS compliant FRUs have unique FRU part numbers. Before or after the RoHS implementation date, failed RoHS compliant parts must always be replaced using RoHS compliant FRUs, so only the FRUs identified as compliant in the system HMM or direct substitutions for those FRUs may be used.

Products marketed before June 2006		**Products marketed after June 2006**	
Current or original part	**Replacement FRU**	**Current or original part**	**Replacement FRU**
Non-RoHS	Can be Non-RoHS	Must be RoHS	Must be RoHS
Non-RoHS	Can be RoHS		
Non-RoHS	Can sub to RoHS		
RoHS	Must be RoHS		

Note: A direct substitution is a part with a different FRU part number that is automatically shipped by the distribution center at the time of the order.

General checkout

This chapter presents following information:

- "What to do first" on page 24
- "Checkout guide" on page 25
  - "Diagnostics using PC-Doctor for DOS" on page 26
  - "PC-Doctor for Windows" on page 28
  - "PC-Doctor for Rescue and Recovery" on page 28
- "Power system checkout" on page 29

The descriptions in this chapter apply to any ThinkPad model that supports the PC-Doctor® for DOS diagnostics program. Some descriptions might not apply to your particular computer.

Before you go to the checkout guide, be sure to read the following important notes.

Important notes:

- **Only certified trained personnel should service the computer.**
- **Before replacing any FRU, read the entire page on removing and replacing FRUs.**
- **When you replace FRUs, use new nylon-coated screws.**
- **Be extremely careful during such write operations as copying, saving, or formatting.** Drives in the computer that you are servicing sequence might have been altered. If you select an incorrect drive, data or programs might be overwritten.
- **Replace a FRU only with another FRU of the correct model.** When you replace a FRU, make sure that the model of the machine and the FRU part number are correct by referring to the FRU parts list.
- **A FRU should not be replaced because of a single, unreproducible failure.** Single failures can occur for a variety of reasons that have nothing to do with a hardware defect, such as cosmic radiation, electrostatic discharge, or software errors. Consider replacing a FRU only when a problem recurs. If you suspect that a FRU is defective, clear the error log and run the test again. If the error does not recur, do not replace the FRU.
- **Be careful not to replace a nondefective FRU.**

© Copyright Lenovo 2008

What to do first

When you do return a FRU, you must include the following information in the parts exchange form or parts return form that you attach to it:

__ 1. Name and phone number of servicer
__ 2. Date of service
__ 3. Date on which the machine failed
__ 4. Date of purchase
__ 5. Failure symptoms, error codes appearing on the display, and beep symptoms
__ 6. Procedure index and page number in which the failing FRU was detected
__ 7. Failing FRU name and part number
__ 8. Machine type, model number, and serial number
__ 9. Customer's name and address

Note for warranty: During the warranty period, the customer may be responsible for repair costs if the computer damage was caused by misuse, accident, modification, unsuitable physical or operating environment, or improper maintenance by the customer.

Following is a list of some common items that are not covered under warranty and some symptoms that might indicate that the system was subjected to stress beyond normal use.

Before checking problems with the computer, determine whether the damage is covered under the warranty by referring to the following list:

The following are not covered under warranty:

- LCD panel cracked from the application of excessive force or from being dropped
- Scratched (cosmetic) parts
- Distortion, deformation, or discoloration of the cosmetic parts
- Plastic parts, latches, pins, or connectors that have been cracked or broken by excessive force
- Damage caused by liquid spilled into the system
- Damage caused by the improper insertion of a PC Card or the installation of an incompatible card
- Improper disc insertion or use of an optical drive
- Diskette drive damage caused by pressure on the diskette drive cover, foreign material in the drive, or the insertion of a diskette with multiple labels
- Damaged or bent diskette eject button
- Fuses blown by attachment of a nonsupported device
- Forgotten computer password (making the computer unusable)
- Sticky keys caused by spilling a liquid onto the keyboard
- Use of an incorrect ac adapter on laptop products

The following symptoms might indicate damage caused by nonwarranted activities:

- Missing parts might be a symptom of unauthorized service or modification.
- If the spindle of a hard disk drive becomes noisy, it may have been subjected to excessive force, or dropped.

Checkout guide

Use the following procedures as a guide in identifying and correcting problems with the ThinkPad computer.

Note: The diagnostic tests are intended to test only ThinkPad products. The use of non-ThinkPad products, prototype cards, or modified options can lead to false indications of errors and invalid system responses.

1. Identify the failing symptoms in as much detail as possible.
2. Verify the symptoms. Try to re-create the failure by running the diagnostic test or by repeating the operation.

Diagnostics using PC-Doctor for DOS

The ThinkPad computer has a test program called PC-Doctor for DOS (hereafter called *PC-Doctor*.) You can detect errors by running the diagnostics test included in PC-Doctor. This section is an overview of the procedure. For details that depend on model-unique functions, refer to "ThinkPad X300" on page 47.

> **Note:**
> PC-Doctor for DOS is available at following Web site: `http://www.lenovo.com/support`
>
> To create the PC-Doctor diagnostic diskette, follow the instruction on the Web site.

For some possible configurations of the computer, PC-Doctor might not run correctly. To avoid this problem, you need to initialize the computer setup by use of the BIOS Setup Utility before you run PC-Doctor.

To enter BIOS Setup Utility, do as follows:

1. Turn on the computer.
2. When the ThinkPad logo comes up, immediately press F1 to enter the BIOS Setup Utility.

Note: If a supervisor password has been set by the customer, BIOS Setup Utility menu appears after the password is entered. You can start the utility by pressing Enter instead of entering the supervisor password; however, you cannot change the parameters that are protected by the supervisor password.

On the BIOS Setup Utility screen, press F9, Enter, F10, and then Enter.

Note: When you initialize the computer configuration, some devices are disabled, such as the serial port. If you test one of these devices, you will need to enable it by using Configuration utility for DOS. The utility is available on the following Web site: `http://www.lenovo.com/support`

Testing the computer

To run the test, do as follows:

Note: In the following procedure, you can select an item not only with the arrow keys, but also with the TrackPoint® pointer. Instead of pressing Enter, click the left button.

1. Insert the PC-Doctor disk into the diskette drive; then power on the computer.

   If the computer cannot be powered on, go to "Power system checkout" on page 29, and check the power sources.

   If an error code appears, go to "Symptom-to-FRU index" on page 39.

   On the first screen, select the model and press Enter. Follow the instructions on the screen.
2. The main panel of PC-Doctor appears.
3. Select **Diagnostics** with the arrow keys, and press Enter.

   A pull-down menu appears. (Its exact form depends on the model.)

Note: PC-Doctor menu does not mean the formal support device list. Some unsupported device names may appear in the PC-Doctor menu.

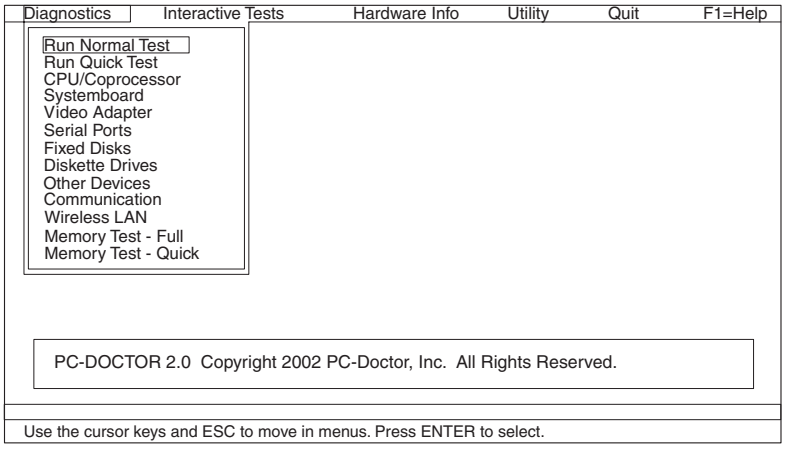

The options on the test menu are as follows:

Diagnostics	**Interactive Tests**
• Run Normal Test • Run Quick Test • CPU/Coprocessor • Systemboard • Video Adapter • Serial Ports • Fixed Disks • Diskette Drives • Other Devices • ThinkPad Devices • Communication • Wireless LAN • Memory Test – Full • Memory Test – Quick	• Keyboard • Video • Internal Speaker • Mouse • Diskette • System Load • CD-ROM/DVD Test • Intel Wireless Radio
Notes: • In the **Keyboard** test in **Interactive Tests**, the Fn key should be held down for at least 2 seconds; otherwise, it cannot be sensed. • **Video Adapter** test supports only the LCD display on the ThinkPad computer. If you have an external monitor attached to your computer, detach it before running PC-Doctor for DOS. • To test **Digital Signature Chip**, the security chip must be set to Active.	

4. Run the applicable function test.
5. Follow the instructions on the screen. If there is a problem, PC-Doctor shows messages describing it.
6. To exit the test, select **Quit — Exit Diag**.

   To cancel the test, press Esc.

Note: After running PC-Doctor, check the time and date on the system and reset them if they are incorrect.

Detecting system information with PC-Doctor

PC-Doctor can detect the following system information:

Hardware Info

- System Configuration
- Memory Contents
- Physical Disk Drives
- Logical Disk Drives
- VGA Information
- IDE Drive Info
- PCI Information
- PNPISA Info
- SMBIOS Info
- VESA LCD Info
- Hardware Events Log

Utility

- Run External Tests
- Surface Scan Hard Disk
- Benchmark System
- DOS Shell
- Tech Support Form
- Battery Rundown
- View Test Log
- Print Log
- Save Log
- Full Erase Hard Drive
- Quick Erase Hard Drive

PC-Doctor for Windows

This product is designed to help you troubleshoot and resolve problems related to your computer. Select one of the categories listed below to display symptoms and solutions:

- Check System Health
- System and Device Tests
- Lenovo Troubleshooting Center
- System Reports
- Updates and Support

PC-Doctor for Rescue and Recovery

In some models of ThinkPad computer, the Rescue and Recovery® workspace enables you to run the PC-Doctor program to test the hardware features of the computer.

To run the test, click “Run Diagnostics” on the Rescue and Recovery main screen.

Power system checkout

To verify a symptom, do the following:
1. Turn off the computer.
2. Remove the battery pack.
3. Connect the ac adapter.
4. Check that power is supplied when you turn on the computer.
5. Turn off the computer.
6. Disconnect the ac adapter and install the charged battery pack.
7. Check that the battery pack supplies power when you turn on the computer.

If you suspect a power problem, see the appropriate one of the following power supply checkouts:
- "Checking the AC adapter"
- "Checking operational charging" on page 30
- "Checking the battery pack" on page 30
- "Checking the backup battery" on page 31

Checking the AC adapter

You are here because the computer fails only when the AC adapter is used.
- If the power problem occurs only when the ThinkPad Essential Port Replicator is used, replace the port replicator.
- If the power-on indicator does not turn on, check the power cord of the AC adapter for correct continuity and installation.
- If the computer does not charge during operation, go to "Checking operational charging" on page 30

To check the AC adapter, do the following:
1. Unplug the AC adapter cable from the computer.
2. Measure the output voltage at the plug of the AC adapter cable. See the following figure:

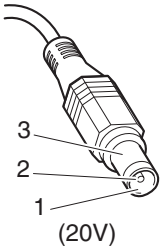

Pin	Voltage (V dc)
1	+20
2	0
3	Ground

Note: Output voltage of pin no.2 of the AC adapter may different from the one you are servicing.
3. If the voltage is not correct, replace the AC adapter.
4. If the voltage is acceptable, do the following:
   - Replace the system board.
   - If the problem persists, go to "ThinkPad X300" on page 47.

Note: Noise from the AC adapter does not always indicate a defect.

Checking operational charging

To check whether the battery charges properly during operation, use a discharged battery pack or a battery pack that has less than 50% of the total power remaining when installed in the computer.

Perform operational charging. If the battery status indicator or icon does not turn on, remove the battery pack and let it return to room temperature. Reinstall the battery pack. If the charge indicator or icon still does not turn on, replace the battery pack.

If the charge indicator still does not turn on, replace the system board. Then reinstall the battery pack. If it is still not charged, go to the next section.

Checking the battery pack

Battery charging does not start until the Power Meter shows that less than 95% of the total power remains; under this condition the battery pack can charge to 100% of its capacity. This protects the battery pack from being overcharged or from having a shortened life.

To check your battery, move your cursor to the Power Meter icon in the icon tray of the Windows® taskbar and wait for a moment (but do not click), and the percentage of battery power remaining is displayed. To get detailed information about the battery, double-click the Power Meter icon.

Note: If the battery pack becomes hot, it may not be able to charge. Remove it from the computer and leave it at room temperature for a while. After it cools down, reinstall and recharge it.

To check the battery pack, do the following:

1. Power off the computer.
2. Remove the battery pack and measure the voltage between battery terminals 1 (+) and 7 (-). See the following figure:

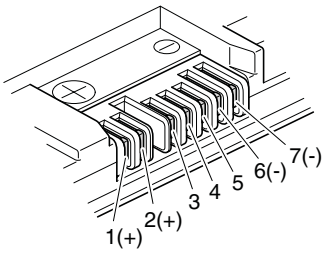

Terminal	Voltage (V dc)
1	+ 0 to + 12.6
7	Ground (-)

3. If the voltage is less than +11.0 V dc, the battery pack has been discharged.

   Note: Recharging will take at least 3 hours, even if the indicator does not turn on.

   If the voltage is still less than +11.0 V dc after recharging, replace the battery.
4. If the voltage is more than +11.0 V dc, measure the resistance between battery terminals 5 and 7. The resistance must be 4 to 30 K Ω.

   If the resistance is not correct, replace the battery pack. If the resistance is correct, replace the system board.

Checking the backup battery

Do the following:

1. Power off the computer, and unplug the ac adapter from it.
2. Turn the computer upside down.
3. Remove the battery pack (see “1010 Battery pack” on page 61).
4. Remove the backup battery (see “1090 Backup battery” on page 78).
5. Measure the voltage of the backup battery. See the following figure.

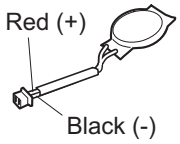

Wire	Voltage (V dc)
Red	+2.5 to +3.2
Black	Ground

- If the voltage is correct, replace the system board.
- If the voltage is not correct, replace the backup battery.
- If the backup battery discharges quickly after replacement, replace the system board.

Related service information

This chapter presents following information:

- "Restoring the factory contents by using Product Recovery discs"
- "Passwords" on page 34
- "Power management" on page 37
- "Symptom-to-FRU index" on page 39

Service Web site:
When the latest maintenance diskette and the system program service diskette become available, they will be posted on `http://www.lenovo.com/spm`

Restoring the factory contents by using Product Recovery discs

When the hard disk drive (HDD) or solid state drive (SSD) is replaced because of a failure, no Product Recovery program is on the new drive. In this case, you must use the recovery discs for the computer. Order the recovery discs and the drive at the same time so that you can recover the new drive with the pre-installed software when they arrive. For information on which discs to order, see "Recovery discs" on page 130.

To install the factory contents by using Product Recovery discs, do the following:

Note: Recovery takes several hours. The length of time depends on the method you use. If you use recovery discs, recovery takes at least five hours.

1. Insert the bootable **Start Recovery Disc** into the DVD drive.
2. Select your language and click **Next**.
3. Read the license. If you agree with the terms, select **I accept these terms and conditions** and then click **Next**.
4. Insert the **Operating System Recovery Disc** when prompted and click **Yes** to begin the operating system recovery process.
5. Insert the **Product Recovery Disc** when prompted and click **OK**.
6. If you have a **Supplemental Recovery Disc**, insert it when prompted and click **Yes**. If you do not have a **Supplemental Recovery Disc**, click **No**.

   Note: Not all recovery disc sets come with a **Supplemental Recovery Disc**. If there is a **Supplemental Recovery Disc**, it will be clearly marked as such.
7. When all of the data has been copied from the last disc in the set, a message is displayed prompting you to restart the computer. Remove the disc and then click **Yes**.

   Note: The remainder of the recovery process is fully automated and no action is required by you. The computer will restart into the Windows desktop several times and you might experience periods when no activity is apparent on the screen for several minutes at a time. This is normal.

© Copyright Lenovo 2008

8. When the recovery process is complete, the Welcome to Microsoft Windows screen is displayed. Follow the instructions on the screen to complete the Windows setup.

Passwords

As many as three passwords may be needed for any ThinkPad computer: the power-on password (POP), the hard-disk password (HDP), and the supervisor password (SVP).

If any of these passwords has been set, a prompt for it appears on the screen whenever the computer is turned on. The computer does not start until the password is entered.

Exception: If only an SVP is installed, the password prompt does not appear when the operating system is booted.

Power-on password

A power-on password (POP) protects the system from being powered on by an unauthorized person. The password must be entered before an operating system can be booted. For how to remove the POP, see "How to remove the power-on password" on page 35.

Hard-disk password

There are two hard-disk passwords (HDPs):

- User HDP—for the user
- Master HDP—for the system administrator, who can use it to get access to the hard disk even if the user has changed the user HDP

Note: There are two modes for the HDP: **User only** and **Master + User**. The **Master + User** mode requires two HDPs; the system administrator enters both in the same operation. The system administrator then provides the user HDP to the system user.

Attention: If the user HDP has been forgotten, check whether a master HDP has been set. If it has, it can be used for access to the hard disk drive. If no master HDP is available, neither Lenovo nor Lenovo authorized servicers provide any services to reset either the user or the master HDP, or to recover data from the hard disk drive. The hard disk drive can be replaced for a scheduled fee.

For how to remove the POP, see "How to remove the hard-disk password" on page 35.

Supervisor password

A supervisor password (SVP) protects the system information stored in the BIOS Setup Utility. The user must enter the SVP in order to get access to the BIOS Setup Utility and change the system configuration.

Attention: If the SVP has been forgotten and cannot be made available to the servicer, there is no service procedure to reset the password. The system board must be replaced for a scheduled fee.

How to remove the power-on password

To remove a POP that you have forgotten, do the following:

(A) If no SVP has been set:

1. Turn off the computer.
2. Remove the battery pack.

   For how to remove the battery pack, see “1010 Battery pack” on page 61.
3. Remove the backup battery.

   For how to remove the backup battery, see “1090 Backup battery” on page 78.
4. Turn on the computer and wait until the POST ends.

   After the POST ends, the password prompt does not appear. The POP has been removed.
5. Reinstall the backup battery and the battery pack.

(B) If an SVP has been set and is known by the servicer:

1. Turn on the computer.
2. When the ThinkPad logo comes up, immediately press F1 to enterBIOS Setup Utility.

   For models supporting the Passphrase function, press F1 while the POP icon is appearing on the screen; then enter the POP. For the other models, enter the POP.

   Note: To check whether the ThinkPad computer supports the Passphrase function, enter the BIOS Setup Utility and go to **Security** --> **Password**. If the **Using Passphrase** item is displayed in the menu, this function is available on the ThinkPad computer.
3. Select **Security**, using the cursor directional keys to move down the menu.
4. Select **Password**.
5. Select **Power-On Password**.
6. Type the current SVP in the **Enter Current Password** field. then leave the **Enter New Password** field blank, and press Enter twice.
7. In the Changes have been saved window, press Enter.
8. Press F10; then, in the Setup confirmation window, select **Yes** .

How to remove the hard-disk password

Attention: If **User only** mode is selected and the user HDP has been forgotten and cannot be made available to the servicer, neither Lenovo nor Lenovo authorized servicers provide any services to reset the user HDPs or to recover data from the hard disk drive. The hard disk drive can be replaced for a scheduled fee.

To remove a user HDP that has been forgotten, when the SVP and the master HDP are known, do the following:

1. Turn on the computer.
2. When the ThinkPad logo comes up, immediately press F1 to enterBIOS Setup Utility.

   For models supporting the Passphrase function, press F1 while HDP icon is appearing on the screen; then enter the master HDP. For the other models, enter the master HDP.

Note: To check whether the ThinkPad computer supports the Passphrase function, enter the BIOS Setup Utility and go to **Security** --> **Password**. If **Using Passphrase** item is displayed in the menu, this function is available on the ThinkPad computer.

3. Select **Security**, using the cursor directional keys to move down the menu.
4. Select **Password**.
5. Select **Hard-disk *x* password**, where *x* is the letter of the hard disk drive. A pop-up window opens.
6. Select **Master HDP**.
7. Type the current master HDP in the **Enter Current Password** field. then leave the **Enter New Password** field blank, and press Enter twice.
8. Press F10.
9. Select **Yes** in the Setup Configuration window.

   Both user HDP and master HDP will have been removed.

Power management

To reduce power consumption, the computer has three power management modes: screen blank, standby, and hibernation.

Screen blank mode

If the time set on the “Turn off monitor” timer in the operating system expires, the LCD backlight turns off.

To put the computer into screen blank mode, press the ThinkVantage® button and use the ThinkVantage Productivity Center.

To end screen blank mode and resume normal operation, press any key.

Standby mode

When the computer enters standby mode, the following events occur in addition to what occurs in screen blank mode:
- The LCD is powered off.
- The hard disk drive is powered off.
- The CPU stops.

To enter standby mode, press Fn+F4.

Note: If you are using the ACPI operating system, you can change the action of Fn+F4.

In certain circumstances, the computer goes into standby mode automatically:
- If a “suspend time” has been set on the timer, and the user does not do any operation with the keyboard, the TrackPoint, the hard disk, the parallel connector, or the diskette drive within that time.
- If the battery indicator blinks orange, indicating that the battery power is low. (Alternatively, if **Hibernate when battery becomes low** has been selected in the “Power Management Properties” window, the computer goes into hibernation mode.)

Note for the APM operating system: Even if you do not set the low-battery alarm, the charge indicator notifies you when the battery is low, and then the computer enters the power-saving mode automatically. This default low-battery behavior is independent of the operating system; so if you have set the low-battery alarm, the computer may not do what you specified. It chooses either your setting or the default setting, whichever is appropriate.

If you are using the ACPI operating system, only the low-battery alarm is available.

To cause the computer to return from standby mode and resume operation, do one of the following:
- Press the Fn key.
- Open the LCD cover.
- Turn on the power switch.

Also, in either of the following events, the computer automatically returns from standby mode and resumes operation:

- The ring indicator (RI) is signaled by a serial device or a PC Card device.
- The time set on the resume timer elapses.

  Note: The computer does not accept any input immediately after it enters standby mode. Wait a few seconds before taking any action to reenter operation mode.

Hibernation mode

In hibernation mode, the following occurs:

- The system status, RAM, VRAM, and setup data are stored on the hard disk.
- The system is powered off.

To cause the computer to enter hibernation mode, do any of the following:

- Press the Fn+F12 keys.
- If you are using the APM operating system and have set the mode to **Power switch mode [Hibernation]**, turn off the power switch.
- If you are using the ACPI operating system and have defined one of the following actions as the event that causes the system to go into hibernation mode, perform that action.
  - Closing the lid.
  - Pressing the power button.
  - Pressing Fn+F4 keys.

Also, the computer goes into hibernation mode automatically in either of the following conditions:

- If a “hibernation time” has been set on the timer, and if the user does not do any operation with the keyboard, the TrackPoint, the hard disk drive, the parallel connector, or the diskette drive within that time.
- If the timer conditions are satisfied in suspend mode.
- If you are using the APM operating system and have set the mode to **Hibernate when battery becomes low**, and the battery charge becomes critically low.

When the power is turned on, the computer returns from hibernation mode and resumes operation. The hibernation file in the boot record on the hard disk drive is read, and system status is restored from the hard disk drive.

Symptom-to-FRU index

This section contains following information:

- "Numeric error codes"
- "Error messages" on page 43
- "Beep symptoms" on page 44
- "No-beep symptoms" on page 44
- "LCD-related symptoms" on page 45
- "Intermittent problems" on page 46
- "Undetermined problems" on page 46

The symptom-to-FRU index in this section lists symptoms and errors and their possible causes. The most likely cause is listed first, in boldface type.

Note: Do the FRU replacement or other actions in the sequence shown in the column headed "FRU or action, in sequence." If replacing a FRU does not solve the problem, put the original part back in the computer. Do not replace a nondefective FRU.

This index can also help you determine, during regular servicing, what FRUs are likely to need to be replaced next.

A numeric error is displayed for each error detected in POST or system operation. In the displays, **n** can be any number.

If no numeric code is displayed, check the narrative descriptions of symptoms. If the symptom is not described there, go to "Intermittent problems" on page 46.

> **Note:**
> For a device not supported by diagnostic codes in the ThinkPad computers, see the manual for that device.

Numeric error codes

Table 1. Numeric error codes

Symptom or error	FRU or action, in sequence
0175 Bad CRC1, stop POST task—The EEPROM checksum is not correct.	**System board.**
0176 System Security—The system has been tampered with.	1. **Run BIOS Setup Utility, and save the current setting by pressing F10.** 2. System board.
0177 Bad SVP data, stop POST task—The checksum of the supervisor password in the EEPROM is not correct.	**System board.**
0182 Bad CRC2. Enter BIOS Setup and load Setup defaults.—The checksum of the CRS2 setting in the EEPROM is not correct.	1. **Run BIOS Setup Utility. Press F9, and Enter to load the default setting. Then save the current setting by pressing F10.** 2. System board.
0185 Bad startup sequence settings. Enter BIOS Setup and load Setup defaults.	1. **Run BIOS Setup Utility. Press F9, and Enter to load the default setting. Then save the current setting by pressing F10.**

Table 1. Numeric error codes (continued)

Symptom or error	FRU or action, in sequence
0187 EAIA data access error—The access to EEPROM is failed.	**System board.**
0188 Invalid RFID Serialization Information Area.	**System board.**
0189 Invalid RFID configuration information area—The EEPROM checksum is not correct.	**System board.**
0190 Critical low-battery error	1. **Charge the battery pack.** 2. Battery pack.
0191 System Security—Invalid Remote Change requested.	1. **Run BIOS Setup Utility, and then save current setting by pressing F10.** 2. System board.
0192 System Security— Embedded Security hardware tamper detected.	**System board.**
0199 System Security— Security password retry count exceeded.	1. **Run BIOS Setup Utility, and then save the current setting by pressing F10.** 2. System board.
01C9 More than one Ethernet devices are found. Remove one of them. Press <Esc> to continue.	1. **Remove the Ethernet device that you installed; or press Esc to ignore the warning message.** 2. System board.
01CA More than one Wireless LAN devices are found. Remove one of them.	1. **Remove the wireless LAN device that you installed**. 2. System board.
0200 Hard disk error—The hard disk is not working.	1. **Reseat the hard disk drive.** 2. Load Setup Defaults in BIOS Setup Utility. 3. Hard disk drive. 4. System board.
021x Keyboard error.	**Run interactive tests of the keyboard and the auxiliary input device.**
0220 Monitor type error—Monitor type does not match the one specified in CMOS.	**Load Setup Defaults in BIOS Setup Utility.**
0230 Shadow RAM error—Shadow RAM fails at offset nnnn.	**System board.**
0231 System RAM error—System RAM fails at offset nnnn.	1. **DIMM.** 2. System board.
0232 Extended RAM error— Extended RAM fails at offset nnnn.	1. **DIMM.** 2. System board.
0250 System battery error—System battery is dead.	1. **Charge the backup battery for more than 8 hours by connecting the ac adapter.** 2. Replace the backup battery and run BIOS Setup Utility to reset the time and date.

Table 1. Numeric error codes (continued)

Symptom or error	FRU or action, in sequence
0251 System CMOS checksum bad— Default configuration used.	1. **Charge the backup battery for more than 8 hours by connecting the ac adapter.** 2. Replace the backup battery and run BIOS Setup Utility to reset the time and date.
0252 Password checksum bad—The password is cleared.	**Reset the password by running BIOS Setup Utility.**
0260 System timer error.	1. **Charge the backup battery for more than 8 hours by connecting the ac adapter.** 2. Replace the backup battery and run BIOS Setup Utility to reset the time and date. 3. System board.
0270 Real-time clock error.	1. **Charge the backup battery for more than 8 hours by connecting the ac adapter.** 2. Replace the backup battery and run BIOS Setup Utility to reset the time and date. 3. System board.
0271 Date and time error—Neither the date nor the time is set in the computer.	**Run BIOS Setup Utility to reset the time and date.**
0280 Previous boot incomplete— Default configuration used.	1. **Load "Setup Default" in BIOS Setup Utility.** 2. DIMM. 3. System board.
02F0 CPU ID:xx Failed.	1. **CPU.** 2. System board.
02F4 EISA CMOS not writable.	1. **Load Setup Defaults in BIOS Setup Utility.** 2. Replace the backup battery. 3. System board.
02F5 DMA test failed.	1. **DIMM.** 2. System board.
02F6 Software NMI failed	1. **DIMM.** 2. System board.
02F7 Fail-safe timer NMI failed	1. **DIMM.** 2. System board.
1802 Unauthorized network card is plugged in—Turn off and remove the miniPCI network card.	1. **Remove Mini PCI network card.** 2. System board.
1803 Unauthorized daughter card is plugged in—Turn off and remove the daughter card.	1. **Remove the daughter card that you installed.** 2. System board.
1804 Unauthorized WAN card is plugged in—Power off and remove the WAN card.	1. **Remove the WAN card that you installed.** 2. System board.

Table 1. Numeric error codes (continued)

Symptom or error	FRU or action, in sequence
1805 Unauthorized Wireless USB card is plugged in—Power off and remove the Wireless USB card.	1. **Remove the Wireless USB card that you installed.** 2. System board.
1820 More than one external fingerprint reader is attached. Power off and remove all but the reader that you set up within your main operating system.	**Remove all but the reader that you set up for the authentication.**
1830 Invalid memory configuration—Power off and install a memory module to Slot-0 or the lower slot.	**Install DIMM in Slot-0, but not in Slot-1.** **Note:** For the construction of the DIMM slot, see "1040 DIMM" on page 65.
2000 Hard Drive Active Protection sensor diagnostics failed.Press <Esc> to continue.Press <F1> to enter SETUP	1. Place the ThinkPad computer on a horizontal surface. Do not apply any physical shock to the computer. 2. Run **Diagnostics** --> **ThinkPad Devices** --> **HDD Active Protection Test**.
2010 Warning: Your internal hard disk drive (HDD) may not function correctly on this system. Ensure that your HDD is supported on this system and that the latest HDD firmware is installed.	Inform the following information to the customer:If in the primary bay the customer is using a non-IBM or non-Lenovo hard disk drive (HDD), or an old generation IBM HDD which is not supported by this system, with the risk in mind, the customer can still use it by pressing ESC. If in the primary drive bay the customer is using a supported IBM/Lenovo HDD with an old firmware, the customer needs to update its firmware to the latest. The latest version is available at `http://www.lenovo.com/support`
2100 Initialization error on HDD0 (Main hard disk drive)	1. **Reseat the hard disk drive.** 2. Main hard disk drive. 3. System board.
2102 Initialization error on HDD1 (Ultrabay hard disk drive)	1. **Reseat the hard disk drive.** 2. Ultrabay™ hard disk drive. 3. System board.
2110 Read error on HDD0 (Main hard disk drive)	1. **Reseat the hard disk drive.** 2. Main hard disk drive. 3. System board.
2112 Read error on HDD1 (Ultrabay hard disk drive)	1. **Reseat the hard disk drive.** 2. Ultrabay hard disk drive. 3. System board.

Error messages

Table 2. Error messages

Symptom or error	FRU or action, in sequence
Device address conflict.	1. **Load "Setup Defaults" in the BIOS Setup Utility**. 2. Backup battery. 3. System board.
Allocation error for device.	1. **Load "Setup Defaults" in the BIOS Setup Utility**. 2. Backup battery. 3. System board.
Failing bits: nnnn.	1. **DIMM**. 2. System board.
Invalid system configuration data.	1. **DIMM**. 2. System board.
I/O device IRQ conflict.	1. **Load "Setup Defaults" in the BIOS Setup Utility**. 2. Backup battery. 3. System board.
Hibernation error.	1. **Restore the system configuration to what it was before the computer entered hibernation mode**. 2. If memory size has been changed, re-create the hibernation file.
Fan error.	1. **Fan**. 2. Thermal grease. 3. System board.
Thermal sensing error.	**System board**.
Cannot boot from any device.	**Check the status of device which you want to boot from.** Device not found. 1. The device you want to boot from. 2. System board. Device Error. 1. The device you want to boot from. 2. System board. No valid operating system. 1. Check that the operating system has no failure and is installed correctly. 2. Reinstall the operation system. Excluded from boot order. • Enter the BIOS Setup Utility and add the device in boot order.

Beep symptoms

Table 3. Beep symptoms

Symptom or error	FRU or action, in sequence
One beep and a blank, unreadable, or flashing LCD.	1. **Reseat the LCD connector**. 2. LCD assembly. 3. External CRT. 4. System board.
One long and two short beeps, and a blank or unreadable LCD.	1. **System board**. 2. LCD assembly. 3. DIMM.
Two short beeps with error codes.	**POST error. See "Numeric error codes" on page 39.**
Two short beeps and a blank screen.	1. **System board**. 2. DIMM.
Three short beeps, pause, three more short beeps, and one short beep.	1. **DIMM**. 2. System board
One short beep, pause, three short beeps, pause, three more short beeps, and one short beep.	
Only the cursor appears.	**Reinstall the operating system**.
Four cycles of four short beeps and a blank screen.	**System board** (security chip)
Five short beeps and a blank screen.	**System board**

No-beep symptoms

Table 4. No-beep symptoms

Symptom or error	FRU or action, in sequence
No beep, power-on indicator on, LCD blank, and no POST.	1. **Make sure that every connector is connected tightly and correctly**. 2. DIMM. 3. System board.
No beep, power-on indicator on, and LCD blank during POST.	1. **Reseat DIMM**. 2. System board.
The power-on password prompt appears.	A power-on password or a supervisor password is set. Type the password and press **Enter**.
The hard-disk password prompt appears.	A hard-disk password is set. Type the password and press **Enter**.

LCD-related symptoms

Important: The TFT LCD for the notebook computer contains many thin-film transistors (TFTs). The presence of a small number of dots that are missing, discolored, or always lighted is characteristic of TFT LCD technology, but excessive pixel problems can cause viewing concerns. The LCD should be replaced if the number of missing, discolored, or lighted dots in any background is as follows:

Table 5. Minimum quantity of defective pixels required for LCD replacement on June 2006 or later manufactured ThinkPad

LCD resolution	Bright dots	Dark dots	Bright and dark dots
XGA, WXGA	5	6	6
WXGA+, SXGA+, WSXGA+	5	8	10
UXGA, WUXGA, QXGA	5	13	13

Notes:

- Lenovo will not provide replacement if the LCD is within specification as we cannot guarantee that any replacement LCD will have zero pixel defects.
- A bright dot means a pixel is always on (white or color.)
- A dark dot means a pixel is always off (black color.)
- One pixel consists of R, G, B sub-pixels.

Table 6. LCD-related symptoms

Symptom or error	FRU or action, in sequence
No beep, power-on indicator on, and a blank LCD during POST.	**System board**.
• LCD backlight not working. • LCD too dark. • LCD brightness cannot be adjusted. • LCD contrast cannot be adjusted.	1. **Reseat the LCD connectors**. 2. LCD assembly. 3. System board.
• LCD screen unreadable. • Characters missing pixels. • Screen abnormal. • Wrong color displayed.	1. **See important note for "LCD-related symptoms."** 2. Reseat all LCD connectors. 3. LCD assembly. 4. System board.
Horizontal or vertical lines displayed on LCD.	**LCD assembly**.

Intermittent problems

Intermittent system hang problems can be due to a variety of causes that have nothing to do with a hardware defect, such as cosmic radiation, electrostatic discharge, or software errors. FRU replacement should be considered only when a problem recurs.

When analyzing an intermittent problem, do the following:

1. Run the diagnostic test for the system board in loop mode **at least 10 times**.
2. If no error is detected, do **not** replace any FRUs.
3. If any error is detected, replace the FRU shown by the FRU code. Rerun the test to verify that no more errors exist.

Undetermined problems

If the diagnostic tests did not identify the adapter or device that has failed, if wrong devices are installed, or if the system simply is not operating, follow these procedures to isolate the failing FRU (do not isolate FRUs that have no defects).

Verify that all attached devices are supported by the computer.

Verify that the power supply being used at the time of the failure is operating correctly. (See "Power system checkout" on page 29.)

1. Turn off the computer.
2. Visually check each FRU for damage. Replace any damaged FRU.
3. Remove or disconnect all of the following devices:
   a. Non-ThinkPad devices
   b. Devices attached to the docking station or the port replicator
   c. Printer, mouse, and other external devices
   d. Battery pack
   e. Hard disk drive
   f. External diskette drive or optical drive
   g. DIMM
   h. Optical disk or diskette in the internal drive
   i. PC Cards
4. Turn on the computer.
5. Determine whether the problem has been solved.
6. If the problem does not recur, reconnect the removed devices one at a time until you find the failing FRU.
7. If the problem remains, replace the following FRUs one at a time (do not replace a nondefective FRU):
   a. System board
   b. LCD assembly

ThinkPad X300

This chapter presents following product-specific service references and product-specific parts information.

- "Specifications"
- "Status indicators" on page 49
- "FRU tests" on page 51
- "Fn key combinations" on page 53
- "FRU replacement notices" on page 55
- "Removing and replacing a FRU" on page 59
- "Locations" on page 115
- "Parts list" on page 117

Specifications

The following table lists the specifications of the ThinkPad X300 :

Table 7. Specifications

Feature	Description
Processor	• Intel® Core™ 2 Duo processor LV7100 (1.2 GHz), 4-MB L2 cache
Bus architecture	• 800-MHz PSB • 667-MHz DDR2 SDRAM (PC2-5300) • PCI bus • PCI Express bus • DMI
Graphic memory chip	• Intel® GS965 graphics
Display	• 13.3-inch, 16M colors, WXGA+ (1440 × 900 resolution) TFT color LCD
Standard memory	• 512-MB DDR2-667 SDRAM SO-DIMM (PC2-5300) card × 1 • 1-GB DDR2-667 SDRAM SO-DIMM (PC2-5300) card × 1 • 2-GB DDR2-667 SDRAM SO-DIMM (PC2-5300) card × 1
Extended memory device (some models)	• Intel Turbo Memory 1-GB Minicard
Optional memory	• 512-MB DDR2-667 SDRAM SO-DIMM (PC2-5300) card × 1 • 1-GB DDR2-667 SDRAM SO-DIMM (PC2-5300) card × 1 • 2-GB DDR2-667 SDRAM SO-DIMM (PC2-5300) card × 1 (maximum of 4.0 GB)
CMOS RAM	• 242 bytes
Solid state drive	• 64 GB, SATA interface
Optical drive	• DVD-RAM/RW drive
Fingerprint reader	Yes
I/O port	• External monitor connector • Stereo headphone jack • Monaural microphone jack • RJ45 connector • Universal serial bus (USB) connector × 3 (compatible with USB 1.1 and 2.0)

© Copyright Lenovo 2008

Table 7. Specifications (continued)

Feature	Description
Audio	• Built-in stereo speakers • Software control volume
Ethernet (on the system board)	• Gigabit Ethernet
PCI Express Mini Card	• Intel Wireless WiFi Link 4965AGN • Sierra Wireless EV-DO Wireless WAN Mini PCI Express Adapter • Sierra Wireless MC8755 PCI Express MiniCard • Wireless USB PCI Express Half-Mini Card
Bluetooth wireless	• ThinkPad *Bluetooth* with Enhanced Data Rate (BDC-2)
Touch pad	• UltraNav®
ThinkLight®	Yes
Battery	• Li-Polymer battery (3 cells) 2.44 Ah • Li-ion second battery (6 cells) 4.0 Ah
AC adapter	• 65-watt type
Preinstalled operating system	• Windows XP Professional • Windows Vista™ Business (32 bit) • Windows Vista Ultimate (32 bit)

Status indicators

The system status indicators show the status of the computer, as follows:

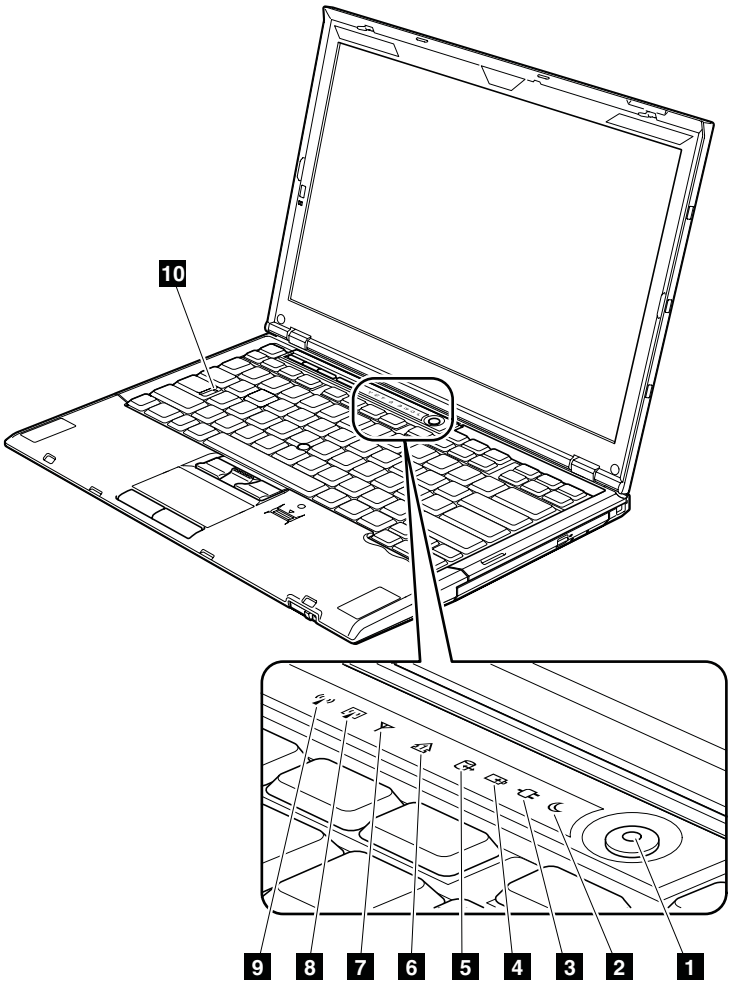

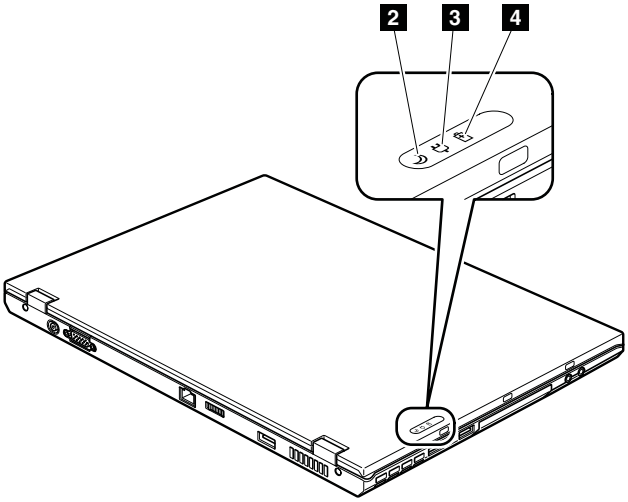

Table 8. Status indicators

Indicator	Meaning
1 Power on	**Green:** The computer is on and ready to use. This indicator stays lit whenever the computer is on and is not in standby mode.
2 Standby status	**Green:** The computer is in standby mode. **Blinking green:** The computer is entering standby mode or hibernation mode, or is resuming normal operation.
3 AC power status	**Green:** The computer is connected to the ac power supply.
4 Battery status	**Green:** The battery is charged between 80% to 100% of the capacity, and being discharged between 0% to 80% of the capacity. **Blinking green:** The battery is charged between 20% to 80% of the capacity, and being charged. **Orange:** The battery is charged between 5% and 20% of the capacity, and being discharged. **Blinking orange (slow):** The battery is charged between 5% to 20% of the capacity, and being charged. **Blinking orange (rapid):** The battery is charged between 0% to 5% of the capacity.
5 Drive in use	**Green:** Data is being read from or written to the hard disk drive, the diskette drive, or the drive in the Optical bay device. When this indicator is on, do not put the computer into standby mode or turn off the computer. **Note:** Do not move the system while the green drive-in-use light is on. Sudden physical shock could cause drive errors.
6 Num lock	**Green:** The numeric keypad on the keyboard is enabled. To enable or disable the keypad, press and hold the Shift key, and press the NumLk (ScrLk) key.
7 Wireless WAN status	**Green:** The wireless WAN is on, and the radio link is ready for use. **Blinking green:** Data is being transmitted.
8 Wireless PAN status	**Green:** Wireless PAN is operational. This indicator is on when Wireless PAN is on and not in suspend mode.
9 Wireless status	**Green:** The wireless feature (the IEEE 802.11 standard or IEEE 802.11n) is on, and the radio link is ready for use. **Blinking green:** Data is being transmitted.
10 Caps lock	**Green:** Caps Lock mode is enabled. To enable or disable Caps Lock mode, press the Caps Lock key.

FRU tests

The following table shows the test for each FRU.

Table 9. FRU tests

FRU	Applicable test
System board	1. **Diagnostics** --> **CPU/Coprocessor** 2. **Diagnostics** --> **Systemboard** 3. Place the computer on a horizontal surface, and run **Diagnostics** --> **ThinkPad Devices** --> **HDD Active Protection Test**. **Note:** Do not apply any physical shock to the computer while the test is running.
Power	**Diagnostics** --> **ThinkPad Devices** --> **AC Adapter**, **Battery 1 (Battery2)**
LCD unit	1. **Diagnostics** --> **Video Adapter** 2. **Interactive Tests** --> **Video**
Audio	Enter the BIOS Setup Utility and change Serial ATA (SATA) setting to **Compatibility**, and run **Diagnostics** --> **Other Devices** --> **Analog Devices HDA CODEC Test**
Speaker	**Interactive Tests** --> **Internal Speaker** **Note:** Once Audio test is done, the no sound is heard this test. In this case, turn off and turn on the computer. Then, run this test again.
PC Card slot	**Diagnostics** --> **Systemboard** --> **PCMCIA**
Keyboard	1. **Diagnostics** --> **Systemboard** --> **Keyboard** 2. **Interactive Tests** --> **Keyboard**
Hard disk drive or solid state drive	Enter the BIOS Setup Utility and change Serial ATA (SATA) setting to **Compatibility**, and run **Diagnostics** --> **Fixed Disks**
	You can also diagnose the drive without starting up the operating system. To diagnose the drive from the BIOS Setup Utility, do as follows: 1. Remove any diskette from the diskette drive, and then turn off the computer. 2. Turn on the computer. 3. While the message, “To interrupt normal startup, press the blue ThinkVangate button,” is displayed at the lower left of the screen, press F1 to enter the BIOS Setup Utility. 4. Using cursor keys, select **HDD diagnostic program**. Press enter. 5. Using cursor keys, select **Main hard disk drive** or **Ultrabay hard disk drive**. 6. Press Enter to start the diagnostic program.
Diskette drive	1. **Diagnostics** --> **Diskette Drives** 2. **Interactive Tests** --> **Diskette**
DVD drive or DVD/CD-RW combo drive	1. **Diagnostics** --> **Other Devices**--> **Optical Drive** 2. **Interactive Tests** --> **Optical Drive Test**
Memory	1. If two DIMMs are installed, remove one of them and run **Diagnostics** --> **Memory Test—Quick**. 2. If the problem does not recur, return the DIMM to its place, remove the other one, and run the test again. 3. If the test does not detect the error, run **Diagnostics** --> **Memory Test—Full**.

Table 9. FRU tests (continued)

FRU	Applicable test
Fan	1. Turn on the computer and check the air turbulence at the louver near the PC Card slot. 2. Run **Diagnostics** --> **ThinkPad Devices** --> **Fan**.
TrackPoint or pointing device	If the TrackPoint does not work, check the configuration as specified in the BIOS Setup Utility. If the TrackPoint is disabled, select **Automatic** to enable it. After you use the TrackPoint, the pointer may drift on the screen for a short time. This drift can occur when a slight, steady pressure is applied to the TrackPoint pointer. This symptom is not a hardware problem. If the pointer stops after a short time, no service action is necessary. If enabling the TrackPoint does not correct the problem, continue with the following: • **Interactive Tests** --> **Mouse**
Touch Pad	If the Touch Pad does not work, check the configuration as specified in the BIOS Setup Utility. If the Touch Pad is disabled, select **Automatic** to enable it. If enabling the Touch Pad does not correct the problem, continue with the following: • **Interactive Tests** --> **Mouse**

Fn key combinations

The following table shows the function of each combination of Fn with a function key.

Table 10. Fn key combinations

Key combination	Description
Fn+F1	Reserved.
Fn+F2	Reserved.
Fn+F3	Select a power scheme that has been created by Power Manager. When you press this combination, a panel for selecting a power scheme appears. **Notes:** 1. To use the Fn+F3 key combination, you must have the ThinkPad PM device driver installed on the computer. 2. If you have logged on with an administrator user ID, and you press Fn+F3, the panel for selecting a power scheme appears. If you have logged on with another user ID, and you press Fn+F3, the panel does not appear. 3. You cannot turn off the computer display by pressing Fn+F3.
Fn+F4	Put the computer in standby mode. To return to normal operation, press the Fn key only, without pressing a function key. **Notes:** 1. To use the Fn+F4 key combination, you must have the ThinkPad PM device driver installed on the computer. 2. This combination of keys also functions as a sleep button. If you want to use the combination to put the computer into hibernation mode or shut the computer down, change the settings in the Power Manager.
Fn+F5	Enable or disable the built-in wireless networking features and the *Bluetooth* features. If you press Fn+F5, a list of wireless features is displayed. You can quickly change the power state of each feature in the list. **Note:** If you want to use Fn+F5 to enable the feature specified in IEEE standard 802.11, the following device drivers must be installed on the computer beforehand: • ThinkPad Power Management driver • OnScreen Display Utility • Wireless device drivers
Fn+F6	Reserved.

Table 10. Fn key combinations (continued)

Key combination	Description
Fn+F7	Apply a presentation scheme directly, with no need to start Presentation Director. To disable this function and use the Fn+F7 key combination for switching a display output location, start Presentation Director, and change the settings.
	Switch a display output location • External monitor (CRT display) • Computer display and external monitor (LCD + CRT display) • Computer display (LCD) **Notes:** 1. This function is not supported if different desktop images are displayed on the computer display and the external monitor (the Extend desktop function). 2. This function does not work while a DVD movie or a video clip is playing. To enable this function, start Presentation Director, and change the Fn+F7 settings. **Note:** Multiple users can log on to a single operating system by using different user IDs. Each user needs to change the settings.
Fn+F8	Change the settings of the UltraNav pointing device.
Fn+F9	Open the ThinkPad EasyEject Utility screen. Buttons for the following choices are displayed: • **Run EasyEject Actions**: This button is used to select, stop, or remove external devices connected to the ThinkPad computer. • **Configure EasyEject Actions**: Opens the ThinkPad EasyEject Utility main window. • **Fn+F9 Settings**: Configures the settings for the Fn+F9 function.
Fn+F10	Reserved.
Fn+F11	Reserved.
Fn+F12	Put the computer into hibernation mode. To return to normal operation, press the power button for less than four seconds. **Note:** To use Fn+F12 for hibernation, you must have the ThinkPad PM device driver installed on the computer.
Fn+PgUp	Turn the ThinkLight on or off. **Note:** This function is supported only on the ThinkPad computers that have the ThinkLight. The on or off status of the ThinkLight is shown on the screen for a few seconds when you press Fn+PgUp.
Fn+Home	The computer display becomes brighter.
Fn+End	The computer display becomes dimmer.
Fn+Spacebar	Enable the FullScreen Magnifier function.
Fn+PrtSc	Has the same function as the SysRq key.
Fn+ScrLk	Enable or disable the numeric keypad.
Fn+Pause	Has the same function as the Break key.
Fn+cursor keys	These key combinations work with Windows Windows Media Player. Fn+down arrow key works for the Play or Pause button, Fn+up arrow key for the Stop button, Fn+right arrow key for the Next Track button, and Fn+left arrow key for the Previous Track button.

FRU replacement notices

This section contains notices related to removing and replacing parts. Read this section carefully before replacing any FRU.

Screw notices

Loose screws can cause a reliability problem. In the ThinkPad computer, this problem is addressed with special nylon-coated screws that have the following characteristics:

- They maintain tight connections.
- They do not easily come loose, even with shock or vibration.
- They are harder to tighten.
- Each one should be used only once.

Do the following when you service this machine:

- Keep the screw kit (for the P/N, see "Miscellaneous parts" on page 126) in your tool bag.
- Always use new screws.
- Use a torque screwdriver if you have one.

Tighten screws as follows:

- **Plastic to plastic**

  Turn an additional **90 degrees** after the screw head touches the surface of the plastic part:

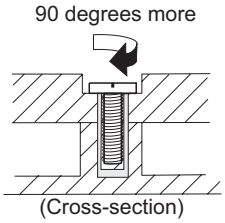

- **Logic card to plastic**

  Turn an additional **180 degrees** after the screw head touches the surface of the logic card:

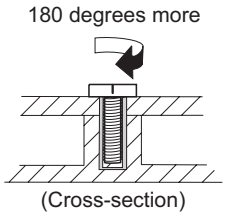

- **Torque driver**

  If you have a torque driver, refer to the "Torque" column for each step.
- Make sure that you use the correct screw. If you have a torque screwdriver, tighten all screws firmly to the torque shown in the table. **Never use a screw that you removed. Use a new one. Make sure that all of the screws are tightened firmly.**
- Ensure torque screw drivers are calibrated correctly following country specifications.

Retaining serial numbers

This section includes the following descriptions:
- "Restoring the serial number of the system unit"
- "Retaining the UUID"
- "Reading or writing the ECA information" on page 58

Restoring the serial number of the system unit

When the computer was manufactured, the EEPROM on the system board was loaded with the serial numbers of the system and all major components. These numbers need to remain the same throughout the life of the computer.

If you replace the system board, you must restore the serial number of the system unit to its original value.

Before replacing the system board, save the original serial number by doing the following:

1. Install the ThinkPad Hardware Maintenance Diskette Version 1.73 or later, and restart the computer.
2. From the main menu, select **1. Set System Identification**.
3. Select **2. Read S/N data from EEPROM**.

The serial number of each device in your computer is displayed; the serial number of the system unit is listed as follows:
- 20: Serial number

Write down that number.

Note: The serial number of the system unit is also written on the label attached to the bottom of the computer.

After you have replaced the system board, restore the serial number by doing the following:

1. Install the ThinkPad Hardware Maintenance Diskette Version 1.73 or later and restart the computer.
2. From the main menu, select **1. Set System Identification**.
3. Select **1. Add S/N data from EEPROM**.

   Follow the instructions on the screen.

If the MTM and Product ID numbers differ from each other on the rear label, use what is shown for the Product ID field. See example below:

MTM on rear label:
TTTT-CTO S/N SSSSSSS

Product ID on rear label:
TTTT-MMM (Use this number when setting Serial Number)

In the example, the Serial Number to be input is '1STTTTMMMSSSSSSS.'

Retaining the UUID

The Universally Unique Identifier (UUID) is a 128-bit number uniquely assigned to your computer at production and stored in the EEPROM of your system board. The algorithm that generates the number is designed to provide unique IDs until the year A.D. 3400. No two computers in the world have the same number.

When you replace the system board, you must set the UUID on the new system board as follows:

1. Install the ThinkPad Hardware Maintenance Diskette Version 1.73 or later, and restart the computer.
2. From the main menu, select **4. Assign UUID**.

   A new UUID is created and written. If a valid UUID already exists, it is not overwritten.

Reading or writing the ECA information

Information on Engineering Change Announcements (ECA) are stored in the EEPROM of the system board. The electronic storage of this information simplifies the procedure to check if the ECA has been previously applied to a machine. The machine does not need to be disassembled to check for the ECA application.

To check what ECAs have been previously applied to the machine, use the ECA Information Read/Write function on the ThinkPad Hardware Maintenance Diskette Version 1.73 or later.

1. Insert the ThinkPad Hardware Maintenance Diskette Version 1.73 or later, and restart the computer.
2. From the main menu, select **6. Set ECA Information**.
3. To read ECA information, select **2. Read ECA/rework number from EEPROM** and follow the instruction.
4. To read box build date, select **5. Read box build date from EEPROM**, and follow the instruction on the screen.

After an ECA has been applied to the machine, the EEPROM must be updated to reflect the ECA's application. Use the ThinkPad Hardware Maintenance Diskette Version 1.73 or later to update the EEPROM.

Note: Only the ECA number is stored in the EEPROM. The machine type of the ECA is assumed be the same as the machine type of the machine that had the ECA applied to it.

1. Insert the ThinkPad Hardware Maintenance Diskette Version 1.73 or later, and restart the computer.
2. From the main menu, select **6. Set ECA Information**.
3. To write ECA information, select **1. Write ECA/rework number from EEPROM**, and follow the instruction.
4. To write box build date, select **4. Write box build date from EEPROM**, and follow the instruction on the screen.

If the system board is being replaced, try to read the ECA information from the old system board and transfer the information to the new system. If the system board is inoperable, this will not be possible.

Removing and replacing a FRU

This section presents directions and drawings for use in removing and replacing a FRU. Be sure to observe the following general rules:

1. Do not try to service any computer unless you have been trained and certified. An untrained person runs the risk of damaging parts.
2. Before replacing any FRU, review "FRU replacement notices" on page 55.
3. Begin by removing any FRUs that have to be removed before the failing FRU. Any such FRUs are listed at the top of the page. Remove them in the order in which they are listed.
4. Follow the correct sequence in the steps for removing the FRU, as given in the drawings by the numbers in square callouts.
5. When turning a screw to replace a FRU, turn it in the direction as given by the arrow in the drawing.
6. When removing the FRU, move it in the direction as given by the arrow in the drawing.
7. To put the new FRU in place, reverse the removal procedure and follow any notes that pertain to replacement. For information about connecting and arranging internal cables, see "Locations" on page 115.
8. When replacing a FRU, use the correct screw as shown in the procedures.

⚠ DANGER

Before removing any FRU, turn off the computer, unplug all power cords from electrical outlets, remove the battery pack, and then disconnect any interconnecting cables.

Attention: After replacing a FRU, do not turn on the computer until you have made sure that all screws, springs, and other small parts are in place and none are loose inside the computer. Verify this by shaking the computer gently and listening for rattling sounds. Metallic parts or metal flakes can cause electrical short circuits.

Attention: The system board is sensitive to, and can be damaged by, electrostatic discharge. Before touching it, establish personal grounding by touching a ground point with one hand or by using an electrostatic discharge (ESD) strap (P/N 6405959).

Before servicing ThinkPad X300

Removing the SIM card:

Some models of the ThinkPad X300 you are servicing might have the SIM card that the customer has been installed.

If the computer you are servicing has the SIM card, remove it before you start the servicing.

To remove the SIM card, you need to remove the battery pack first. (See "1010 Battery pack" on page 61.)

After you finish the servicing, make sure that you insert the card back into the slot firmly.

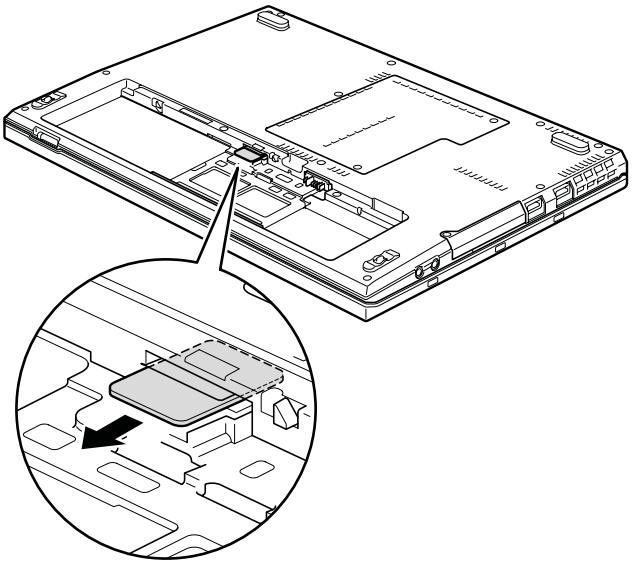

Notice on disconnecting the cable from flip-lock ZIF connector:

Some cables used in the ThinkPad X300 are connected to the flip-lock ZIF connectors.

When disconnecting the cable from those connectors, do as shown in this figure.

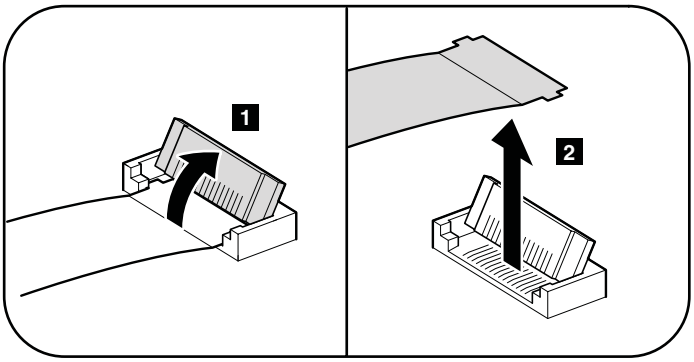

1010 Battery pack

Table 11. Removal steps of battery pack

Unlock the battery latch **1**. Holding the battery lock lever in the unlocked position **2**, remove the battery pack in the direction shown by arrow **3** and **4**.

Note: Large battery used in some models only has one battery latch.

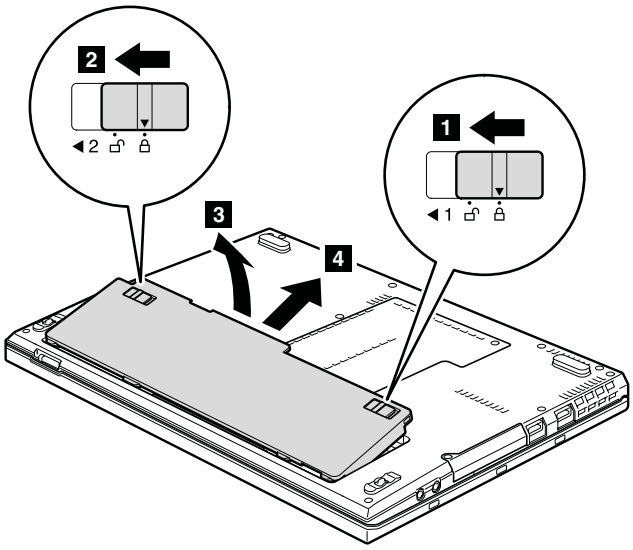

When installing: Install the battery pack along the slide rails of the slot. Then make sure that the battery release lever is in the locked position.

1020 Second battery or travel cover (some models)

For access, remove this FRU:
- "1010 Battery pack" on page 61

Table 12. Removal steps of second battery or travel cover

Note: For models with the travel cover, skip step **1**.

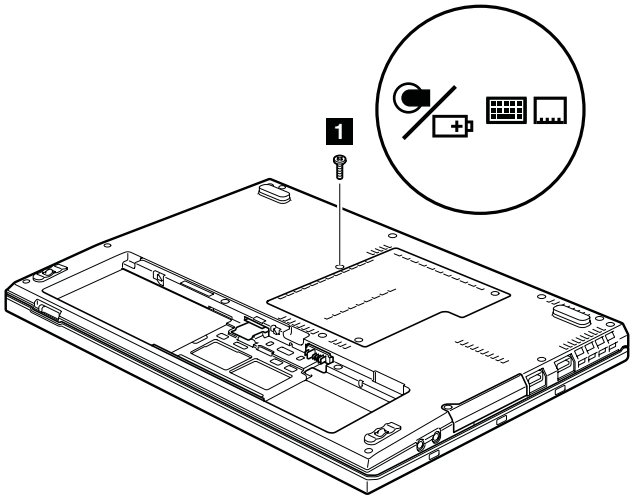

Step	Screw (quantity)	Color	Torque
1	M2 × 6 mm, bind-head, nylon-coated (1)	Black	0.167 Nm (1.7 kgfcm)

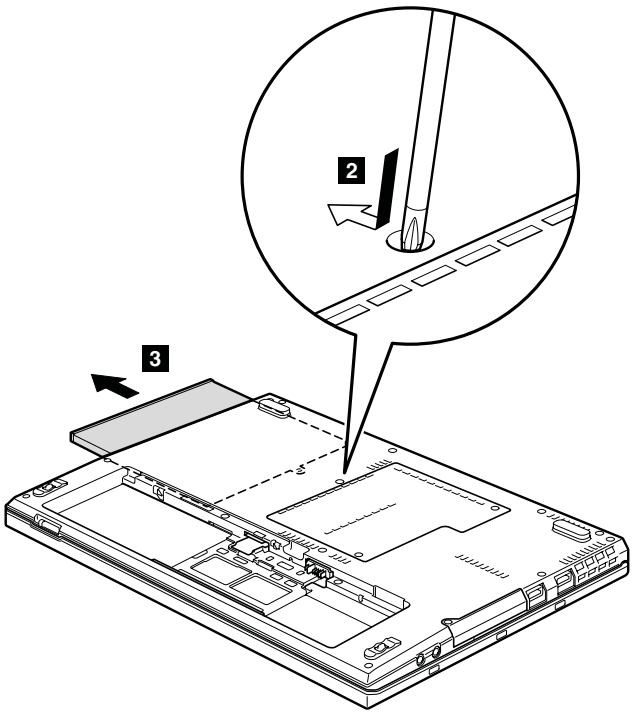

1030 Solid state drive (SSD)

For access, remove these FRUs in order:
- "1010 Battery pack" on page 61
- "1020 Second battery or travel cover (some models)" on page 62

Attention:
- **Do not drop the drive or apply any physical shock to it.** The drive is sensitive to physical shock. Improper handling can cause damage and permanent loss of data.
- Before removing the drive, have the user make a backup copy of all the information on it if possible.
- Never remove the drive while the system is operating or is in suspend mode.

Table 13. Removal steps of SSD

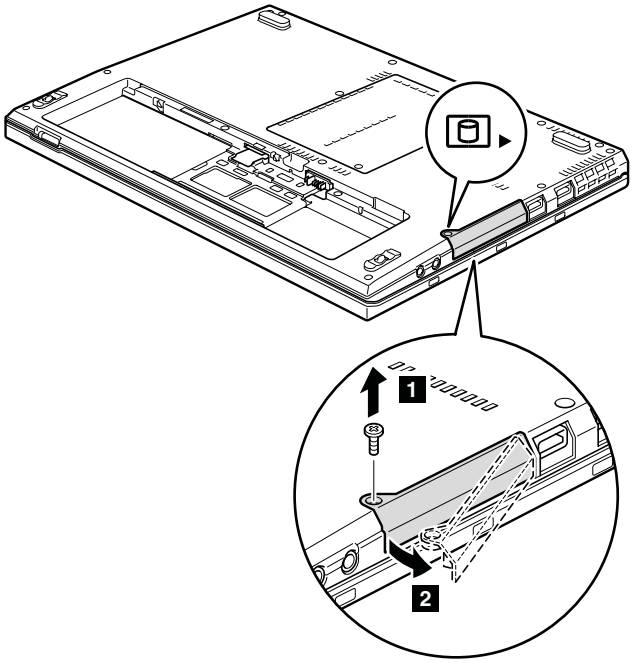

Step	Screw (quantity)	Color	Torque
2	Hard disk drive screw, nylon-coated (1)	Black	0.167 Nm (1.7 kgfcm)

Table 13. Removal steps of SSD (continued)

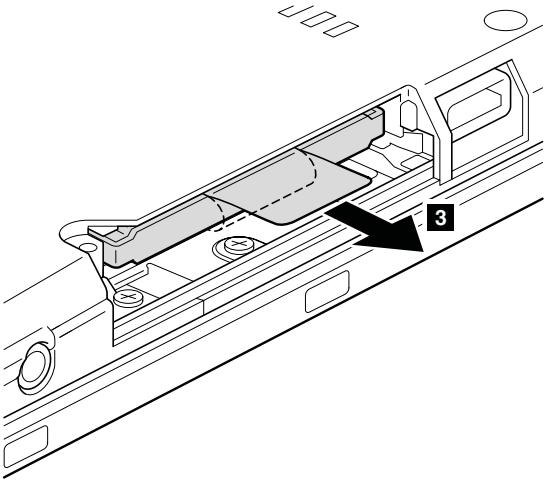

When installing: Make sure that the SSD connector is attached firmly.

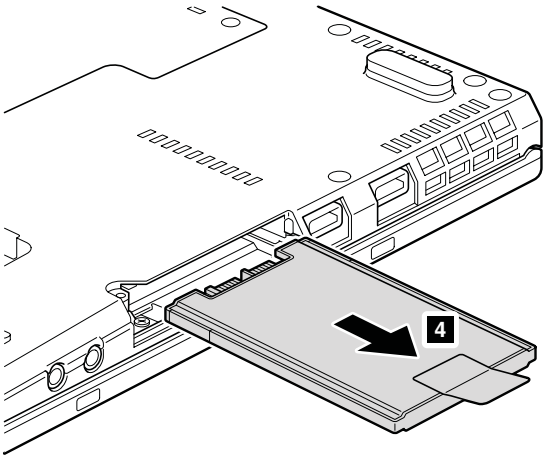

1040 DIMM

For access, remove these FRUs in order:

- "1010 Battery pack" on page 61
- "1020 Second battery or travel cover (some models)" on page 62

Table 14. Removal steps of DIMM

Note: Loosen the screws **1**, but do not remove them.

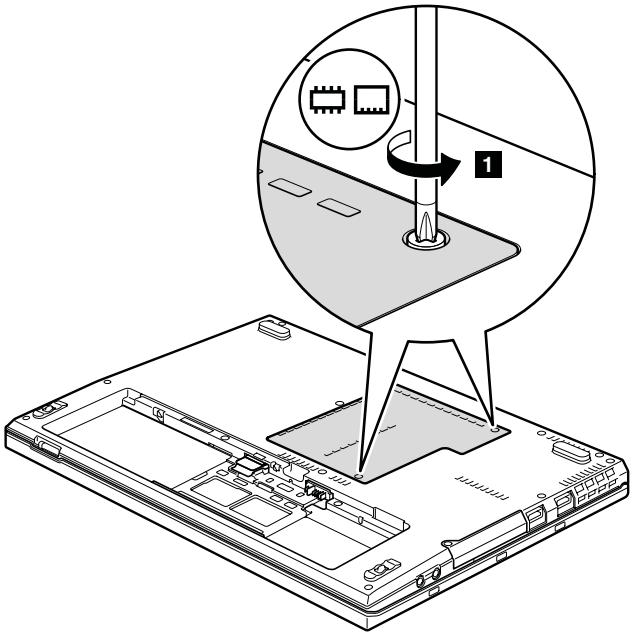

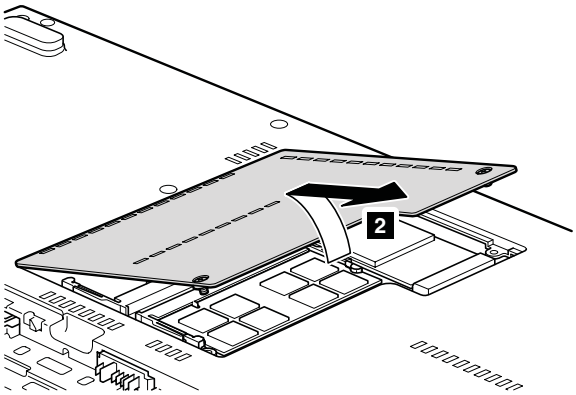

Table 14. Removal steps of DIMM (continued)

Note: If only one DIMM is used on the computer you are servicing, the card must be installed in SLOT-0 (**a**), but not in SLOT-1 (**b**).

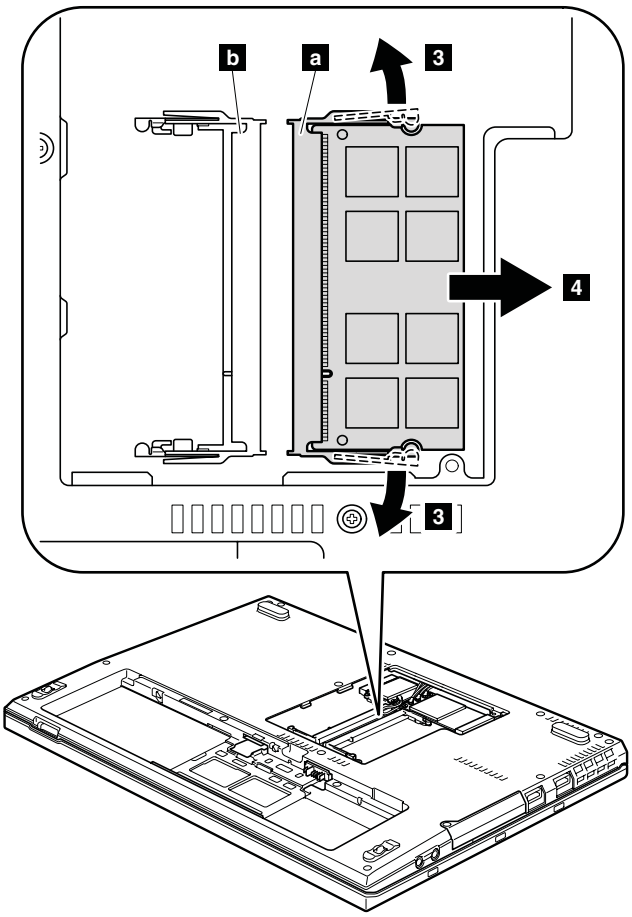

When installing: Insert the notched end of the DIMM into the socket. Press the DIMM firmly, and pivot it until it snaps into the place. Make sure that it is firmly fixed in the slot and does not move easily.

1050 PCI Express Mini Card for wireless LAN

For access, remove these FRUs in order:

- "1010 Battery pack" on page 61
- "1020 Second battery or travel cover (some models)" on page 62

Table 15. Removal steps of PCI Express Mini Card for wireless LAN

Note: Loosen the screws **1**, but do not remove them.

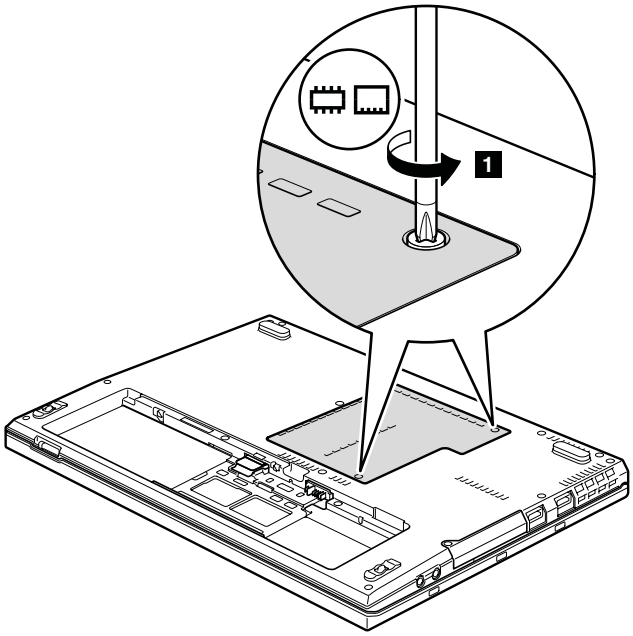

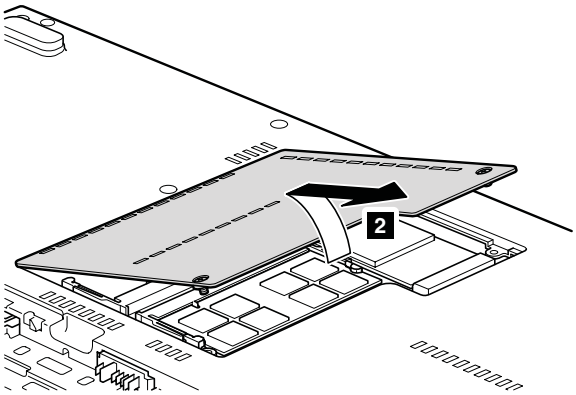

Table 15. Removal steps of PCI Express Mini Card for wireless LAN (continued)

In step **3**, unplug the jacks by using the removal tool antenna RF connector (P/N: 08K7159) or pick the connectors with your fingers and gently unplug them in direction of the arrow.

Note: Some models might have only two antenna cables in step **3**.

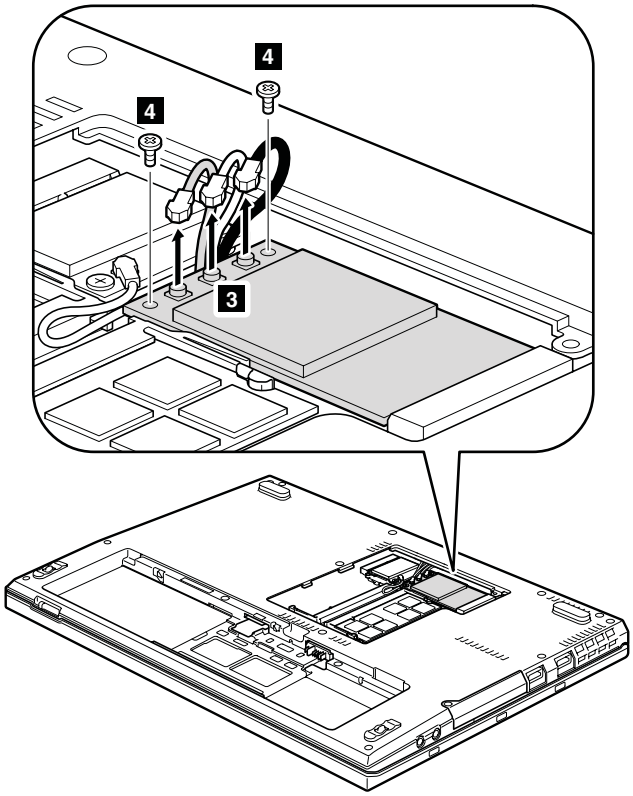

Step	Screw (quantity)	Color	Torque
4	M2 × 3 mm, small-head, nylon-coated (2)	Silver	0.167 Nm (1.7 kgfcm)

Table 15. Removal steps of PCI Express Mini Card for wireless LAN (continued)

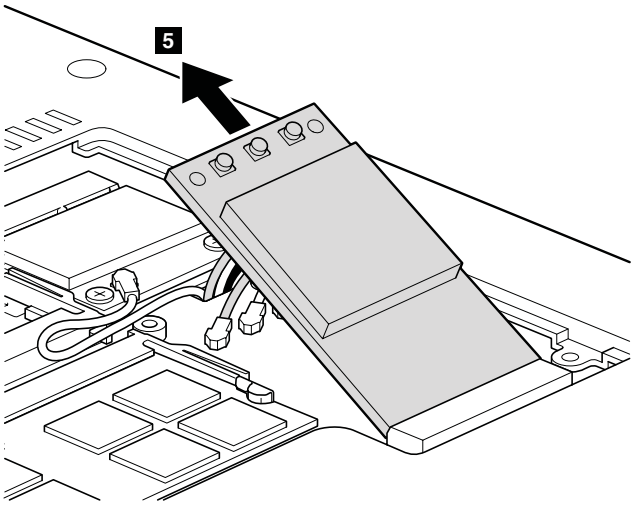

When installing:

- In models with wireless LAN card that has two antenna connectors, plug the gray cable into the jack labeled **MAIN**, and the black cable into the jack labeled **AUX** on the card. If the computer you are servicing has three cables, put the white cable in the cable holder.
- In models with wireless LAN card that has three antenna connectors, plug the gray cable (MAIN) into the jack labeled **TR1**, the white cable (3rd) into jack labeled **R0**or **TR3** , and the black cable (AUX) into jack labeled **TR2** on the card.

1060 Wireless USB adapter

For access, remove these FRUs in order:
- "1010 Battery pack" on page 61
- "1020 Second battery or travel cover (some models)" on page 62

Table 16. Removal steps of wireless USB adapter

Note: Loosen the screws **1**, but do not remove them.

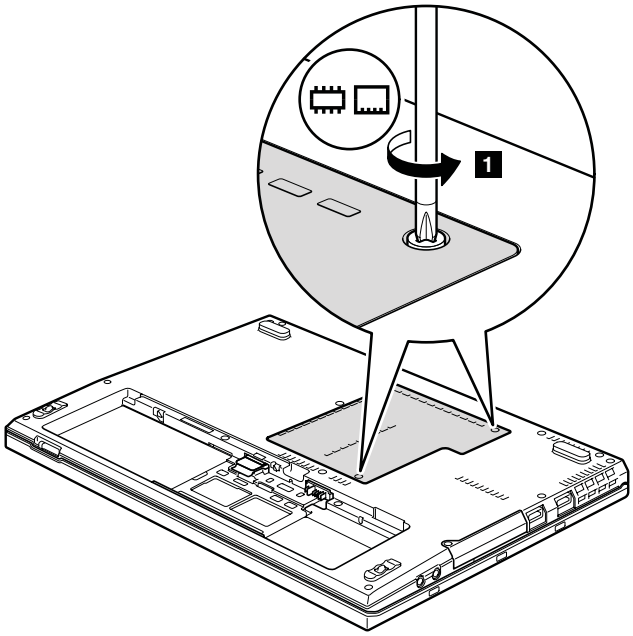

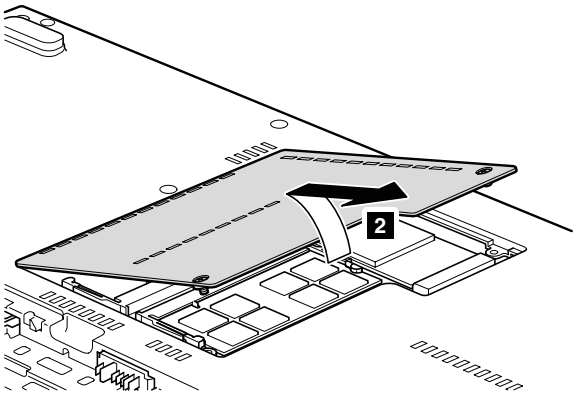

Table 16. Removal steps of wireless USB adapter (continued)

In step **3**, unplug the jacks by using the removal tool antenna RF connector (P/N: 08K7159) or pick the connectors with your fingers and gently unplug them in direction of the arrow.

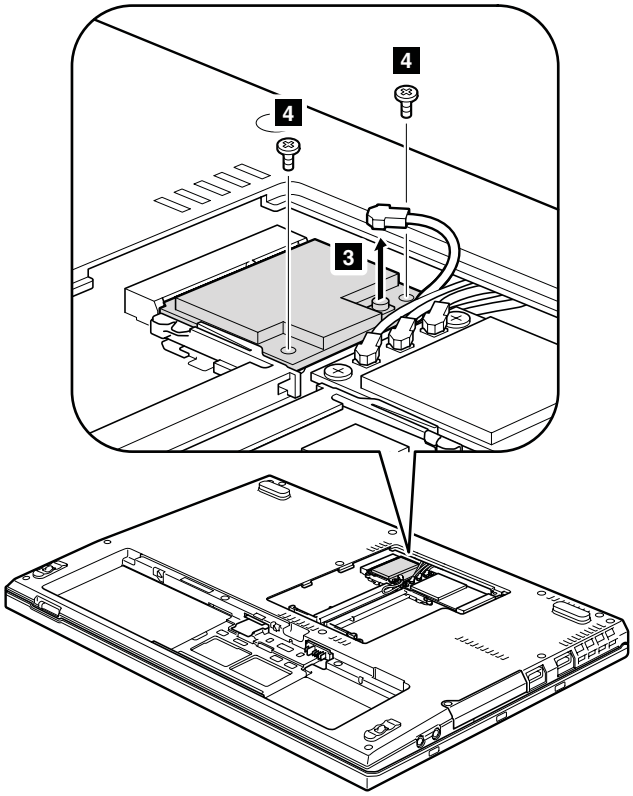

Step	Screw (quantity)	Color	Torque
4	For Japan		
	M2 × 3 mm, tamper proof (2)	Black	0.189 Nm (1.85 kgfcm)
	Other than Japan		
	M2 × 3 mm, small-head, nylon-coated (2)	Silver	0.189 Nm (1.85 kgfcm)

Table 16. Removal steps of wireless USB adapter (continued)

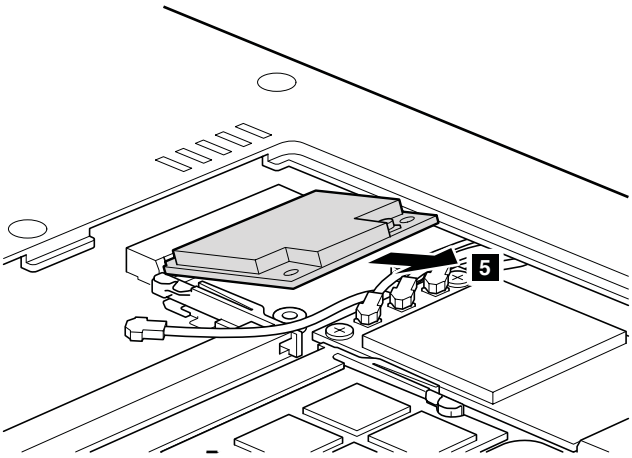

1070 Keyboard

For access, remove these FRUs in order:
- "1010 Battery pack" on page 61
- "1020 Second battery or travel cover (some models)" on page 62

Table 17. Removal steps of keyboard

Attention: If a travel cover is installed on the computer you are servicing, you need to remove it before removing the screw that secures the keyboard. In models with the travel cover, screw **1a** should have been removed when you removed the travel cover.

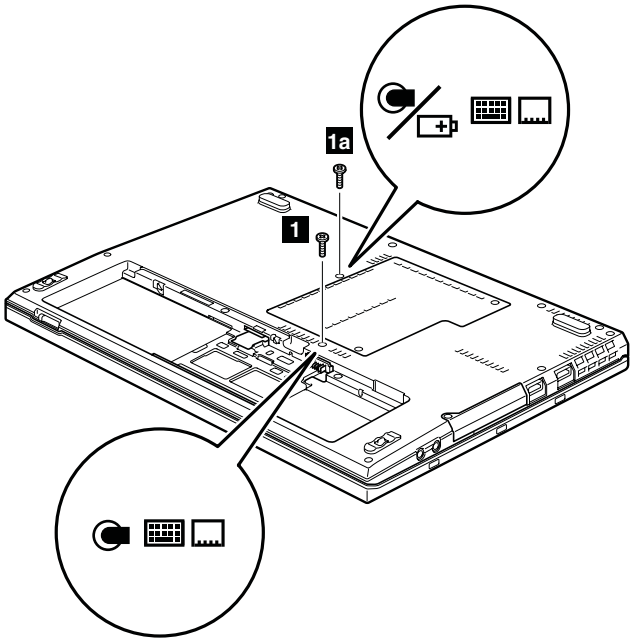

Step	Screw (quantity)	Color	Torque
1	M2 × 6 mm, bind-head, nylon-coated (1)	Black	0.167 Nm (1.7 kgfcm)
1a	M2 × 6 mm, bind-head, nylon-coated (1)	Black	0.167 Nm (1.7 kgfcm)

Table 17. Removal steps of keyboard (continued)

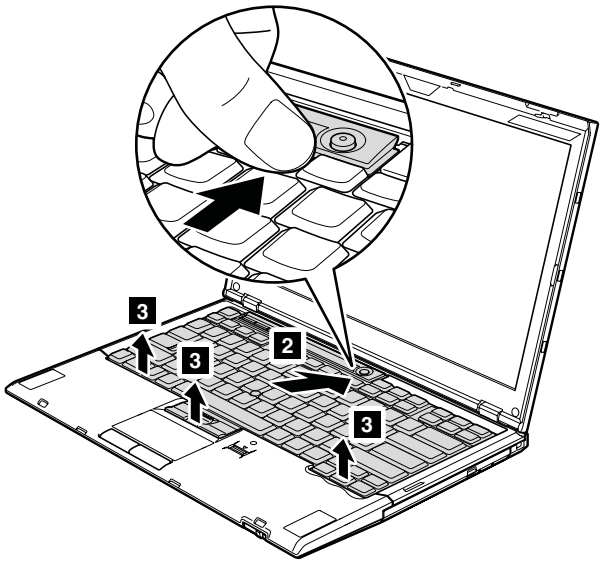

Lift the keyboard a little in the direction shown by arrow **4**, and then detach the connector **5**.

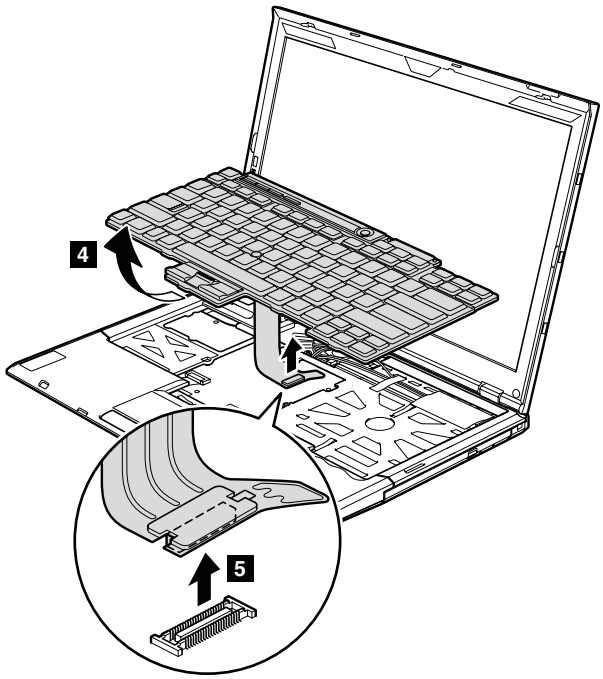

When installing the keyboard, do as follows:

Table 18. Installation of the keyboard

1. Attach the keyboard connector.

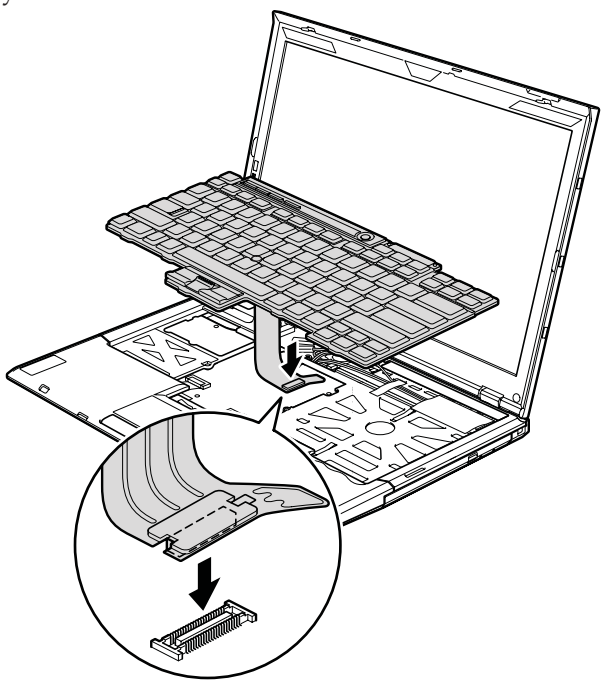

2. Attach the keyboard so that the keyboard edges **a** are under the frame as shown in this figure.

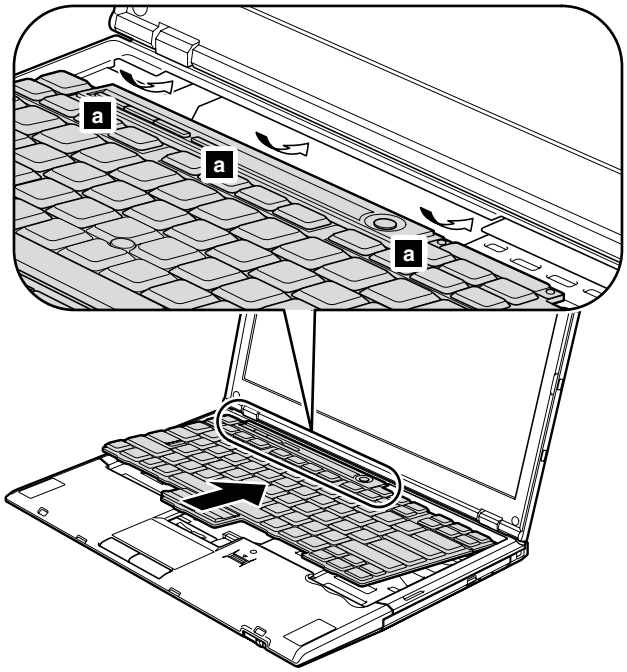

Table 18. Installation of the keyboard (continued)

3. To make sure that the front side of the keyboard is housed firmly, gently press the keys with your thumbs and try to slide the keyboard toward you.

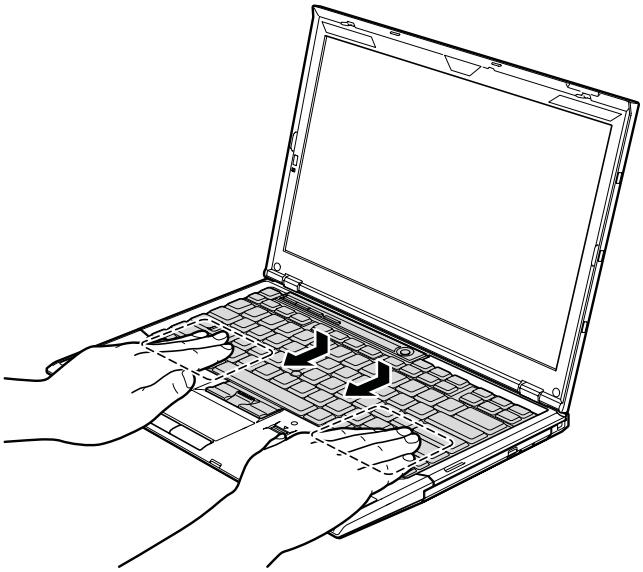

4. Secure the keyboard by tightening the screws from the bottom side of the computer.

1080 Optical drive

For access, remove these FRUs in order:

- "1010 Battery pack" on page 61
- "1070 Keyboard" on page 73

Table 19. Removal steps of optical drive

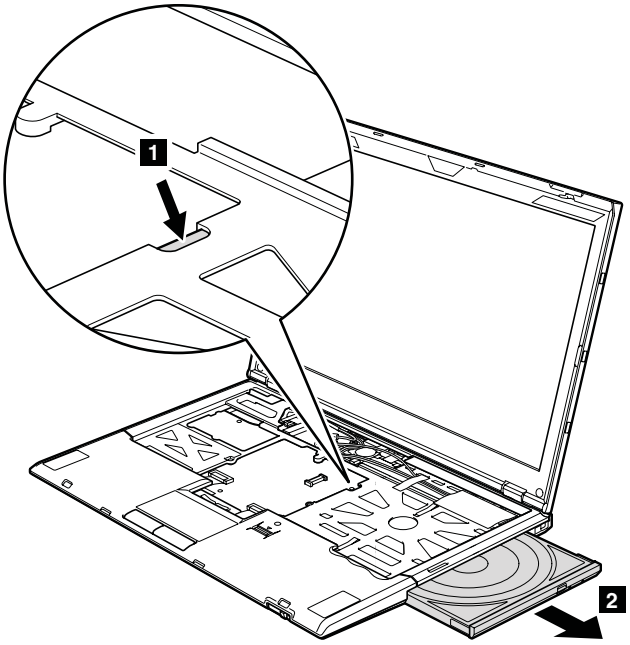

1090 Backup battery

⚠ **DANGER**

Use only the battery specified in the parts list for your computer. Any other battery could ignite or explode.

For access, remove these FRUs in order:
- "1010 Battery pack" on page 61
- "1020 Second battery or travel cover (some models)" on page 62
- "1070 Keyboard" on page 73

Table 20. Removal steps of backup battery

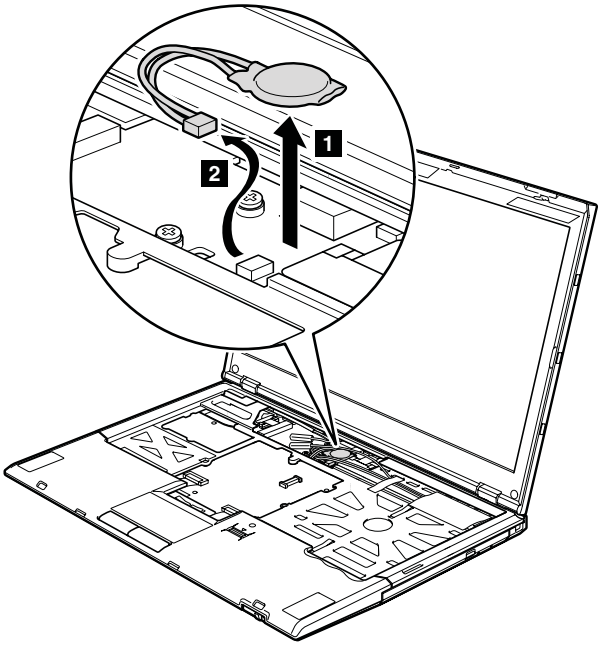

When installing: Make sure that the battery connector is attached firmly.

1100 PCI Express Mini Card for wireless WAN

For access, remove these FRUs in order:
- "1010 Battery pack" on page 61
- "1020 Second battery or travel cover (some models)" on page 62
- "1070 Keyboard" on page 73

Table 21. Removal steps of PCI Express Mini Card for wireless WAN

In step **1**, unplug the jacks by using the removal tool antenna RF connector (P/N: 08K7159) or pick the connectors with your fingers and gently unplug them in direction of the arrow.

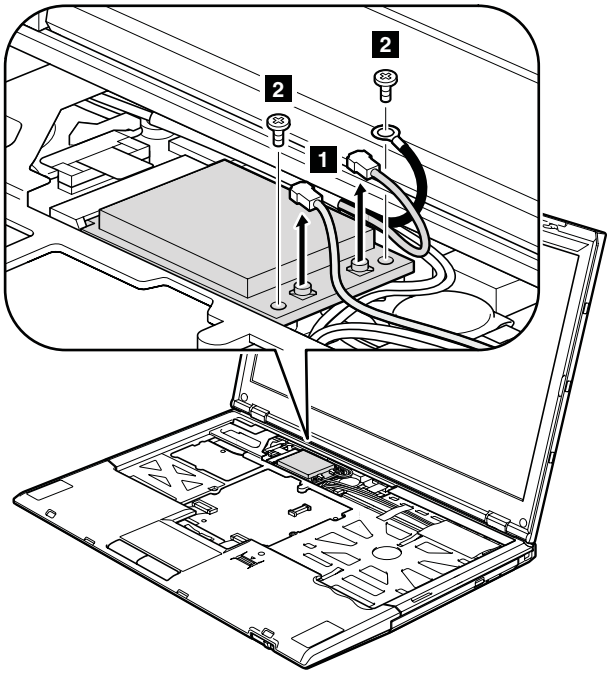

Step	Screw (quantity)	Color	Torque
2	M2 × 3 mm, small-head, nylon-coated (2)	Silver	0.167 Nm (1.7 kgfcm)

Table 21. Removal steps of PCI Express Mini Card for wireless WAN (continued)

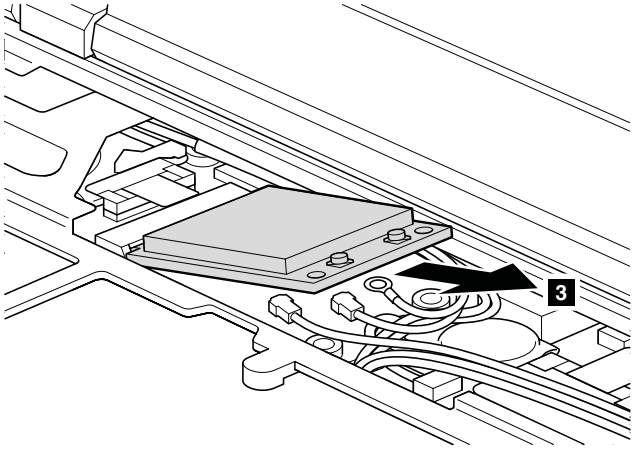

Note: Plug the red cable into the jack labeled **MAIN** on the card, and the blue cable into the jack labeled **AUX**.

1110 Palm rest or palm rest with fingerprint reader

For access, remove these FRUs in order:
- "1010 Battery pack" on page 61
- "1020 Second battery or travel cover (some models)" on page 62
- "1070 Keyboard" on page 73

> **Note:**
> In models with the fingerprint reader, the sensor is attached to the palm rest FRU. If the fingerprint reader has any defects, you can replace it by the procedures given in this section, which are the same for a palm rest with or without a fingerprint reader.

Table 22. Removal steps of palm rest

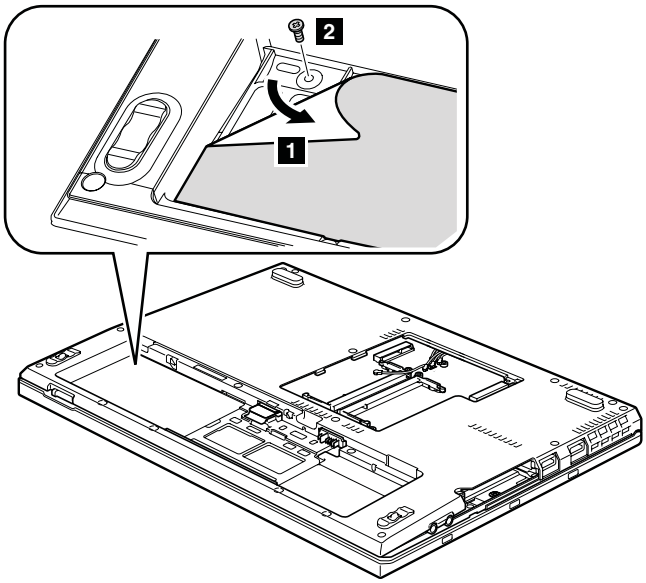

Step	Screw (quantity)	Color	Torque
2	M2 × 3 mm, small-head, nylon-coated (1)	Black	0.167 Nm (1.7 kgfcm)

Table 22. Removal steps of palm rest (continued)

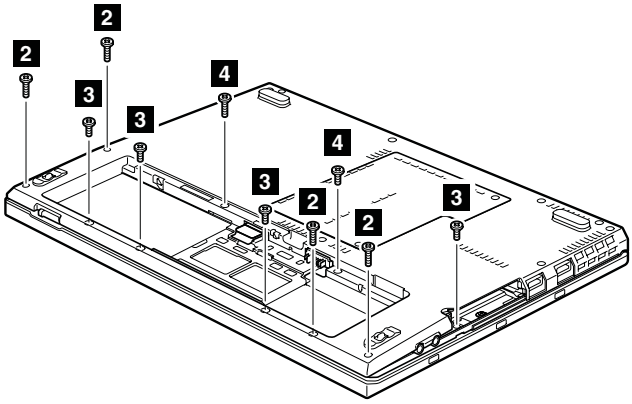

Step	Screw (quantity)	Color	Torque
2	M2 × 6 mm, bind-head, nylon-coated (4)	Black	0.167 Nm (1.7 kgfcm)
3	M2 × 4 mm, bind-head, nylon-coated (4)	Black	0.167 Nm (1.7 kgfcm)
4	M2, shoulder, nylon-coated (2)	Black	0.167 Nm (1.7 kgfcm)

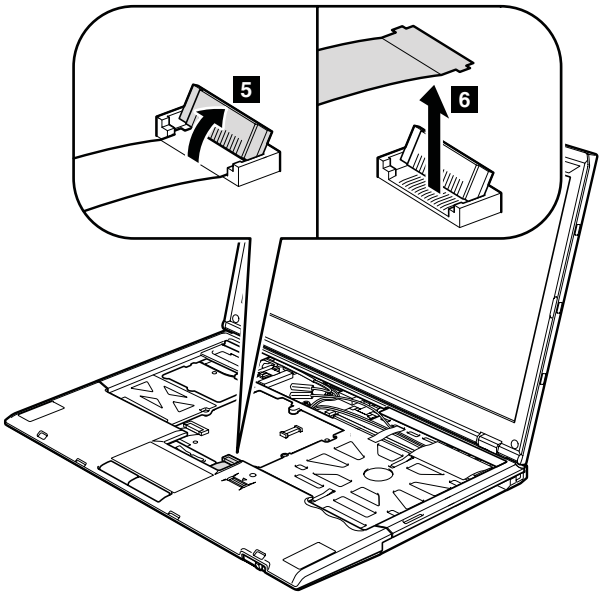

Table 22. Removal steps of palm rest (continued)

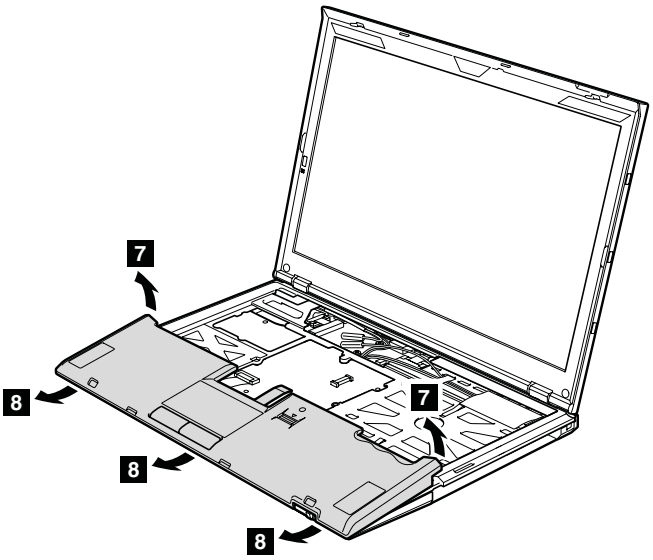

1120 *Bluetooth* daughter card (BDC-2)

For access, remove these FRUs in order:
- "1010 Battery pack" on page 61
- "1020 Second battery or travel cover (some models)" on page 62
- "1070 Keyboard" on page 73
- "1110 Palm rest or palm rest with fingerprint reader" on page 81

Table 23. Removal steps of BDC-2

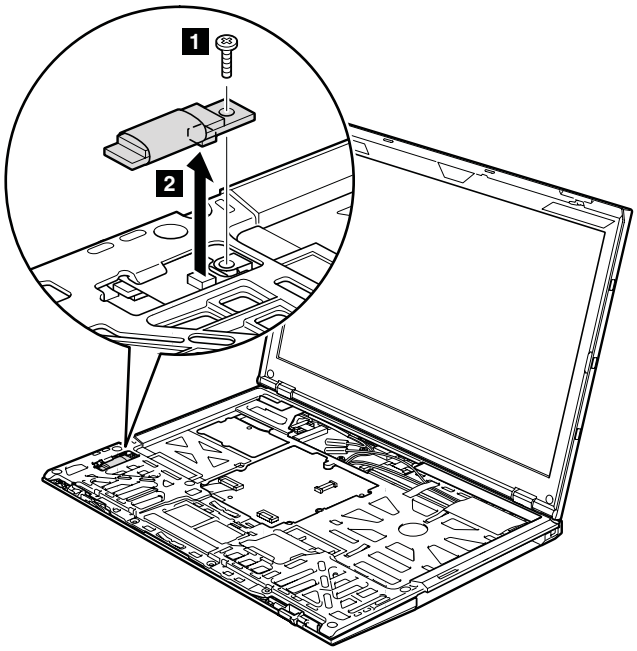

Step	Screw (quantity)	Color	Torque
1	M2 × 6 mm, bind-head, nylon-coated (1)	Black	0.167 Nm (1.7 kgfcm)

When installing: Make sure that connector is attached firmly.

1130 Keyboard bezel

For access, remove these FRUs in order:

- "1010 Battery pack" on page 61
- "1020 Second battery or travel cover (some models)" on page 62
- "1050 PCI Express Mini Card for wireless LAN" on page 67
- "1060 Wireless USB adapter" on page 70
- "1070 Keyboard" on page 73
- "1100 PCI Express Mini Card for wireless WAN" on page 79
- "1110 Palm rest or palm rest with fingerprint reader" on page 81

Table 24. Removal steps of keyboard bezel

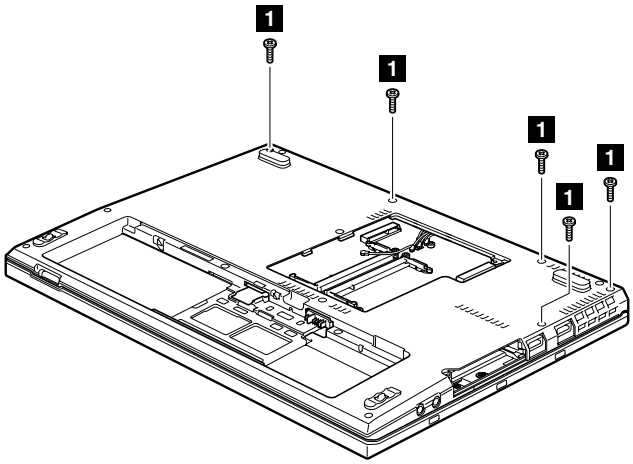

Step	Screw (quantity)	Color	Torque
1	M2 × 6 mm, bind-head, nylon-coated (5)	Black	0.167 Nm (1.7 kgfcm)

Table 24. Removal steps of keyboard bezel (continued)

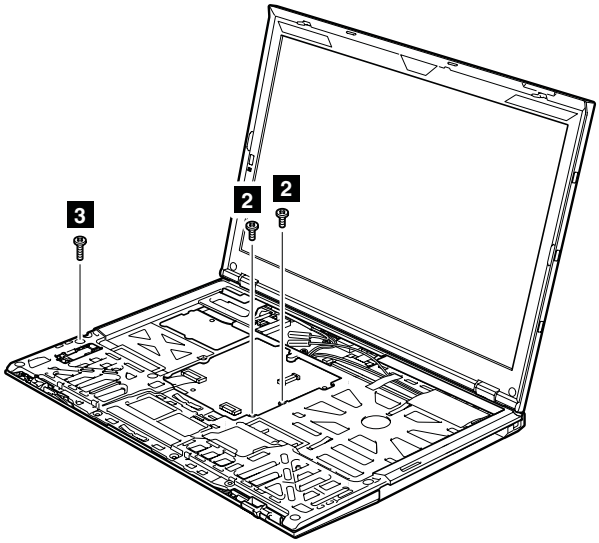

Step	Screw (quantity)	Color	Torque
2	M2 × 6 mm, bind-head, nylon-coated (2)	Black	0.167 Nm (1.7 kgfcm)
3	M2 × 4 mm, bind-head, nylon-coated (1)	Black	0.167 Nm (1.7 kgfcm)

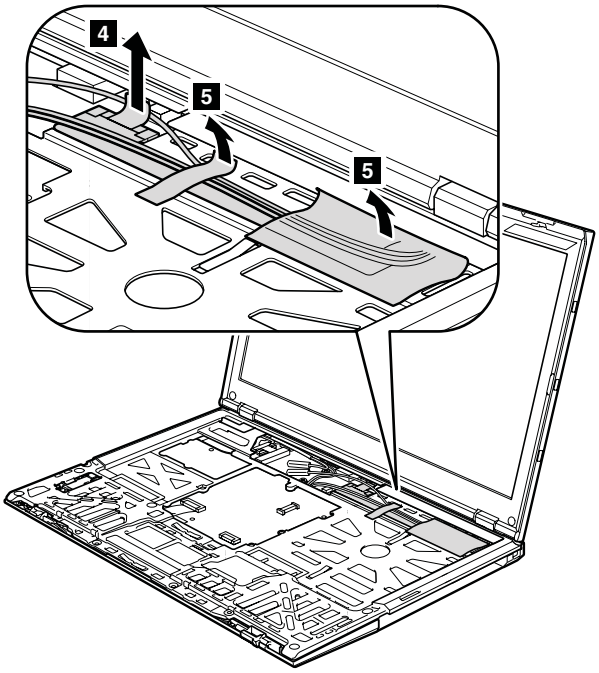

Table 24. Removal steps of keyboard bezel (continued)

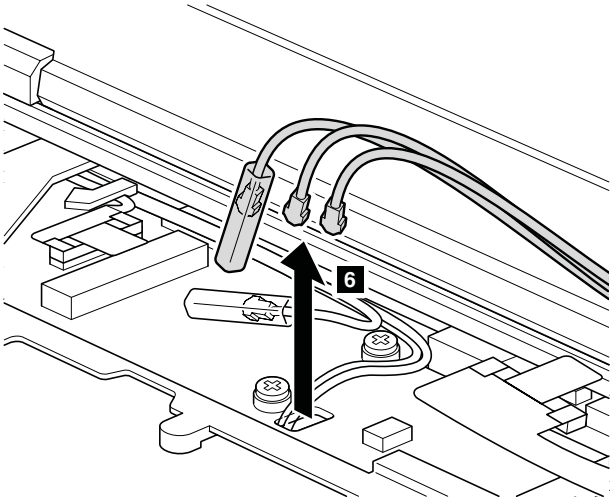

Note: Before step **8**, pull the cables out from the cable guide hole of the keyboard bezel as shown in **a** in this figure.

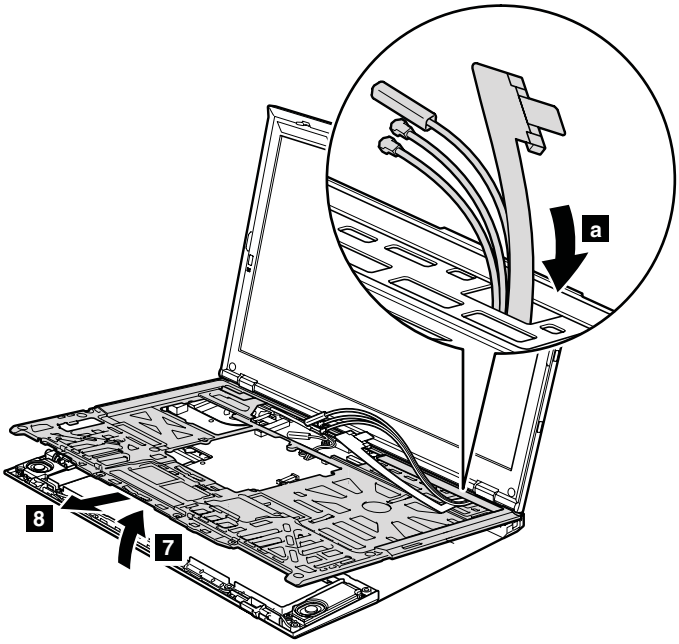

1140 Audio FPC and audio sub card

For access, remove these FRUs in order:

- "1010 Battery pack" on page 61
- "1020 Second battery or travel cover (some models)" on page 62
- "1050 PCI Express Mini Card for wireless LAN" on page 67
- "1060 Wireless USB adapter" on page 70
- "1070 Keyboard" on page 73
- "1100 PCI Express Mini Card for wireless WAN" on page 79
- "1110 Palm rest or palm rest with fingerprint reader" on page 81
- "1130 Keyboard bezel" on page 85

Table 25. Removal steps of audio FPC and audio sub card

Note: Step from 1 to 4 are for the audio FPC, and step 5 to 7 are for the audio sub card.

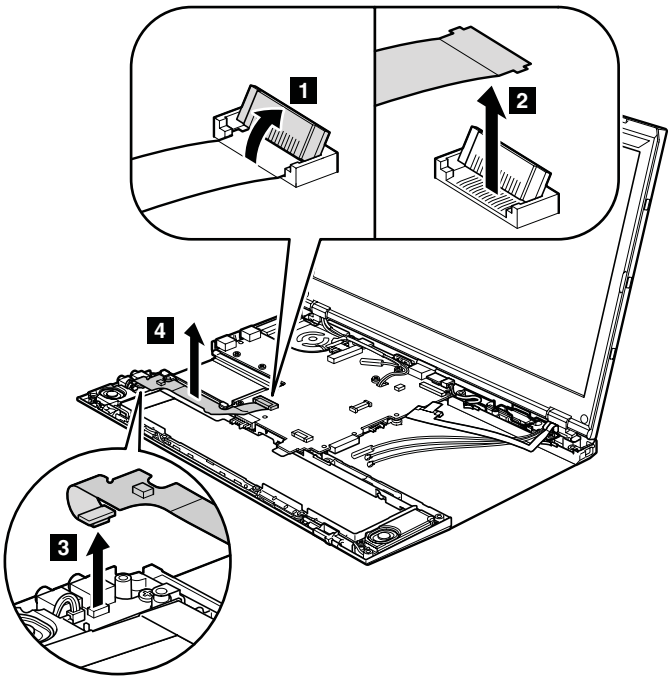

When installing: Make sure that the connectors are attached firmly.

Table 25. Removal steps of audio FPC and audio sub card (continued)

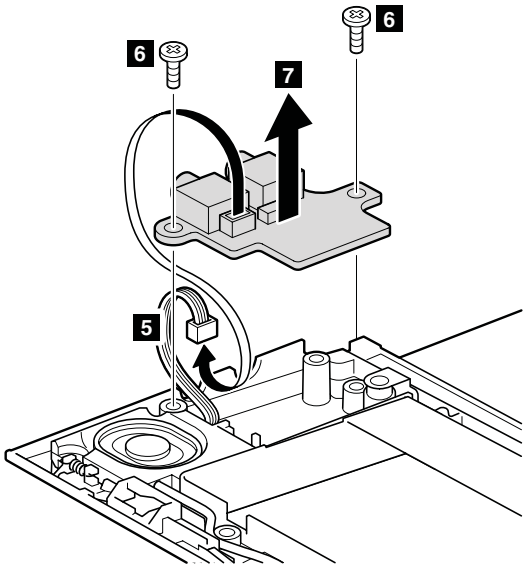

Step	Screw (quantity)	Color	Torque
6	M2 × 4 mm, bind-head, nylon-coated (2)	Black	0.167 Nm (1.7 kgfcm)

When installing: Make sure that the connector is attached firmly.

1150 Speaker assembly

For access, remove these FRUs in order:

- "1010 Battery pack" on page 61
- "1020 Second battery or travel cover (some models)" on page 62
- "1050 PCI Express Mini Card for wireless LAN" on page 67
- "1060 Wireless USB adapter" on page 70
- "1070 Keyboard" on page 73
- "1100 PCI Express Mini Card for wireless WAN" on page 79
- "1110 Palm rest or palm rest with fingerprint reader" on page 81
- "1130 Keyboard bezel" on page 85
- "1140 Audio FPC and audio sub card" on page 88

Table 26. Removal steps of speaker assembly

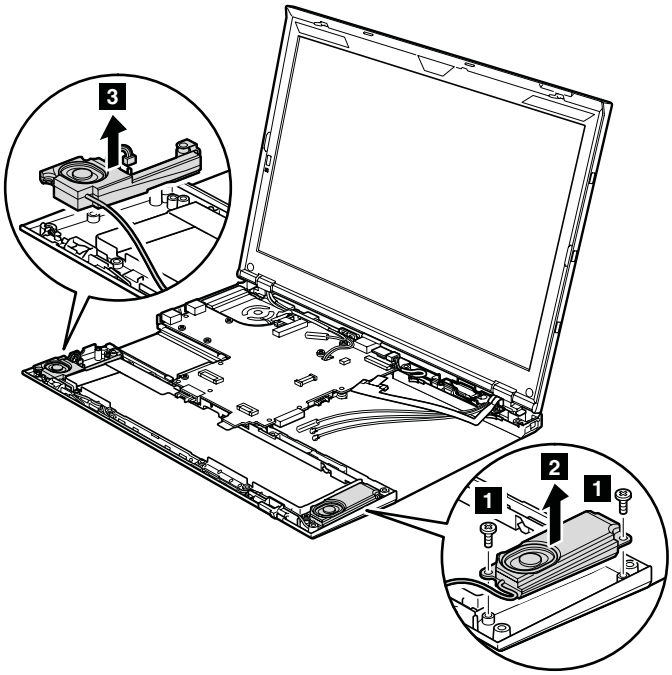

Step	Screw (quantity)	Color	Torque
1	M2 × 4 mm, bind-head, nylon-coated (2)	Black	0.167 Nm (1.7 kgfcm)

When installing: Make sure that the speaker connector is attached firmly, and the cables are routed as in this figure.

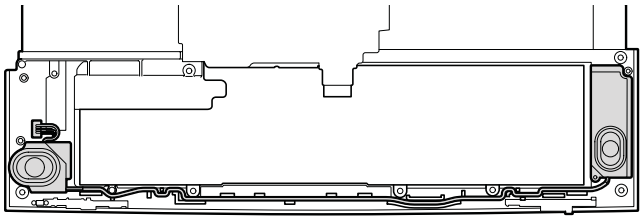

1160 LCD assembly

For access, remove these FRUs in order:

- "1010 Battery pack" on page 61
- "1020 Second battery or travel cover (some models)" on page 62
- "1050 PCI Express Mini Card for wireless LAN" on page 67
- "1060 Wireless USB adapter" on page 70
- "1070 Keyboard" on page 73
- "1100 PCI Express Mini Card for wireless WAN" on page 79
- "1110 Palm rest or palm rest with fingerprint reader" on page 81
- "1130 Keyboard bezel" on page 85

Table 27. Removal steps of LCD assembly

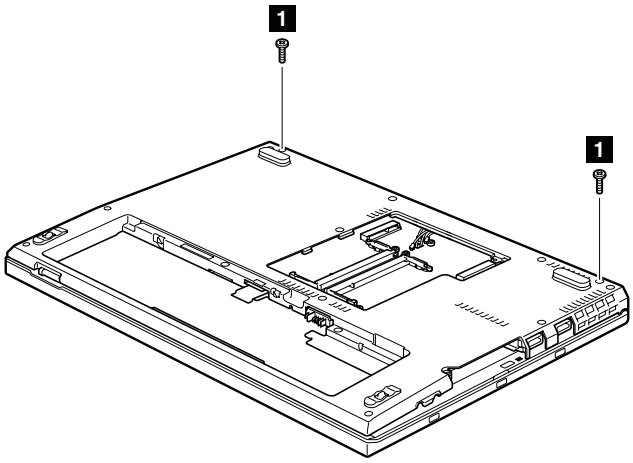

Step	Screw (quantity)	Color	Torque
1	M2 × 6 mm, bind-head, nylon-coated (2)	Black	0.167 Nm (1.7 kgfcm)

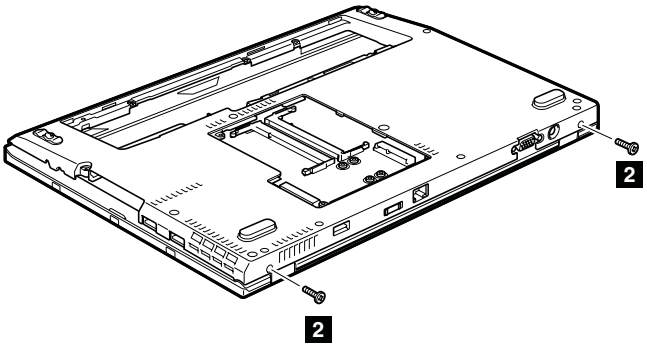

Step	Screw (quantity)	Color	Torque
2	M2 × 6 mm, bind-head, nylon-coated (2)	Black	0.167 Nm (1.7 kgfcm)

Table 27. Removal steps of LCD assembly (continued)

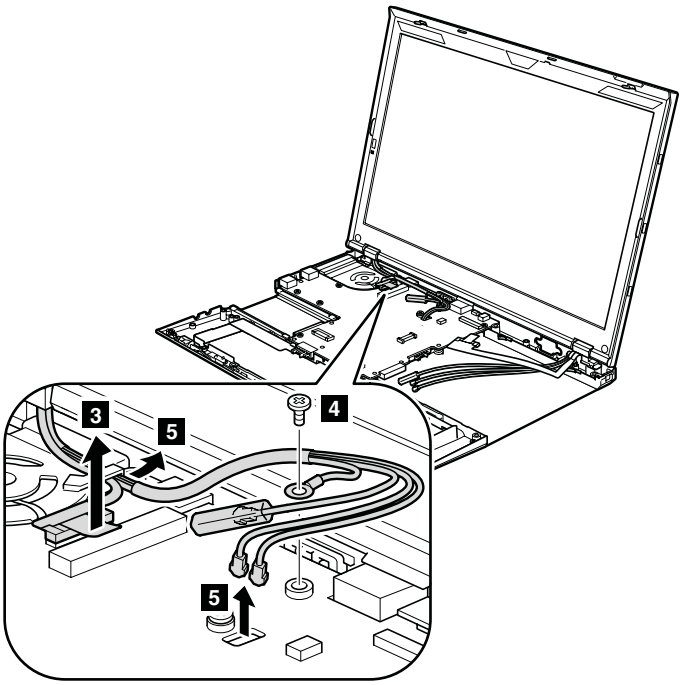

Step	Screw (quantity)	Color	Torque
4	M2 × 3 mm, small-head, nylon-coated (1)	Silver	0.167 Nm (1.7 kgfcm)

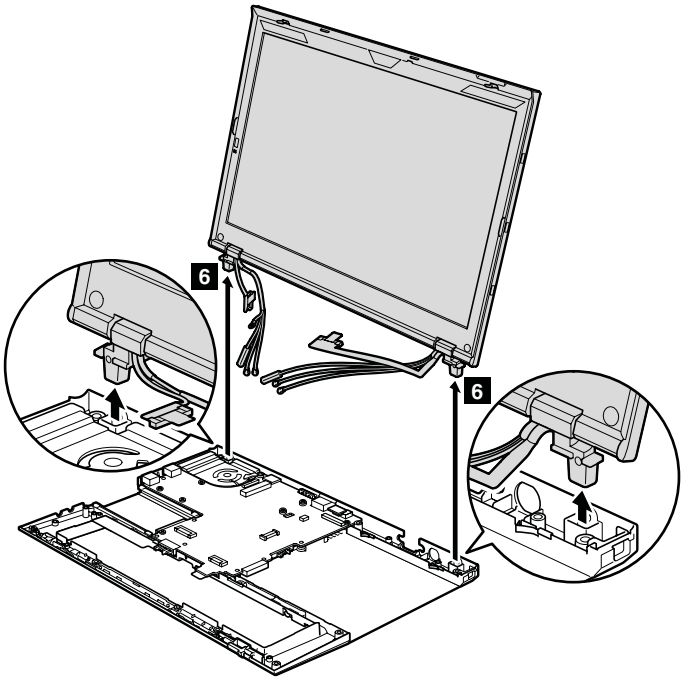

Table 27. Removal steps of LCD assembly (continued)

When installing:

1. When you route the cables, make sure that they are not subjected to any tension. Tension could cause the cables to be damaged by the cable guides, or a wire to be broken.
2. Make sure that the LCD connector is attached firmly.

1170 VGA cable and DC-in connector

For access, remove these FRUs in order:

- "1010 Battery pack" on page 61
- "1020 Second battery or travel cover (some models)" on page 62
- "1050 PCI Express Mini Card for wireless LAN" on page 67
- "1060 Wireless USB adapter" on page 70
- "1070 Keyboard" on page 73
- "1100 PCI Express Mini Card for wireless WAN" on page 79
- "1110 Palm rest or palm rest with fingerprint reader" on page 81
- "1130 Keyboard bezel" on page 85
- "1160 LCD assembly" on page 91

Table 28. Removal steps of VGA cable and DC-in connector

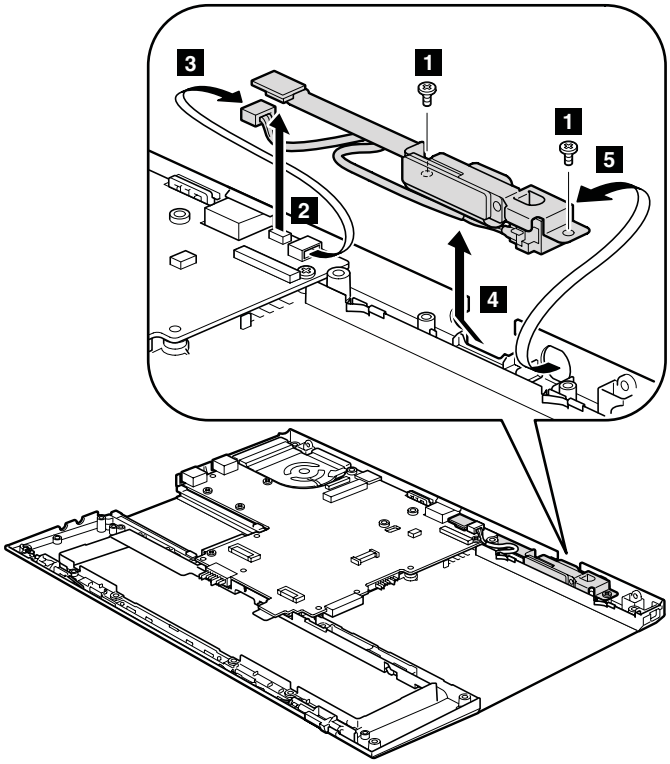

Step	Screw (quantity)	Color	Torque
1	M2 × 3 mm, small-head, nylon-coated (2)	Silver	0.167 Nm (1.7 kgfcm)

When installing: Make sure that the connectors are attached firmly.

Table 28. Removal steps of VGA cable and DC-in connector (continued)

In step **6**, detach the DC-in connector from the I/O bracket (**a**), then detach the VGA cable from the bracket **7**.

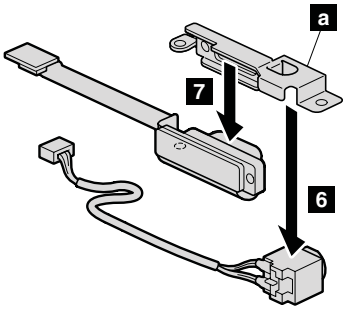

1180 System board, fan, and base cover assembly

Important notices for handling the system board:
When handling the system board, bear the following in mind.

- The system board has an accelerometer, which can be broken by applying several thousands of G-forces.

  Note: Dropping a system board from a height of as little as 6 inches so that it falls flat on a hard bench can subject the accelerometer to as much as 6,000 G's of shock.
- Be careful not to drop the system board on a bench top that has a hard surface, such as metal, wood, or composite.
- If a system board is dropped, you must test it, using PC-Doctor for DOS, to make sure that the HDD Active Protection still functions (see below).

  Note: If the test shows that HDD Active Protection is not functioning, be sure to document the drop in any reject report, and replace the system board.
- Avoid rough handling of any kind.
- At every point in the process, be sure not to drop or stack the system board.
- If you put a system board down, be sure to put it only on a padded surface such as an ESD mat or conductive corrugated material.

After replacing the system board, run PC-Doctor for DOS to make sure that HDD Active Protection still functions. The procedure is as follows:

1. Place the computer on a horizontal surface.
2. Run **Diagnostics** --> **ThinkPad Devices** --> **HDD Active Protection Test**.

   Attention:: Do not apply physical shock to the computer while the test is running.

For access, remove these FRUs, in order:

- "1010 Battery pack" on page 61
- "1020 Second battery or travel cover (some models)" on page 62
- "1050 PCI Express Mini Card for wireless LAN" on page 67
- "1060 Wireless USB adapter" on page 70
- "1070 Keyboard" on page 73
- "1110 Palm rest or palm rest with fingerprint reader" on page 81
- "1130 Keyboard bezel" on page 85
- "1160 LCD assembly" on page 91

Following components soldered on the top side of the system board are extremely sensitive. When you service the system board, avoid any kind of rough handling.

- **a** Security chip
- **b** Accelerometer chip for the HDD Active Protection System™
- **c** ICH (I/O Controller Hub)
- **d** GMCH (Integrated video chip)
- **e** CPU

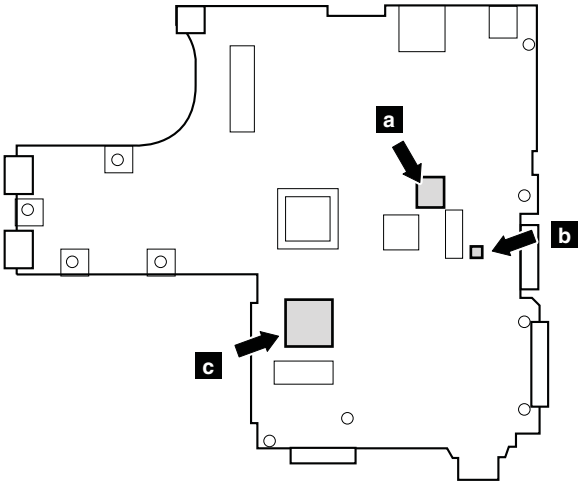

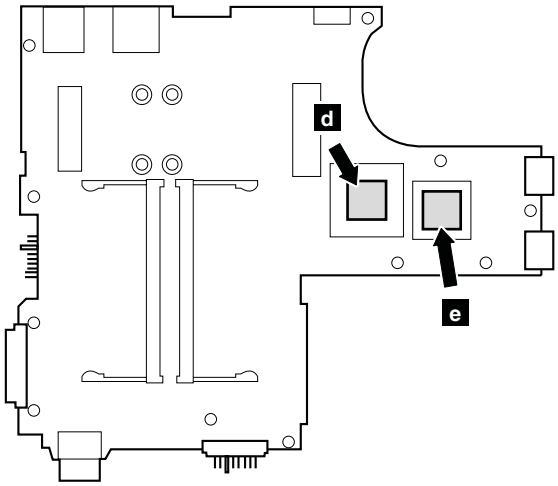

Table 29. Removal steps of system board, fan assembly, and base cover assembly

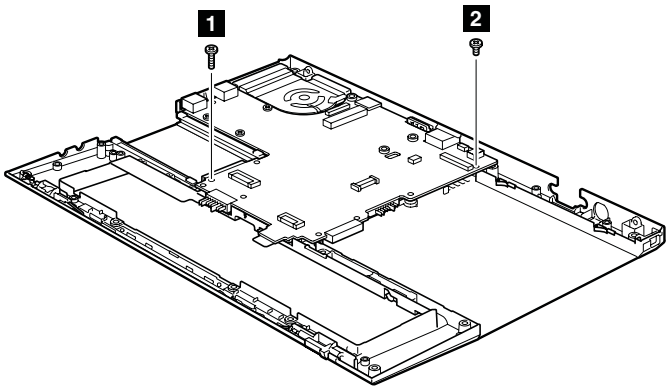

Step	Screw (quantity)	Color	Torque
1	M2 × 6 mm, bind-head, nylon-coated (1)	Black	0.167 Nm (1.7 kgfcm)
2	M2 × 3 mm, small-head, nylon-coated (1)	Silver	0.167 Nm (1.7 kgfcm)

In step 3, remove the system board and fan assembly together from the base cover assembly.

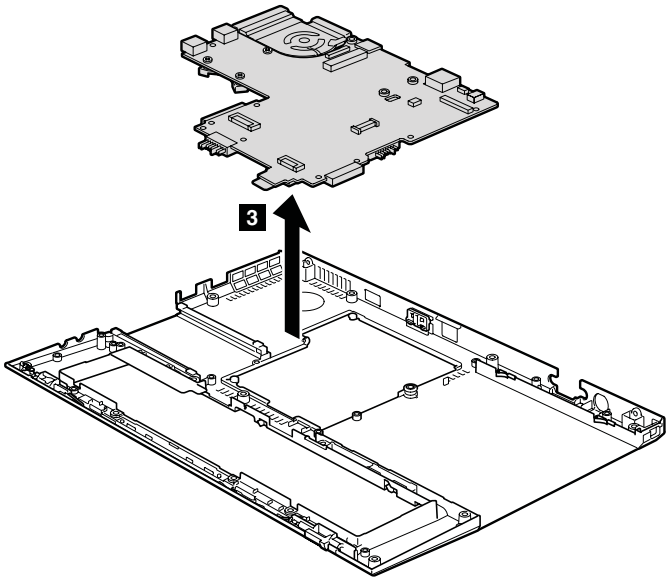

Table 29. Removal steps of system board, fan assembly, and base cover assembly (continued)

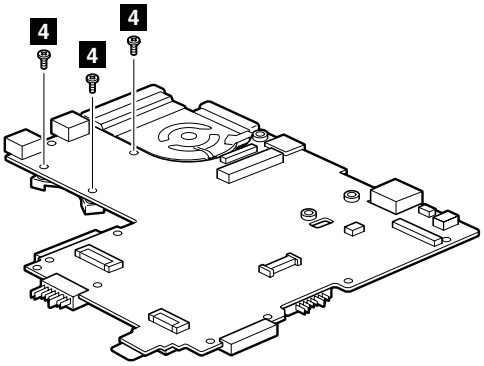

Step	Screw (quantity)	Color	Torque
4	M2 × 4 mm, bind-head, nylon-coated (3)	Black	0.167 Nm (1.7 kgfcm)

Turn the system board over, and then disconnect the fan assembly from the system board.

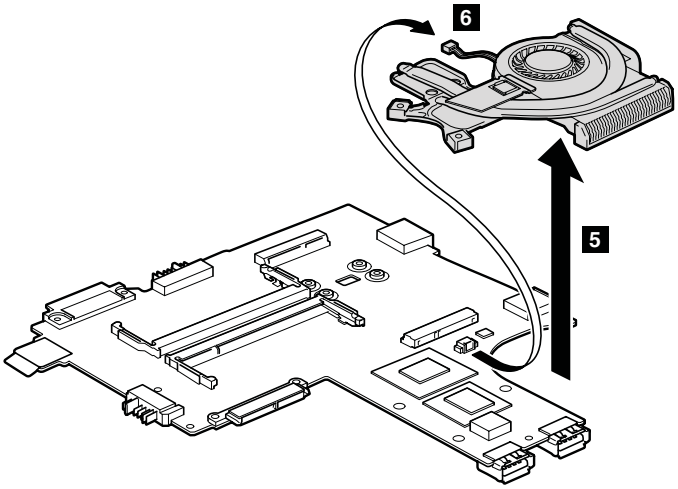

When installing: Make sure that the fan connector is attached to the system board firmly.

Table 30. Application of the thermal grease

When installing: Before you attach the fan assembly to the computer, apply thermal grease, at an amount of 0.2 grams, on the part marked **a** as in the following figure. Either too much or too less application of grease can cause a thermal problem due to imperfect contact with a component.

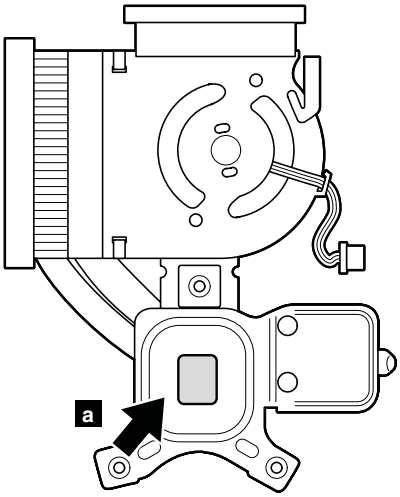

Note: Applying labels to the base cover
The new base cover FRU is shipped with a kit containing labels of several kinds. When you replace the base cover, you need to apply the following labels:

13 Product label
11 Homologation label

Following labels need to be peeled off from the old base cover, and need to be put on the new base cover.

1 SIRM label
2 China modem label
3 Wireless WAN LMA label
4 Israel label
5 Windows license label (COA)
6 Blind sheet A
7 Information label
8 Wireless WAN IMEI label or wireless WAN ESN label
9 Wireless WAN MAC address label
10 MAC address label
12 Serial number label
14 SIM ICCID label

For some models, you also need to apply one or two FCC labels. Check the old base cover; if it has one or two FCC labels, find duplicates of them in the label kit and apply them to the new base cover.

For the location of each label, refer the following figure:

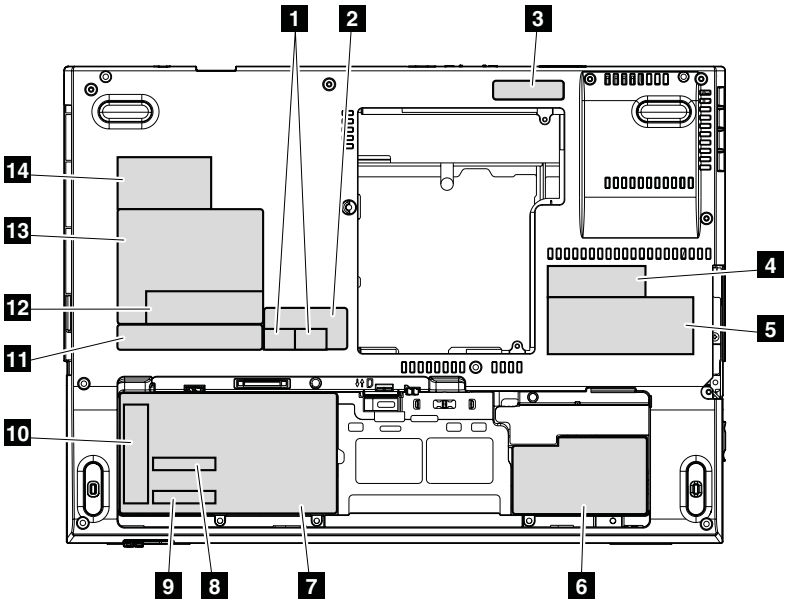

2010 LCD bezel assembly

For access, remove these FRUs in order:
- "1010 Battery pack" on page 61
- "1020 Second battery or travel cover (some models)" on page 62

Table 31. Removal steps of LCD bezel assembly

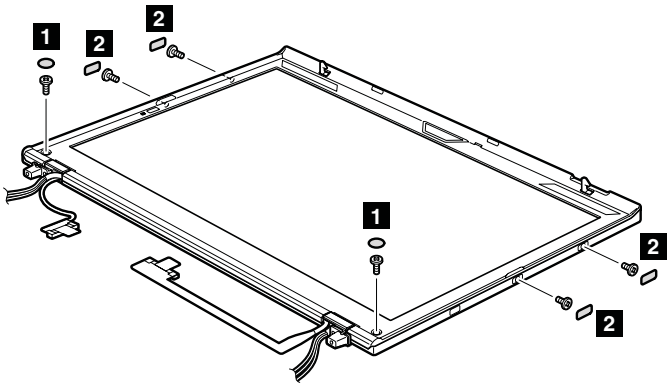

Step	Screw cap	Screw (quantity)	Color	Torque
1	○	M2 × 4 mm, small-head, nylon-coated (2)	Black	0.167 Nm (1.7 kgfcm)
2	▭	M2 × 3 mm, small-head, nylon-coated (4)	Silver	0.167 Nm (1.7 kgfcm)

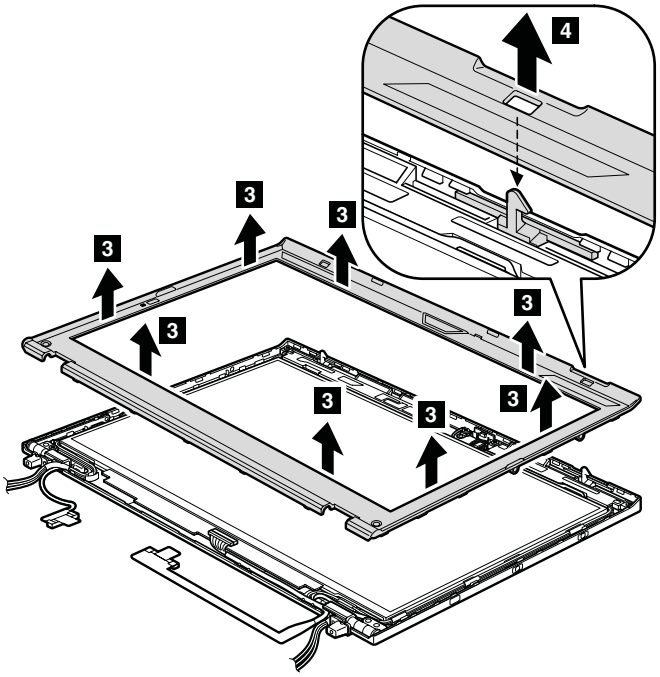

2020 LCD panel and LCD cable

For access, remove these FRUs, in order:

- "1010 Battery pack" on page 61
- "1020 Second battery or travel cover (some models)" on page 62
- "1050 PCI Express Mini Card for wireless LAN" on page 67
- "1060 Wireless USB adapter" on page 70
- "1070 Keyboard" on page 73
- "1100 PCI Express Mini Card for wireless WAN" on page 79
- "1110 Palm rest or palm rest with fingerprint reader" on page 81
- "1130 Keyboard bezel" on page 85
- "1160 LCD assembly" on page 91

Important notice on handling the LCD panel:
The LCD panel and the peripheral parts used in this product are very sensitive. Improper handling of the LCD panel can cause damage to the parts, and may cause a system malfunction such as a missing dot, missing line, or pixel problems.

- DO NOT apply any kind of pressure to the LCD panel.
- When you lift the LCD panel, always hold the left and right edges of the panel with both of your hands. DO NOT hold the panel with one hand or hold the top and bottom edges of the panel.
- DO NOT touch or apply any kind of pressure to the S-driver (**a**) and the print circuit board (**b**).

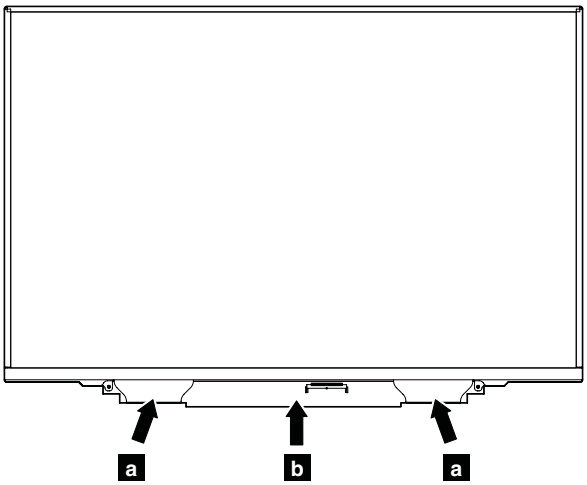

Table 32. Removal steps of LCD panel and LCD cable

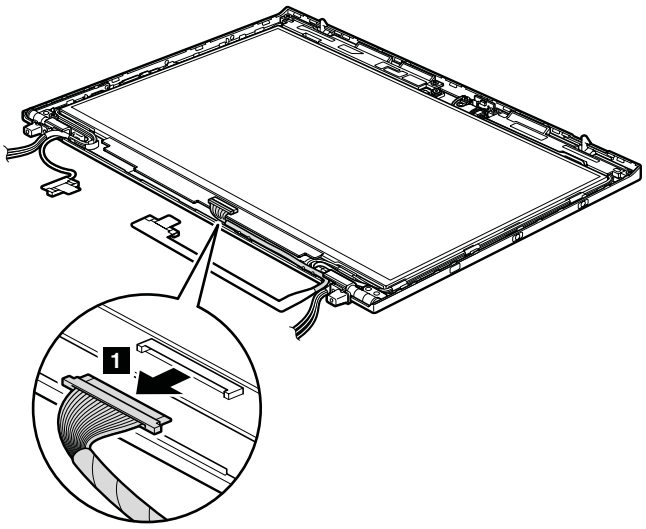

Attention: Unplug the LCD cable with holding the left and right edges of the connector with your fingers, and gently pull the connector toward you. DO NOT unplug it with pulling the cable. Applying tension could cause the cable to be damaged or a wire to be broken, and it might cause the S-driver to be damaged.

When installing:

- Place the LCD panel on a soft and clean sheet spread on a flat table, and plug the cable by pushing the left and right edges of the connector little by little with your fingers.
- DO NOT work by lifting the LCD panel.
- DO NOT plug the cable with one hand.

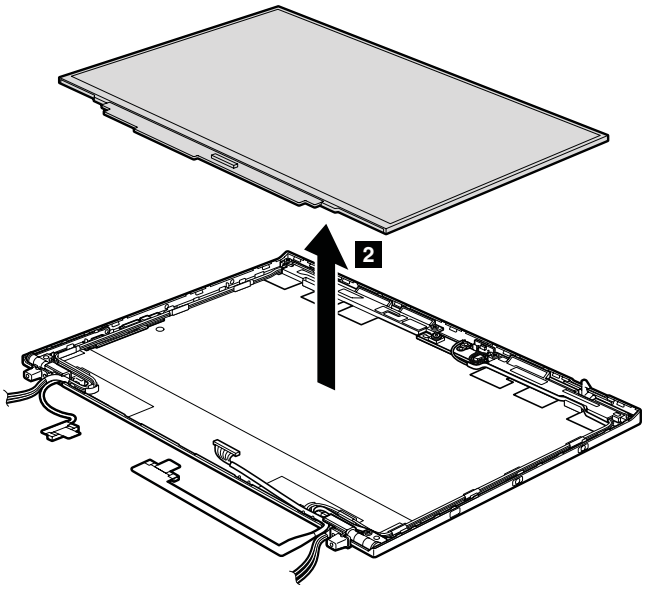

When installing: When attaching the LCD panel to the cover, press the left and right edges covered with metal gently with your fingers. DO NOT press the surface of the panel or apply any excessive force to the panel.

Table 32. Removal steps of LCD panel and LCD cable (continued)

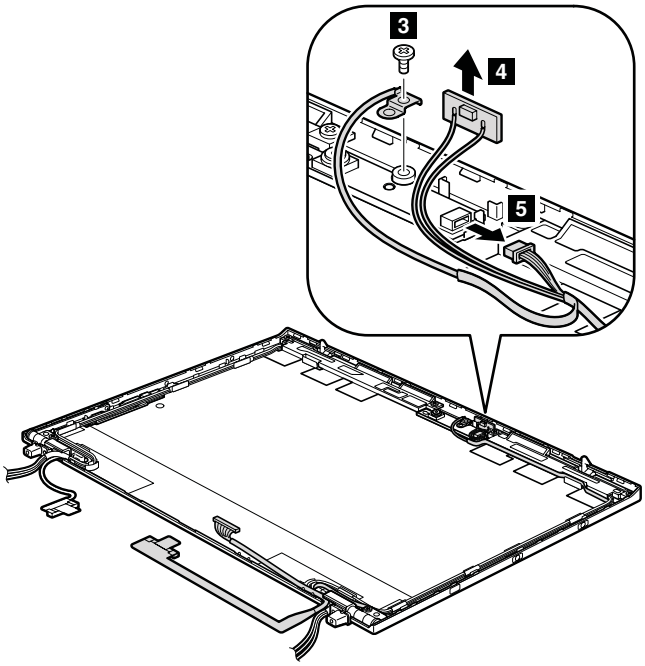

Step	Screw (quantity)	Color	Torque
3	M2 × 3 mm, small-head, nylon-coated (1)	Silver	0.167 Nm (1.7 kgfcm)

When installing: Make sure that the connector is attached firmly.

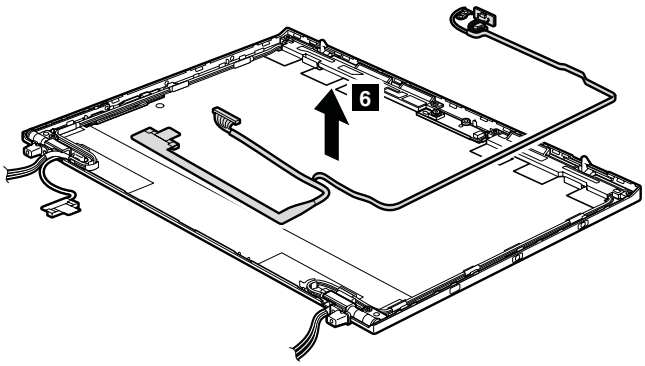

Table 32. Removal steps of LCD panel and LCD cable (continued)

Cable routing: When you install the LCD cable, route the cable as shown in this figure.

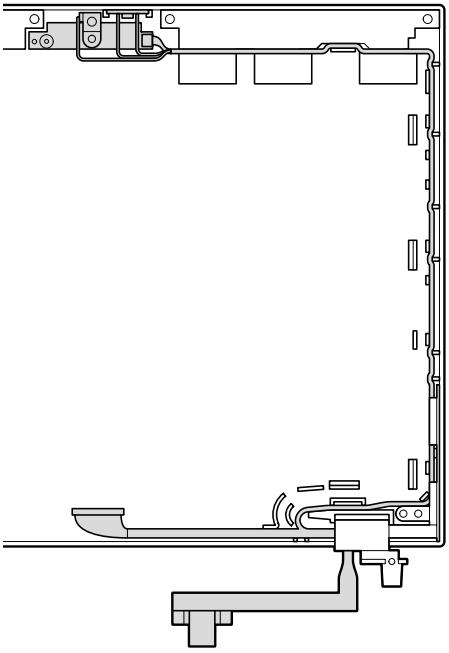

2030 Integrated camera

For access, remove these FRUs, in order:

- "1010 Battery pack" on page 61
- "1020 Second battery or travel cover (some models)" on page 62
- "1050 PCI Express Mini Card for wireless LAN" on page 67
- "1060 Wireless USB adapter" on page 70
- "1070 Keyboard" on page 73
- "1100 PCI Express Mini Card for wireless WAN" on page 79
- "1110 Palm rest or palm rest with fingerprint reader" on page 81
- "1130 Keyboard bezel" on page 85
- "1160 LCD assembly" on page 91
- "2010 LCD bezel assembly" on page 102
- "2020 LCD panel and LCD cable" on page 103

Table 33. Removal steps of camera module

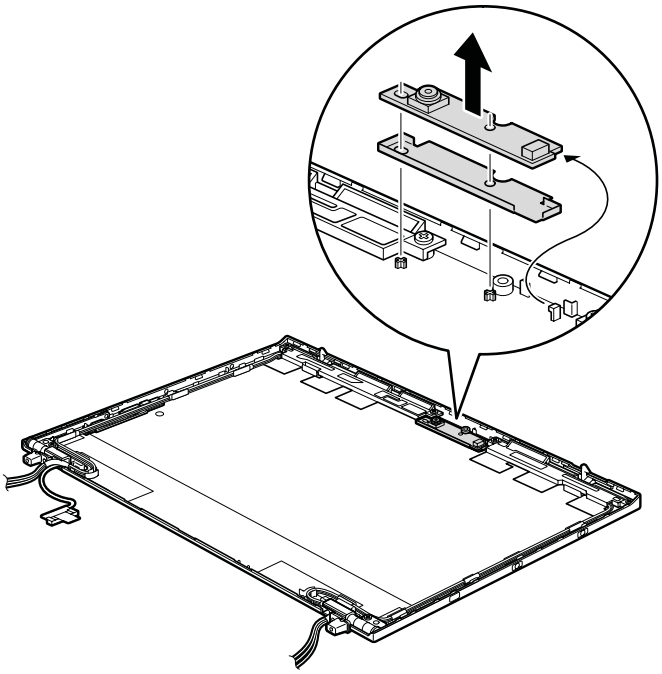

2040 Antenna assembly

For access, remove these FRUs in order:

- "1010 Battery pack" on page 61
- "1020 Second battery or travel cover (some models)" on page 62
- "1050 PCI Express Mini Card for wireless LAN" on page 67
- "1060 Wireless USB adapter" on page 70
- "1070 Keyboard" on page 73
- "1100 PCI Express Mini Card for wireless WAN" on page 79
- "1110 Palm rest or palm rest with fingerprint reader" on page 81
- "1130 Keyboard bezel" on page 85
- "1160 LCD assembly" on page 91
- "2010 LCD bezel assembly" on page 102
- "2020 LCD panel and LCD cable" on page 103

Table 34. Removal steps of antenna assembly

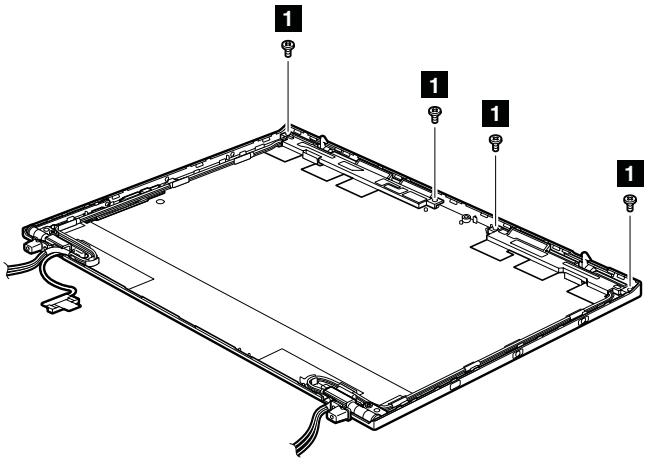

Step	Screw (quantity)	Color	Torque
1	M2 × 3 mm, small-head, nylon-coated (4)	Silver	0.167 Nm (1.7 kgfcm)

When installing: As you route the cables, make sure that they are not subjected to any tension. Tension could cause the cables to be damaged by the cable guides, or a wire to be broken.

Table 34. Removal steps of antenna assembly (continued)

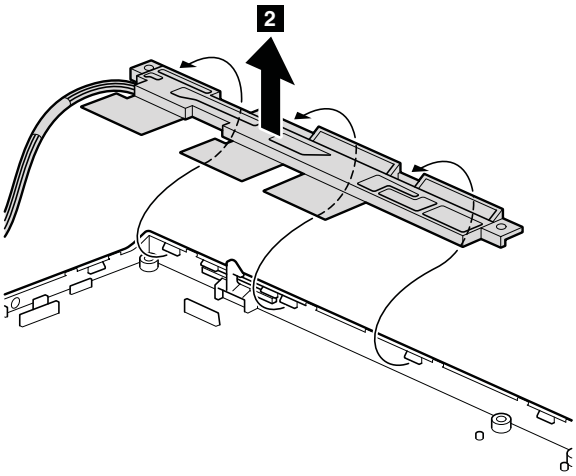

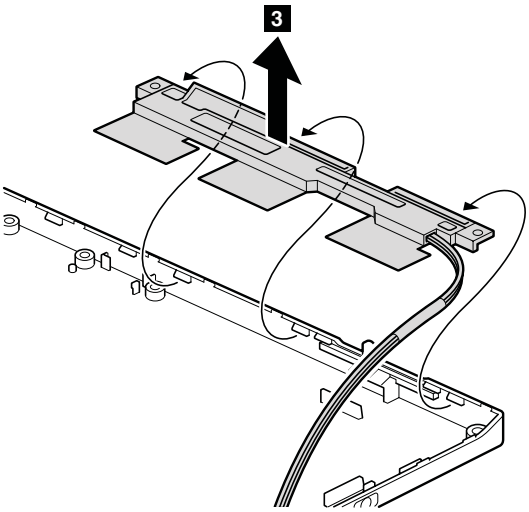

Table 34. Removal steps of antenna assembly (continued)

Cable routing: When you install the antenna assembly, route the cables as shown in this figure.

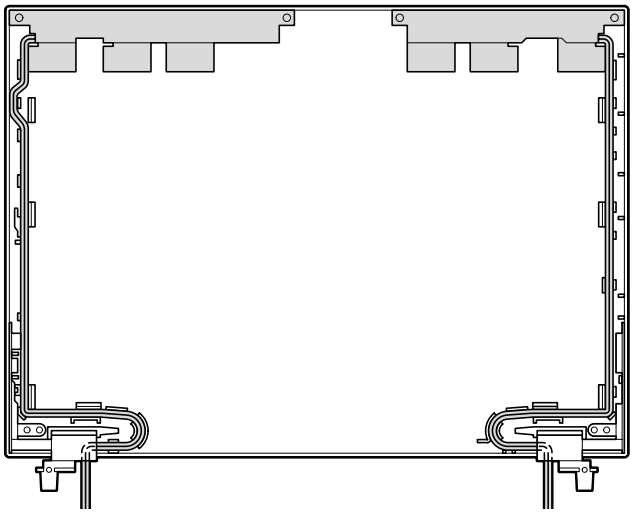

2050 Hinge L and hinge R

For access, remove these FRUs in order:

- "1010 Battery pack" on page 61
- "1020 Second battery or travel cover (some models)" on page 62
- "1050 PCI Express Mini Card for wireless LAN" on page 67
- "1060 Wireless USB adapter" on page 70
- "1070 Keyboard" on page 73
- "1100 PCI Express Mini Card for wireless WAN" on page 79
- "1110 Palm rest or palm rest with fingerprint reader" on page 81
- "1130 Keyboard bezel" on page 85
- "1160 LCD assembly" on page 91
- "2010 LCD bezel assembly" on page 102
- "2020 LCD panel and LCD cable" on page 103
- "2030 Integrated camera" on page 107
- "2040 Antenna assembly" on page 108

Table 35. Removal steps of hinge L and hinge R

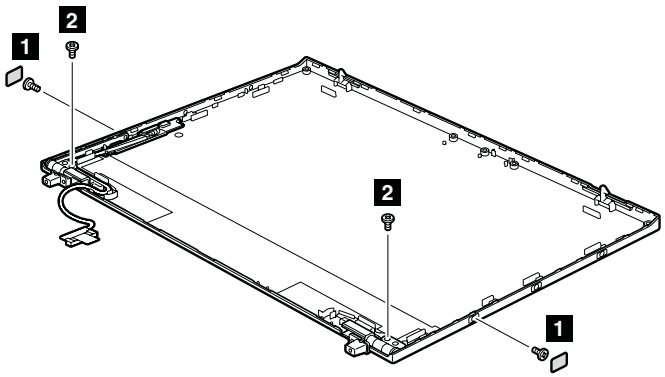

Step	Screw cap	Screw (quantity)	Color	Torque
1		M2 × 3 mm, small-head, nylon-coated (2)	Silver	0.167 Nm (1.7 kgfcm)
2	—	M2 × 3 mm, small-head, nylon-coated (2)	Silver	0.167 Nm (1.7 kgfcm)

Table 35. Removal steps of hinge L and hinge R (continued)

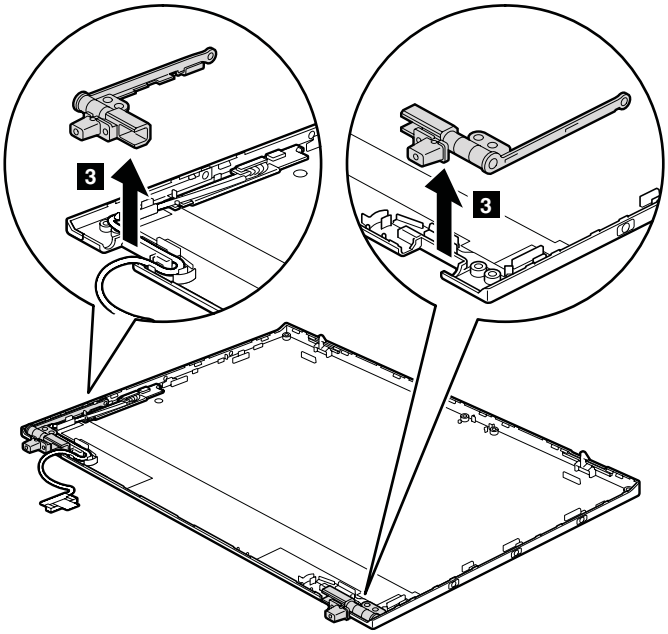

2060 LED sub card, LED cable and LCD cover assembly

For access, remove these FRUs in order:

- "1010 Battery pack" on page 61
- "1020 Second battery or travel cover (some models)" on page 62
- "1050 PCI Express Mini Card for wireless LAN" on page 67
- "1060 Wireless USB adapter" on page 70
- "1070 Keyboard" on page 73
- "1100 PCI Express Mini Card for wireless WAN" on page 79
- "1110 Palm rest or palm rest with fingerprint reader" on page 81
- "1130 Keyboard bezel" on page 85
- "1160 LCD assembly" on page 91
- "2010 LCD bezel assembly" on page 102
- "2020 LCD panel and LCD cable" on page 103
- "2030 Integrated camera" on page 107
- "2040 Antenna assembly" on page 108
- "2050 Hinge L and hinge R" on page 111

Table 36. Removal steps of LED sub card, LED cable, and LCD cover assembly

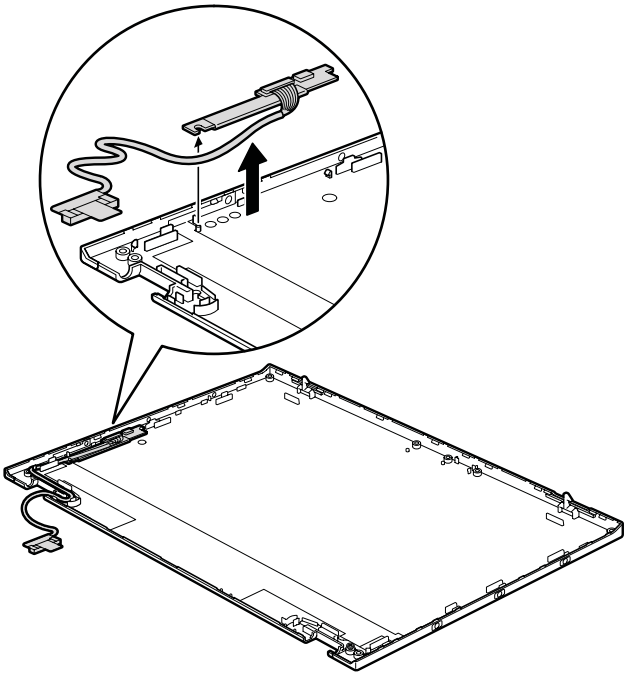

Table 36. Removal steps of LED sub card, LED cable, and LCD cover assembly (continued)

Cable routing: When you install the microphone module, route the cable as shown in this figure.

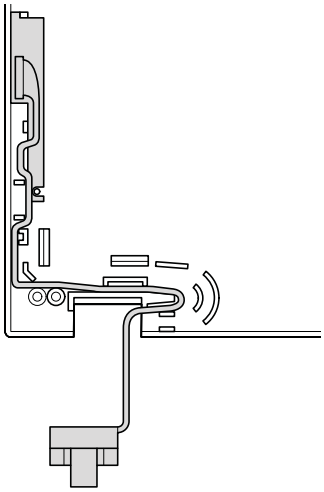

Locations

Front view

1 Integrated camera
2 ThinkLight
3 Status indicators
Note: For the description of each indicator, see “Status indicators” on page 49.
4 Power switch
5 Security keyhole
6 Optical drive or second battery or travel cover
7 Stereo speakers
8 Fingerprint reader (for some models)
9 TrackPoint pointing stick
10 TrackPoint buttons
11 Touch pad buttons
12 Touch pad
13 UltraNav
14 Volume control buttons
15 ThinkVantage button
16 Built-in microphone

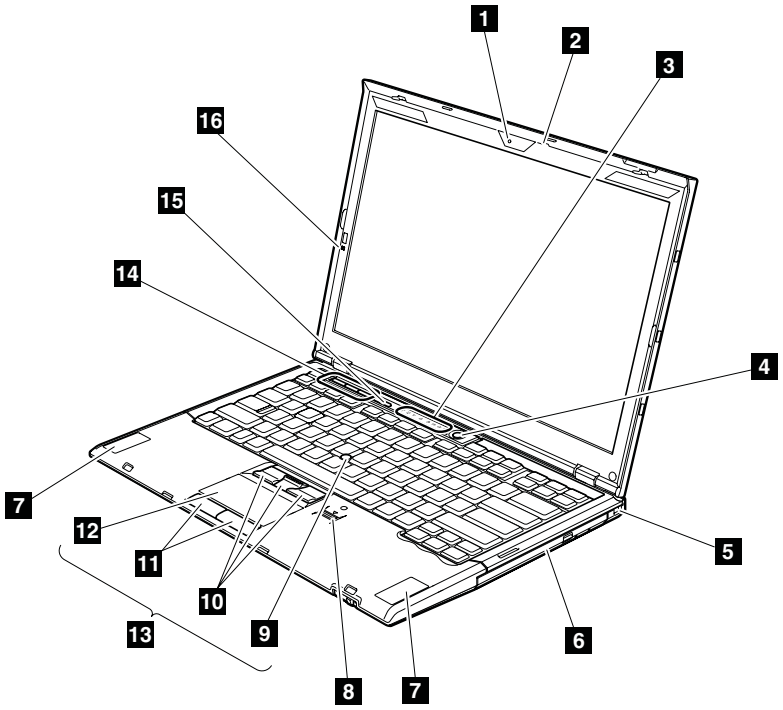

Rear view

1. Status indicators
   Note: For the description of each indicator, see “Status indicators” on page 49.
2. Stereo headphone jack
3. Microphone jack
4. Solid state drive (SSD)
5. Universal serial bus (USB) connectors
6. USB connector
7. Wireless radio switch
8. RJ-45 (Ethernet) connector
9. External monitor connector
10. AC power connector

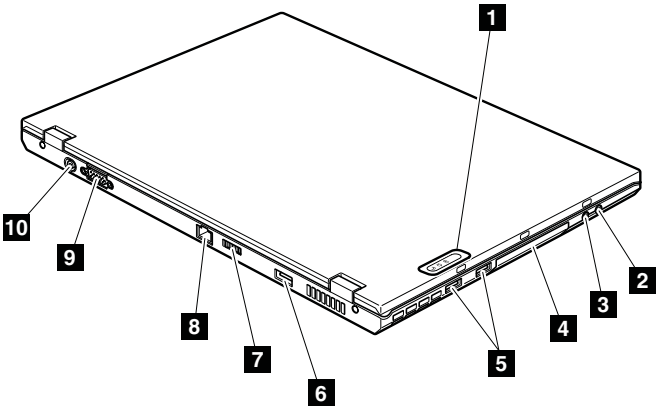

Bottom view

1. Expansion slot (DIMM, wireless USB card, and PCI Express Mini Card for wireless LAN)
2. Solid state drive
3. Battery pack latch
4. Battery pack
5. Battery pack release lever
6. LCD cover latch

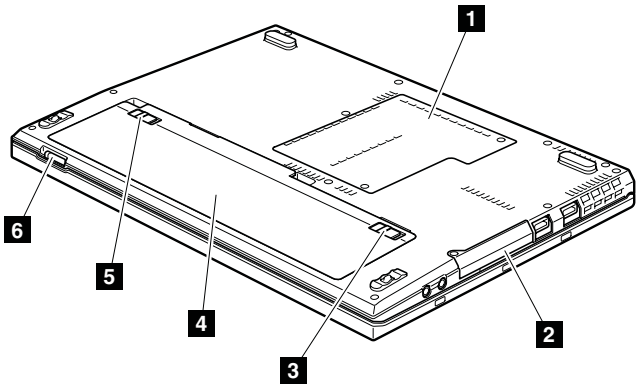

Parts list

This section contains following lists of the service parts.

- "Overall" on page 118
- "LCD FRUs" on page 123
- "Keyboard" on page 125
- "Miscellaneous parts" on page 126
- "AC adapters" on page 128
- "Power cords" on page 129
- "Recovery discs" on page 130
- "Common service tools" on page 133

Notes:

- Each FRU is available for all types or models, unless specific types or models are specified.
- FRU with specific models listed and described as xxU (where U is an example of a country designator) should be used for all models ending in U.
- FRU with specific models listed and described as 3Dx (where 3D is an example of a unique configuration) should be used for all of these models, unless specific country or region designator is specified.
- A CRU (customer replaceable unit) is identified by a single asterisk (*) or two asterisks (**) in the CRU ID column. An N in the CRU ID column means the part is not a CRU. A single asterisk (*) means the part is an External CRU; two asterisks (**) means the part is an Internal CRU.

  ThinkPad computers contain the following types of the external CRUs:

  External CRUs (pluggable)
  These CRUs unplug from the computer. Examples of these types of CRUs include an ac adapter, an external keyboard, a mouse, a power cord, a port replicator, a USB device, and an external bay device adapter.

  External CRUs with latches
  These CRUs have a latch to help you to remove and replace the part. Examples of these types of CRUs include a battery pack, an Ultrabay device such as an optical drive, a hard disk drive, and an extended battery.

  ThinkPad computers contain the following types of the internal CRUs:

  Internal CRUs (located behind an access panel)
  These CRUs are isolated parts within the computer that are concealed by an access panel that is typically secured by either one or two screws. Once the access panel is removed, only the specific CRU is visible. Examples of these types of CRUs include a memory card and a hard disk drive.

  Internal CRUs (located within the product itself)
  These CRUs are accessible only by opening the outer case of the computer. Examples of these CRUs include the integrated keyboard parts beneath the integrated keyboard and parts beneath the palm rest.
- A RoHS compliant FRU is identified by an R. An N in the RoHS ID column means the part is not a RoHS compliant FRU.
- FRUs marked with **OP** are available as options.

Overall

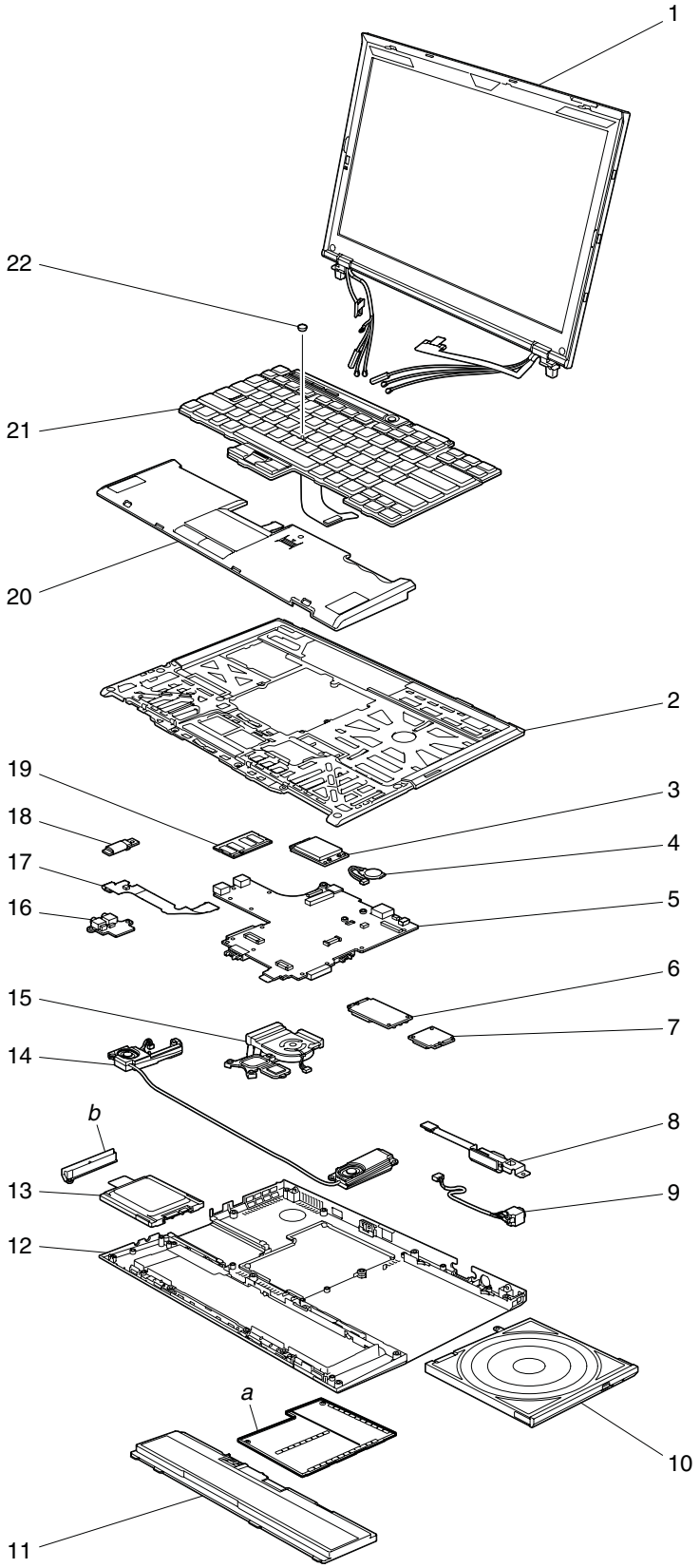

Table 37. Parts list—Overall

No.	FRU	FRU no.	RoHS ID	CRU ID
a, b	See "Miscellaneous parts" on page 126.			
1	LCD unit (see "LCD FRUs" on page 123.)			
2	Keyboard bezel assembly	42X5136	R	N
3	Sierra Wireless EV-DO Wireless WAN Mini PCI Express Adapter • 2748-CTO • 2749-CTO • 4052-CTO • 4183-CTO • 6476-CTO • 6477-CTO, 1Zx • 6478-CTO, 1Jx, 1Vx	42T0929	R	**
3	Sierra Wireless MC8775 PCI Express MiniCard • 2748-CTO • 2749-CTO • 4052-CTO • 4183-CTO • 6476-CTO, • 6477-CTO, 18x, 1Ax, 1Rx • 6478-CTO, 15x			
	EMEA/ANZ (Vodafone)	42T0931	R	**
	US (Cingular)	42T0933	R	**
3	Intel Turbo Memory, 1GB • 2748-CTO • 2749-CTO • 4052-CTO • 4183-CTO • 6476-CTO, 14x • 6477-CTO • 6478-CTO	42T0907	R	**
4	Backup battery	42T4524	R	**
5	System board assembly, Intel GS965 SFF	42W7871	R	N
6	Intel Wireless WiFi Link 4965AGN • 2748-CTO • 2749-CTO • 4052-CTO, 1Tx • 4183-CTO • 6476-CTO, 11x, 12x, 14x • 6477-CTO, 17x, 18x, 19x, 1Ax, 1Dx, 1Fx, 1Gx, 1Px, 1Rx, 1Tx, 1Ux, 1Zx • 6478-CTO, 14x, 15x, 16x, 18x, 1Hx, 1Jx, 1Tx, 1Vx, 1Yx			
	xxA, xxB, xxF, xxH, xxL, xxM, xxP, xxQ, xxS, xxU, xxV, xxY	42T0865	R	**
	xxG	42T0867	R	**
	xxC	42T0869	R	**
	xxE, xxJ	42T0871	R	**
	xxK	42T0905	R	**

Table 37. Parts list—Overall (continued)

No.	FRU	FRU no.	RoHS ID	CRU ID
6	Intel Wireless WiFi Link 4965AGN (11n disabled) • 2748-CTO • 2749-CTO • 4052-CTO • 4183-CTO • 6476-CTO, 23x • 6477-CTO, 1Cx, 1Ex • 6478-CTO			
	xxA, xxB, xxF, xxH, xxL, xxM, xxP, xxQ, xxS, xxU, xxV, xxY	42T0873	R	**
	xxG	42T0875	R	**
	xxC, xxK	42T0877	R	**
	xxE, xxJ	42T0879	R	**
7	Wireless USB adapter • 2748-CTO • 2749-CTO • 4052-CTO • 4183-CTO • 6476-CTO • 6477-CTO, 1Zx • 6478-CTO, 1Jx			
	US	42T0971	R	**
	Japan	42T0973	R	N
8	VGA cable	44C4046	R	N
9	DC-in cable	44C4045	R	N
10	DVD-RW/CD-RW combo drive • 2748-CTO • 2749-CTO • 4052-CTO, 1Tx • 4183-CTO • 6476-CTO, 12x, 14x • 6477-CTO, 17x, 19x, 1Ax, 1Ex, 1Fx, 1Gx, 1Rx, 1Tx, 1Ux, 1Zx • 6478-CTO, 14x, 15x, 16x, 18x, 1Hx, 1Jx, 1Tx, 1Vx, 1Yx	42T2509	R	**
10	Second battery, Li-Polymer (3 cell) • 2748-CTO • 2749-CTO • 4052-CTO • 4183-CTO • 6476-CTO • 6477-CTO, 18x, 1Dx, 1Px, 1Yx • 6478-CTO	42T4520	R	*
10	Travel cover • 2748-CTO • 2749-CTO • 4052-CTO • 4183-CTO • 6476-CTO, 11x • 6477-CTO, 1Cx, 23x • 6478-CTO	42X5137	R	*

Table 37. Parts list—Overall (continued)

No.	FRU	FRU no.	RoHS ID	CRU ID
11	Battery pack, Li-Polymer (3 cell) • 2748-CTO • 2749-CTO • 4052-CTO • 4183-CTO • 6476-CTO, 11x, 12x • 6477-CTO, 17x, 18x, 19x, 1Ax, 1Cx, 1Ex, 1Fx, 1Gx, 1Px, 1Rx, 1Yx, 21x, 22x, 23x, 24x, 27x • 6478-CTO, 16x, 18x, 1Hx, 1Tx, 1Yx	42T4518	R	*
11	Battery pack, Li-ion (6 cell) • 2748-CTO • 2749-CTO • 4052-CTO, 1Tx • 4183-CTO • 6476-CTO • 6477-CTO, 1Dx, 1Tx, 1Ux, 1Zx • 6478-CTO, 14x, 15x, 1Jx, 1Vx	42T4522	R	*
12	Base cover assembly for 2748	42W3481	R	N
12	Base cover assembly for 2749	42W3482	R	N
12	Base cover assembly for 4052	42W3483	R	N
12	Base cover assembly for 4183	42W3493	R	N
12	Base cover assembly for 6476	42W3478	R	N
12	Base cover assembly for 6477	42W3479	R	N
12	Base cover assembly for 6478	42W3480	R	N
13	SATA solid state drive assembly, 64 GB • 2748-CTO • 2749-CTO • 4052-CTO, 1Tx • 4183-CTO • 6476-CTO, 11x, 12x • 6477-CTO, 17x, 18x, 19x, 1Ax, 1Cx, 1Dx, 1Ex, 1Fx, 1Gx, 1Px, 1Rx, 1Tx, 1Ux, 1Zx • 6478-CTO, 14x, 15x, 16x, 18x, 1Hx, 1Jx, 1Tx, 1Vx, 1Yx	42T1898	R	**
14	Speaker assembly	42X4670	R	N
15	Fan	42X5067	R	N
16	Audio sub card	42W7899	R	N
17	Audio FPC	44C4047	R	N
18	Bluetooth daughter card (BDC-2)	39T0497	R	N
19	512-MB DDR2-667 SDRAM SO-DIMM (PC2-5300) card • 2748-CTO • 2749-CTO • 4052-CTO • 4183-CTO • 6476-CTO, 11x • 6477-CTO, 1Cx, 1Ex, 23x • 6478-CTO	40Y8402	R	**

Table 37. Parts list—Overall (continued)

No.	FRU	FRU no.	RoHS ID	CRU ID
19	1-GB DDR2-667 SDRAM SO-DIMM (PC2-5300) card • 2748-CTO • 2749-CTO • 4052-CTO • 4183-CTO • 6476-CTO, 12x, 14x • 6477-CTO, 17x, 18x, 19x, 1Ax, 1Dx, 1Fx, 1Gx, 1Px, 1Rx • 6478-CTO, 14x, 15x, 16x	40Y8403	R	**
19	2-GB DDR2-667 SDRAM SO-DIMM (PC2-5300) card • 2748-CTO • 2749-CTO • 4052-CTO, 1Tx • 4183-CTO • 6476-CTO • 6477-CTO, 1Tx, 1Ux, 1Zx • 6478-CTO, 18x, 19x, 1Hx, 1Jx, 1Tx, 1Vx, 1Yx	40Y8404	R	**
20	Palm rest assembly with fingerprint reader	42X5021	R	**
21	Keyboard (see “Keyboard” on page 125.)			
22	TrackPoint stick caps	91P9642	R	*
—	Thermal grease	91P8835	R	N
—	AC adapter (see “AC adapters” on page 128.)			

LCD FRUs

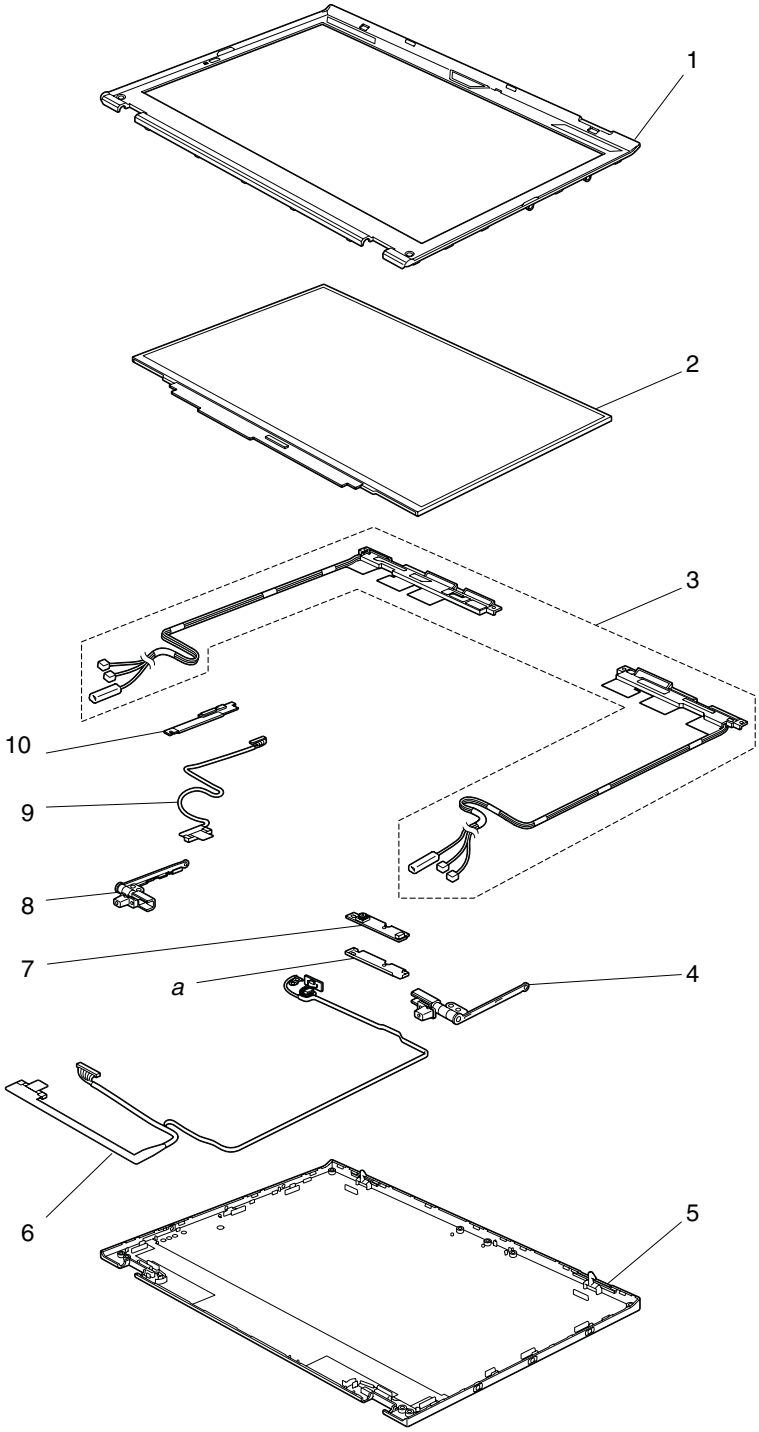

13.3-inch WXGA+ TFT

Table 38. Parts list—13.3-inch WXGA+ TFT

No.	FRU	FRU no.	RoHS ID	CRU ID
1	LCD bezel assembly	42X5133	R	N
2	LCD module, 13.3-inch WXGA+	42T0476	R	N

Table 38. Parts list—13.3-inch WXGA+ TFT (continued)

No.	FRU	FRU no.	RoHS ID	CRU ID
3	Antenna	44C4042	R	N
4	Hinge R	42X5134	R	N
5	LCD cover assembly	42X5132	R	N
6	LCD cable	44C4044	R	N
7	Integrated camera • 2748-CTO • 2749-CTO • 4052-CTO, 1Tx • 4183-CTO • 6476-CTO, 12x • 6477-CTO, 17x, 18x, 19x, 1Ax, 1Cx, 1Dx, 1Ex, 1Fx, 1Gx, 1Px, 1Rx, 1Tx, 1Ux, 1Zx • 6478-CTO, 14x, 15x, 16x, 18x, 1Hx, 1Jx	42T3564	R	N
8	Hinge L	42X5135	R	N
9	LED cable	44C4043	R	N
10	LED sub card	42W7898	R	N

Keyboard

Language	P/N	RoHS ID	CRU ID
Arabic	42T3615	R	**
Belgian	42T3612		
Brazilian Portuguese	42T3631		
Canadian French (058)	42T3602		
Canadian French (Acnor)	42T3601		
Czech	42T3620		
Danish	42T3609		
Dutch	42T3606		
Finnish, Swedish	42T3607		
French	42T3605		
German	42T3603		
Greek (U.S. English and Greek layout)	42T3622		
Hebrew	42T3617		
Hungarian	42T3621		
Icelandic	42T3632		
Italian	42T3610		
Japanese	42T3625		
Korean	42T3627		
Latin American Spanish	42T3628		
Norwegian	42T3608		
Polish	42T3618		
Portuguese	42T3614		
Russian	42T3616		
Slovak	42T3624		
Slovenian	42T3623		
Spanish	42T3611		
Swiss	42T3613		
Thai	42T3629		
Traditional Chinese	42T3626		
Turkish	42T3619		
U.K. English	42T3604		
U.S. English	42T3600		
U.S. English (International, with a Euro symbol)	42T3630		

Miscellaneous parts

Table 39. Parts list—Miscellaneous parts

FRU	P/N	RoHS ID	CRU ID
Screw kit (including nylon-coated screws): • M2 × 3 mm (silver), small head (35) • M2 × 4 mm (black), bind head (15) • M2 × 4 mm (black), small head (4) • M2 × 6 mm (black), bind head (25) • M2 × 3 mm tamper proof (4) • Shoulder screw M2 (4) • Hex stud (4) • Security screw M2 × 4 mm (2)	42X5129	R	N
Seal kit: • Tape for LCD cable (large) • Tape S (cable fix) • Tape L (cable fix) • Screw cap, thin • Screw cap square	42X5130	R	N
Base miscellaneous parts: • Rubber foot (front) • Rubber foot (rear) • LCD latch knob • LCD latch • Latch link wire • LCD latch spring • Wireless radio switch knob • Wireless radio switch latch • Security keyhole bracket • EMI spring (optical drive) • EMI spring (HDD front) • EMI spring (HDD rear) • Gasket (long) • Gasket (short) • HDD guide (front) • HDD rubber rail (front) • HDD guide (rear) • HDD rubber rail (rear) • LCD latch rubber • Pad, battery • Sponge (large) • Sponge (small) • Cap for Mg • Screw M2 × 3 • Base cover gasket (2)	42X5126	R	N

Table 39. Parts list—Miscellaneous parts (continued)

FRU	P/N	RoHS ID	CRU ID
Keyboard bezel miscellaneous parts: • Support plate, fan • USB bracket • Keyboard cover • EMI spring (rear right) • EMI spring (rear left) • EMI spring (front center) • Magnet • Tape for magnet • Gasket (FP) • Gasket (short) • Gasket (middle) • Spill sealing S • Spill sealing M • Spill sealing L • Screw M2 × 3 • Label information • Blind sheet R	42X5127	R	N
System miscellaneous parts: • *(a)* Expansion slot cover • *(b)* HDD cover • I/O sub bracket • Connector cap • Optical drive bracket **Note:** Italicized letters in parentheses are references to the exploded view in "Overall" on page 118.	42X5128	R	N
System board miscellaneous parts: • Mini Card stud, system board • Stud, system board • Insulation (top) • Insulation, black (battery) • Insulation, black (coil) • Insulation, black (SIM) • SIM card bracket • Eject sheet • USB gasket • Base cover gasket (2)	42X5125	R	N

Table 39. Parts list—Miscellaneous parts (continued)

FRU	P/N	RoHS ID	CRU ID
LCD miscellaneous parts: • *(a)* Heat spreader for camera • ThinkPad logo • Lenovo logo • Label (camera) • Label (no camera) • Label (LED) • Tape cable fix (10 × 38) • LCD latch R • LCD latch L • Rubber 0.5 • Rubber 0.8 • Rubber 0.8 long • Rubber 1.0 • Rubber 1.5 • Alpet sheet for LCD • Gasket for LCD • Screw cap, thin • Screw cap, square **Note:** Italicized letter in parentheses is reference to the exploded view in "LCD FRUs" on page 123.	42X5131	R	N
Gasket kit (for single): • Base cover gasket (3)	42W3491	R	N
Gasket kit (for large quantities): • Base cover gasket (200)	42W3492	R	N

AC adapters

Table 40. Parts list—2-pin AC adapters

FRU	P/N	RoHS ID	CRU ID
2-pin (65 W, 20 V) adapter (models CTO, xxE, xxF, xxJ, xxL, xxP, xxS, xxY, xxU)	42T5282	R	*
2-pin (65 W, 20 V) adapter (models CTO, xxE, xxF, xxJ, xxL, xxP, xxS, xxY, xxU)	92P1214		
2-pin (65 W, 20 V) adapter (models CTO, xxE, xxF, xxJ, xxL, xxP, xxS, xxY, xxU)	92P1159		

Table 41. Parts list—3-pin AC adapters

FRU	P/N	RoHS ID	CRU ID
3-pin (65W, 20 V) adapter (models CTO, xxA, xxB, xxC, xxG, xxH, xxK, xxM, xxT, xxV) OP	42T5283	R	*
3-pin (65W, 20 V) adapter (models CTO, xxA, xxB, xxC, xxG, xxH, xxK, xxM, xxT, xxV) OP	92P1212		
3-pin (65W, 20 V) adapter (models CTO, xxA, xxB, xxC, xxG, xxH, xxK, xxM, xxT, xxV) OP	92P1157		

Power cords

A ThinkPad power cord for a specific country or region is usually available only in that country or region:

Table 42. Parts list—2-pin power cords

Region	P/N		RoHS ID	CRU ID
Argentina • models -CTO, xxY	42T5020	42T5105	R	*
Brazil • models -CTO, xxP	42T5180	42T5183		
Canada, U.S. • models -CTO, xxF, xxL, xxS, xxU	42T5008	42T5093		
Japan • models -Exx, Jxx	42T5014	42T5099		

Table 43. Parts list—3-pin power cords

Region	P/N		RoHS ID	CRU ID
Australia, New Zealand • models -CTO, xxG, xxM	42T5050	42T5135	R	*
Bangladesh, Sri Lanka, South Africa • models -CTO, xxG	42T5056	42T5141		
Canada, U.S. • models -CTO, xxF, xxL, xxS, xxU	42T5004	42T5089		
China (P.R.C.) (other than Hong Kong S.A.R.) • models -xxC	42T5065	42T5150		
Denmark • models -CTO, xxG	42T5041	42T5126		
European countries • models -CTO, xxG	42T5029	42T5114		
India • models -CTO, xxG	42T5083	42T5168		
Israel • models -CTO, xxG	42T5062	42T5147		
Italy • models -CTO, xxG	42T5047	42T5132		
Korea • models -xxK	42T5077	42T5162		
Switzerland • models -CTO, xxG	42T5044	42T5129		
Taiwan • models -CTO, xxV	42T5071	42T5156		
U.K., China (Hong Kong S.A.R.) • models -CTO, xxB, xxG, xxH	42T5035	42T5120		

Recovery discs

Windows XP Professional DVDs

Windows XP Professional is preinstalled as the operating system in the following models:

- 2748-CTO
- 2749-CTO
- 4052-CTO
- 4183-CTO
- 6476-CTO
- 6477-CTO
- 6478-CTO, 1Tx, 1Vx

Table 44. Parts list—Windows XP Professional CDs

Language	P/N	RoHS ID	CRU ID
Arabic	44Y2701	R	*
Brazilian Portuguese	44Y2686		
Czech	44Y2698		
Danish	44Y2696		
Dutch	44Y2697		
English	44Y2680		
English (modem-disabled)	44Y2681		
Finnish	44Y2695		
French	44Y2683		
German	44Y2684		
Greek	44Y2705		
Hebrew	44Y2699		
Hungarian	44Y2704		
Italian	44Y2687		
Japanese	44Y2688		
Korean	44Y2692		
Norwegian	44Y2693		
Polish	44Y2700		
Russian	44Y2702		
Russian (English-enabled)	44Y2682		
Simplified Chinese	44Y2689		
Slovenian	44Y2706		
Spanish	44Y2685		
Swedish	44Y2694		
Traditional Chinese	44Y2690		
Traditional Chinese (Hong Kong S.A.R.)	44Y2691		
Turkish	44Y2703		

Windows Vista Business (32 bit) DVDs

Windows Vista Business (32 bit) is preinstalled as the operating system in the following models:

- 2748-CTO
- 2749-CTO
- 4052-CTO, 1Tx
- 4183-CTO
- 6476-CTO, 11x, 12x
- 6477-CTO, 17x, 18x, 19x, 1Ax, 1Cx, 1Dx, 1Ex, 1Gx, 1Px, 1Rx, 1Tx, 1Zx, 25x
- 6478-CTO, 14x, 15x, 16x, 18x, 1Hx, 1Jx

Table 45. Parts list—Windows Vista Business (32 bit) DVDs

Language	P/N	RoHS ID	CRU ID
Brazilian Portuguese	44Y3394	R	*
Czech	44Y3408		
Danish	44Y3404		
Dutch	44Y3407		
English	44Y3388		
English (modem-disabled)	44Y3389		
Finnish	44Y3403		
French	44Y3391		
German	44Y3392		
Greek	44Y3411		
Hebrew	44Y3395		
Hungarian	44Y3412		
Italian	44Y3396		
Japanese	44Y3397		
Korean	44Y3401		
Norwegian	44Y3405		
Polish	44Y3409		
Portuguese	44Y3413		
Romanian	44Y3415		
Russian	44Y3406		
Russian (English-enabled)	44Y3390		
Serbian-Latin	44Y3416		
Simplified Chinese	44Y3398		
Slovak	44Y3417		
Slovenian	44Y3414		
Spanish	44Y3393		
Swedish	44Y3402		
Traditional Chinese	44Y3399		
Traditional Chinese (Hong Kong S.A.R.)	44Y3400		
Turkish	44Y3410		

Windows Vista Ultimate (32 bit) DVDs

Windows Vista Ultimate (32 bit) is preinstalled as the operating system in the following models:

- 2748-CTO
- 2749-CTO
- 4052-CTO
- 4183-CTO
- 6476-CTO
- 6477-CTO, 1Fx, 1Lx
- 6478-CTO, 1Yx

Table 46. Parts list—Windows Vista Ultimate (32 bit) DVDs

Language	P/N	RoHS ID	CRU ID
Brazilian Portuguese	44Y3460	R	*
Czech	44Y3474		
Danish	44Y3470		
Dutch	44Y3473		
English	44Y3454		
English (modem-disabled)	44Y3455		
Finnish	44Y3469		
French	44Y3457		
German	42Y7943		
Greek	44Y3477		
Hebrew	44Y3461		
Hungarian	44Y3478		
Italian	44Y3462		
Japanese	44Y3463		
Korean	44Y3467		
Norwegian	44Y3471		
Polish	44Y3475		
Portuguese	44Y3479		
Russian	44Y3472		
Russian (English-enabled)	44Y3456		
Simplified Chinese	44Y3464		
Slovenian	44Y3480		
Spanish	44Y3459		
Swedish	44Y3468		
Traditional Chinese	44Y3465		
Traditional Chinese (Hong Kong S.A.R.)	44Y3466		
Turkish	44Y3476		

Common service tools

Table 47. Parts list—Common service tools

Tool	P/N
Screwdriver kit	95F3598
1/4″ drive spinner handle	1650840
1/4″ Sq. to 1/4″ hex torx adapter	93F2838
TR7-TR-10 tamper resistant torx bits	00P6967
Removal tool antenna RF connector	08K7159
USB 2.0 CD-RW/DVD-ROM combo drive II	40Y8687
USB cable	40Y8704
USB floppy diskette drive for maintenance diskette	05K9283
USB floppy diskette drive tool kit	27L3452
Test card for integrated Smart Card	42W7820
ThinkPad Hardware Maintenance Diskette Version 1.73 or later **Note:** Download the file from the following Web site: `http://www.lenovo.com/spm`	—

Notices

Lenovo may not offer the products, services, or features discussed in this document in all countries. Consult your local Lenovo representative for information on the products and services currently available in your area. Any reference to a Lenovo product, program, or service is not intended to state or imply that only that Lenovo product, program, or service may be used. Any functionally equivalent product, program, or service that does not infringe any Lenovo intellectual property right may be used instead. However, it is the user's responsibility to evaluate and verify the operation of any other product, program, or service.

Lenovo may have patents or pending patent applications covering subject matter described in this document. The furnishing of this document does not give you any license to these patents. You can send license inquiries, in writing, to:

Lenovo (United States), Inc.
1009 Think Place - Building One
Morrisville, NC 27560
U.S.A.
Attention: Lenovo Director of Licensing

LENOVO GROUP LTD. PROVIDES THIS PUBLICATION "AS IS" WITHOUT WARRANTY OF ANY KIND, EITHER EXPRESS OR IMPLIED, INCLUDING, BUT NOT LIMITED TO, THE IMPLIED WARRANTIES OF NON-INFRINGEMENT, MERCHANTABILITY OR FITNESS FOR A PARTICULAR PURPOSE. Some jurisdictions do not allow disclaimer of express or implied warranties in certain transactions, therefore, this statement may not apply to you.

This information could include technical inaccuracies or typographical errors. Changes are periodically made to the information herein; these changes will be incorporated in new editions of the publication. Lenovo may make improvements and/or changes in the product(s) and/or the program(s) described in this publication at any time without notice.

The products described in this document are not intended for use in implantation or other life support applications where malfunction may result in injury or death to persons. The information contained in this document does not affect or change Lenovo product specifications or warranties. Nothing in this document shall operate as an express or implied license or indemnity under the intellectual property rights of Lenovo or third parties. All information contained in this document was obtained in specific environments and is presented as an illustration. The result obtained in other operating environments may vary.

Lenovo may use or distribute any of the information you supply in any way it believes appropriate without incurring any obligation to you.

Any references in this publication to non-Lenovo Web sites are provided for convenience only and do not in any manner serve as an endorsement of those Web sites. The materials at those Web sites are not part of the materials for this Lenovo product, and use of those Web sites is at your own risk.

Any performance data contained herein was determined in a controlled environment. Therefore, the result obtained in other operating environments may

© Copyright Lenovo 2008

vary significantly. Some measurements may have been made on development-level systems and there is no guarantee that these measurements will be the same on generally available systems. Furthermore, some measurements may have been estimated through extrapolation. Actual results may vary. Users of this document should verify the applicable data for their specific environment.

Trademarks

The following terms are trademarks of Lenovo in the United States, other countries or both:

Active Protection System
Lenovo®
Rescue and Recovery®
ThinkLight®
ThinkPad®
ThinkVantage®
TrackPoint®
Ultrabay
UltraNav®

IBM (used under license) is trademark of the International Business Machines Corporation in the United States, other countries, or both:

The following terms are trademarks of Microsoft Corporation in the United States, other countries, or both:

Windows®
Windows Vista

The following are trademarks of Intel Corporation or its subsidiaries in the United States, other countries, or both:

Intel®
Intel® Core™ 2 Duo

Other company, product, or service names may be the trademarks or service marks of others.

ThinkPad

Part Number: 42X4239_02

(1P) P/N: 42X4239_02