ThinkPad

Hardware Maintenance Manual

ThinkPad Edge E120 and E125

Note: Before using this information and the product it supports, be sure to read the general information under Appendix A “Notices” on page 97.

Fourth Edition (March 2012)

© Copyright Lenovo 2012.
LIMITED AND RESTRICTED RIGHTS NOTICE: If data or software is delivered pursuant a General Services Administration “GSA” contract, use, reproduction, or disclosure is subject to restrictions set forth in Contract No. GS-35F-05925.

Contents

About this manual iii

Chapter 1. Safety information 1

General safety 1
Electrical safety 2
Safety inspection guide 3
Handling devices that are sensitive to electrostatic discharge 3
Grounding requirements 4
Safety notices (multilingual translations) 4

Chapter 2. Important service information 19

Strategy for replacing FRUs 19
Strategy for replacing a hard disk drive . . . 20
Important notice for replacing a system board 20
How to use error message 20
Strategy for replacing FRUs for CTO, CMV, and GAV 20
Product definition 20
FRU identification for CTO, CMV, and GAV products 21

Chapter 3. General checkout 23

What to do first 23
Checkout guide 24
System supporting the Lenovo ThinkVantage Toolbox program and the PC-Doctor for DOS diagnostics program 24
System supporting the Lenovo diagnostics programs 28
Power system checkout 30
Checking the ac power adapter 30
Checking operational charging 31
Checking the battery pack 31
Checking the backup battery 32

Chapter 4. Related service information 33

Restoring the factory contents by using Recovery Disc Set 33
Passwords 34
Power-on password 34
Hard disk password 34
Supervisor password 35
How to remove the power-on password . . . 35
How to remove the hard disk password . . . 35
Power management 36
Screen blank mode 36
Sleep (standby) mode 36
Hibernation mode 37
Symptom-to-FRU index 37
Numeric error codes 38
Error messages 39
Beep symptoms 39
No-beep symptoms 39
LCD-related symptoms 40
Intermittent problems 40
Undetermined problems 41

Chapter 5. Status indicators 43

Chapter 6. Special keys 45

Chapter 7. FRU replacement notices 47

Screw notices 47
Retaining serial numbers 48
Restoring the serial number of the system unit 48
Retaining the UUID 49
Reading or writing the ECA information . . . 49

Chapter 8. Removing and replacing a FRU 51

Before servicing ThinkPad Edge E120 and E125 models 51
1010 Battery pack 52
1020 Bottom slot cover 53
1030 Memory modules 54
1040 Hard disk drive or solid state drive assembly 54
1050 PCI Express Mini Card for wireless LAN . . 56
1060 PCI Express Mini Card for wireless WAN . . 58
1070 Keyboard 59
1080 Power sub card and microphone 61
1090 Top case assembly 62
1100 Bluetooth daughter card 64
1110 Speaker assembly 65
1120 I/O board 65
1130 System board assembly, fan assembly, and backup battery 66
1140 CRT board assembly (with cable) 69
1150 DC-in sub card and base cover assembly . . 69
2010 LCD unit 72
2020 LCD bezel assembly 74

© Copyright Lenovo 2012

2030 Integrated camera 74
2040 LCD panel, LCD cable, and hinges 75
2050 Wireless LAN antenna assembly, wireless WAN antenna assembly, and LCD rear cover assembly 77

Chapter 9. Locations 79
Front view 79
Rear view 80
Bottom view 80

Chapter 10. Parts list 81
Overall 82
LCD FRUs 85
Keyboard 88
Miscellaneous parts 89
ac power adapters 89
Power cords 90
Recovery discs 91
Windows XP Professional (32-bit) DVDs . . . 91
Windows Vista Business (32-bit) DVDs . . . 91
Windows 7 Home Basic (32-bit) with Service Pack 1 DVDs 91
Windows 7 Home Basic (64-bit) with Service Pack 1 DVDs 92
Windows 7 Home Premium (32-bit) with Service Pack 1 DVDs 92
Windows 7 Home Premium (64-bit) with Service Pack 1 DVDs 93
Windows 7 Professional (32-bit) with Service Pack 1 DVDs 94
Windows 7 Professional (64-bit) with Service Pack 1 DVDs 94
Windows 7 Ultimate (32-bit) with Service Pack 1 DVDs 95
Windows 7 Ultimate (64-bit) with Service Pack 1 DVDs 95
Windows 7 Starter (32-bit) with Service Pack 1 DVDs 95
Common service tools 96

Appendix A. Notices 97
Electronic emissions notices 98
Trademarks 98

About this manual

This manual contains service and reference information for the following ThinkPad® products.

ThinkPad Edge E120

Machine type (MT) 3043

ThinkPad Edge E125

MT 3035

Use this manual along with the advanced diagnostic tests to troubleshoot problems.

Important:

This manual is intended only for trained service technicians who are familiar with ThinkPad products. Use this manual along with the advanced diagnostic tests to troubleshoot problems effectively.
Before servicing a ThinkPad product, be sure to read all the information under Chapter 1 “Safety information” on page 1 and Chapter 2 “Important service information” on page 19.

© Copyright Lenovo 2012

Chapter 1. Safety information

This chapter presents following safety information that you need to be familiar with before you service a ThinkPad Notebook.

- "General safety" on page 1
- "Electrical safety" on page 2
- "Safety inspection guide" on page 3
- "Handling devices that are sensitive to electrostatic discharge" on page 3
- "Grounding requirements" on page 4
- "Safety notices (multilingual translations)" on page 4

General safety

Follow these rules to ensure general safety:

- Observe good housekeeping in the area of the machines during and after maintenance.
- When lifting any heavy object:
  1. Make sure that you can stand safely without slipping.
  2. Distribute the weight of the object equally between your feet.
  3. Use a slow lifting force. Never move suddenly or twist when you attempt to lift.
  4. Lift by standing or by pushing up with your leg muscles; this action removes the strain from the muscles in your back. *Do not attempt to lift any object that weighs more than 16 kg (35 lb) or that you think is too heavy for you.*
- Do not perform any action that causes hazards to the customer, or that makes the equipment unsafe.
- Before you start the machine, make sure that other service technicians and the customer's personnel are not in a hazardous position.
- Place removed covers and other parts in a safe place, away from all personnel, while you are servicing the machine.
- Keep your toolcase away from walk areas so that other people will not trip over it.
- Do not wear loose clothing that can be trapped in the moving parts of a machine. Make sure that your sleeves are fastened or rolled up above your elbows. If your hair is long, fasten it.
- Insert the ends of your necktie or scarf inside clothing or fasten it with a nonconductive clip, about 8 centimeters (3 inches) from the end.
- Do not wear jewelry, chains, metal-frame eyeglasses, or metal fasteners for your clothing.

  Attention: Metal objects are good electrical conductors.
- Wear safety glasses when you are hammering, drilling, soldering, cutting wire, attaching springs, using solvents, or working in any other conditions that might be hazardous to your eyes.
- After service, reinstall all safety shields, guards, labels, and ground wires. Replace any safety device that is worn or defective.
- Reinstall all covers correctly before returning the machine to the customer.
- Fan louvers on the machine help to prevent overheating of internal components. Do not obstruct fan louvers or cover them with labels or stickers.

© Copyright Lenovo 2012

Electrical safety

Observe the following rules when working on electrical equipment.

Important:

Use only approved tools and test equipment. Some hand tools have handles covered with a soft material that does not insulate you when working with live electrical currents.
Many customers have, near their equipment, rubber floor mats that contain small conductive fibers to decrease electrostatic discharges. Do not use this type of mat to protect yourself from electrical shock.

- Find the room emergency power-off (EPO) switch, disconnecting switch, or electrical outlet. If an electrical accident occurs, you can then operate the switch or unplug the power cord quickly.
- Do not work alone under hazardous conditions or near equipment that has hazardous voltages.
- Disconnect all power before:
  - Performing a mechanical inspection
  - Working near power supplies
  - Removing or installing main units
- Before you start to work on the machine, unplug the power cord. If you cannot unplug it, ask the customer to power-off the wall box that supplies power to the machine, and to lock the wall box in the off position.
- If you need to work on a machine that has *exposed* electrical circuits, observe the following precautions:
  - Ensure that another person, familiar with the power-off controls, is near you.

    Attention: Another person must be there to switch off the power, if necessary.
  - Use only one hand when working with powered-on electrical equipment; keep the other hand in your pocket or behind your back.

    Attention: An electrical shock can occur only when there is a complete circuit. By observing the above rule, you may prevent a current from passing through your body.
  - When using testers, set the controls correctly and use the approved probe leads and accessories for that tester.
  - Stand on suitable rubber mats (obtained locally, if necessary) to insulate you from grounds such as metal floor strips and machine frames.

  Observe the special safety precautions when you work with very high voltages; Instructions for these precautions are in the safety sections of maintenance information. Use extreme care when measuring high voltages.
- Regularly inspect and maintain your electrical hand tools for safe operational condition.
- Do not use worn or broken tools and testers.
- *Never assume* that power has been disconnected from a circuit. First, *check* that it has been powered off.
- Always look carefully for possible hazards in your work area. Examples of these hazards are moist floors, nongrounded power extension cables, power surges, and missing safety grounds.
- Do not touch live electrical circuits with the reflective surface of a plastic dental mirror. The surface is conductive; such touching can cause personal injury and machine damage.
- Do not service the following parts *with the power on* when they are removed from their normal operating places in a machine:
  - Power supply units
  - Pumps
  - Blowers and fans
  - Motor generators
  - Similar units to listed above

  This practice ensures correct grounding of the units.
- If an electrical accident occurs:

- Use caution; do not become a victim yourself.
- Switch off power.
- Send another person to get medical aid.

Safety inspection guide

The purpose of this inspection guide is to assist you in identifying potentially unsafe conditions. As each machine was designed and built, required safety items were installed to protect users and service technicians from injury. This guide addresses only those items. You should use good judgment to identify potential safety hazards due to attachment of non-ThinkPad features or options not covered by this inspection guide.

If any unsafe conditions are present, you must determine how serious the apparent hazard could be and whether you can continue without first correcting the problem.

Consider these conditions and the safety hazards they present:

- Electrical hazards, especially primary power (primary voltage on the frame can cause serious or fatal electrical shock)
- Explosive hazards, such as a damaged CRT face or a bulging capacitor
- Mechanical hazards, such as loose or missing hardware

To determine whether there are any potentially unsafe conditions, use the following checklist at the beginning of every service task. Begin the checks with the power off, and the power cord disconnected.

Checklist:

1. Check exterior covers for damage (loose, broken, or sharp edges).
2. Power off the computer. Disconnect the power cord.
3. Check the power cord for:
   a. A third-wire ground connector in good condition. Use a meter to measure third-wire ground continuity for 0.1 ohm or less between the external ground pin and the frame ground.
   b. The power cord should be the type specified in the parts list.
   c. Insulation must not be frayed or worn.
4. Check for cracked or bulging batteries.
5. Remove the cover.
6. Check for any obvious non-ThinkPad alterations. Use good judgment as to the safety of any non-ThinkPad alterations.
7. Check inside the unit for any obvious unsafe conditions, such as metal filings, contamination, water or other liquids, or signs of fire or smoke damage.
8. Check for worn, frayed, or pinched cables.
9. Check that the power-supply cover fasteners (screws or rivets) have not been removed or tampered with.

Handling devices that are sensitive to electrostatic discharge

Any computer part containing transistors or integrated circuits (ICs) should be considered sensitive to electrostatic discharge (ESD). ESD damage can occur when there is a difference in charge between objects. Protect against ESD damage by equalizing the charge so that the machine, the part, the work mat, and the person handling the part are all at the same charge.

Notes:

1. Use product-specific ESD procedures when they exceed the requirements noted here.

2. Make sure that the ESD protective devices you use have been certified (ISO 9000) as fully effective.

When handling ESD-sensitive parts:

- Keep the parts in protective packages until they are inserted into the product.
- Avoid contact with other people.
- Wear a grounded wrist strap against your skin to eliminate static on your body.
- Prevent the part from touching your clothing. Most clothing is insulative and retains a charge even when you are wearing a wrist strap.
- Use a grounded work mat to provide a static-free work surface. The mat is especially useful when handling ESD-sensitive devices.
- Select a grounding system, such as those listed below, to provide protection that meets the specific service requirement.

  Note: The use of a grounding system to guard against ESD damage is desirable but not necessary.

  – Attach the ESD ground clip to any frame ground, ground braid, or green-wire ground.
  – When working on a double-insulated or battery-operated system, use an ESD common ground or reference point. You can use coax or connector-outside shells on these systems.
  – Use the round ground prong of the ac plug on ac-operated computers.

Grounding requirements

Electrical grounding of the computer is required for operator safety and correct system function. Proper grounding of the electrical outlet can be verified by a certified electrician.

Safety notices (multilingual translations)

The safety notices in this section are provided in the following languages:
- English
- Arabic
- Brazilian Portuguese
- French
- German
- Hebrew
- Japanese
- Korean
- Spanish
- Traditional Chinese

DANGER

Before the computer is powered on after FRU replacement, make sure that all screws, springs, and other small parts are in place and are not left loose inside the computer. Verify this by shaking the computer and listening for rattling sounds. Metallic parts or metal flakes can cause electrical short circuits.

DANGER

Some standby batteries contain a small amount of nickel and cadmium. Do not disassemble a standby battery, recharge it, throw it into fire or water, or short-circuit it. Dispose of the battery as required by local ordinances or regulations. Use only the battery in the appropriate parts listing. Use of an incorrect battery can result in ignition or explosion of the battery.

DANGER

The battery pack contains small amounts of nickel. Do not disassemble it, throw it into fire or water, or short-circuit it. Dispose of the battery pack as required by local ordinances or regulations. Use only the battery in the appropriate parts listing when replacing the battery pack. Use of an incorrect battery can result in ignition or explosion of the battery.

DANGER

The lithium battery can cause a fire, an explosion, or a severe burn. Do not recharge it, remove its polarized connector, disassemble it, heat it above 100°C (212°F), incinerate it, or expose its cell contents to water. Dispose of the battery as required by local ordinances or regulations. Use only the battery in the appropriate parts listing. Use of an incorrect battery can result in ignition or explosion of the battery.

DANGER

If the LCD breaks and the fluid from inside the LCD gets into your eyes or on your hands, immediately wash the affected areas with water for at least 15 minutes. Seek medical care if any symptoms from the fluid are present after washing.

DANGER

To avoid shock, do not remove the plastic cover that protects the lower part of the inverter card.

DANGER

Though the main batteries have low voltage, a short-circuited or grounded battery can produce enough current to burn personnel or combustible materials.

DANGER

Unless hot swap is allowed for the FRU being replaced, do as follows before removing it: power off the computer, unplug all power cords from electrical outlets, remove the battery pack, and disconnect any interconnecting cables.

خطر

قبل اعادة تشغيل الحاسب بعد الانتهاء من استبدال FRU، تأكد من أنه قد تم اعادة كل من المسامير و السوست وكل الأجزاء الصغيرة الأخرى في أماكنهم ولم يتم فقدهم داخل الحاسب.
ويمكن التحقق من ذلك عن طريق هز الحاسب والاستماع لأي صوت صاخب يصدر منه.
قد تؤدي الأجزاء أو الرقائق المعدنية الى حدوث دائرة قصر.

خطر

تحتوي بعض البطاريات الاحتياطية على كمية صغيرة من مادتي النيكل والكادميوم. لا تقم بفك أو اعادة شحن البطارية الاحتياطية ولا تقم أيضا بالقاءها في النار أو الماء ولا تتسبب في احداث دائرة قصر بها. قم بالتخلص من البطارية كما هو موضح في القوانين المحلية.
استخدم نوع البطارية المحدد والذي يوصى باستخدامه. حيث أنه قد يؤدي استخدام نوع بطارية غير صحيح الى اشتعالها أو انفجارها.

خطر

تحتوي حزمة البطارية على كمية صغيرة من مادة النيكل. لا تقم بفكها أو القاءها في النار أو الماء ولا تتسبب في احداث دائرة قصر بها. تخلص من حزمة البطارية وفقا لما هو موضح في القوانين المحلية. قم، عند استبدال حزمة البطارية، باستخدام الأنواع المحددة فقط والتي يوصى باستخدامها. حيث أنه قد يؤدي استخدام نوع بطارية غير صحيح الى اشتعالها أو انفجارها.

خطر

قد تتسبب بطارية الليثيوم في حدوث حريق أو انفجار أو حدوث حروق شديدة. لا تقم باعادة شحن البطارية أو ازالة موصل الاستقطاب الخاص بها ولا تحاول أيضا فكها أو تسخينها لأكثر من ١٠٠ درجة مئوية (٢١٢ فهرنهايت) أو حرقها أو تعريض محتويات الخانة الخاصة بها للماء. قم بالتخلص من البطارية وفقا لما هو موضح في القوانين المحلية. استخدم نوع البطارية المحدد والذي يوصى باستخدامه. حيث أنه قد يؤدي استخدام نوع بطارية غير صحيح الى اشتعالها أو انفجارها.

خطر

اذا ما انكسرت شاشة LCD ولامس السائل الداخلي عينيك أو يديك، قم في الحال بغسلهما بالماء لمدة لا تقل عن ١٥ دقيقة. اذا ما وجدت أي أعراض بعد الغسل اطلب عندئذ المساعدة الطبية.

خطر

لتجنب التعرض لأي صدمات، لا تقم بازالة الغطاء البلاستيكي الذي يحمي الجزء الأسفل من بطاقة العاكس.

خطر

على الرغم من أن البطاريات الرئيسية يكون لها جهد منخفض، الا أنه قد تقوم البطاريات التي حدث قصور بها أو التي تم توصيلها أرضيا باصدار تيار يكفي لحدوث حروق للأفراد أو تعرض المواد القابلة للاشتعال للحريق.

خطر

ما لم يتم السماح بالتبديل الفوري لأي FRU الجاري استبداله بدون ضرورة اغلاق النظام، قم بتنفيذ ما يلي قبل ازالته. قم بايقاف تشغيل الحاسب ونزع كل أسلاك الطاقة من المخارج الكهربائية وقم أيضا بازالة حزمة البطارية ثم قم بفصل أي كابلات متصلة.

PERIGO

Antes de ligar o computador após a substituição da FRU, certifique-se de que todos os parafusos, molas e outras peças pequenas estejam no lugar e não estejam soltos dentro do computador. Verifique isso sacudindo o computador e procurando ouvir sons de peças soltas. Peças metálicas ou lascas de metal podem causar curto-circuito.

PERIGO

Algumas baterias reserva contêm uma pequena quantidade de níquel e cádmio. Não desmonte uma bateria reserva, recarregue-a, jogue-a no fogo ou na água, ou deixe-a entrar em curto-circuito. Descarte a bateria conforme requerido pelas leis ou regulamentos locais. Use somente a bateria nas partes listadas apropriadas. O uso de uma bateria incorreta pode resultar em combustão ou explosão da bateria.

PERIGO

O pacote da bateria contém uma pequena quantidade de níquel. Não o desmonte, jogue-o no fogo ou na água, ou deixe-o entrar em curto-circuito. Descarte o pacote da bateria conforme requerido pelas leis ou regulamentos locais. Use somente a bateria nas partes listadas apropriadas ao substituir o pacote da bateria. O uso de uma bateria incorreta pode resultar em combustão ou explosão da bateria.

PERIGO

A bateria de lítio pode causar incêndio, explosão ou graves queimaduras. Não a recarregue, remova seu conector polarizado, desmonte-a, aqueça-a acima de 100°C (212°F), incinere-a, ou exponha o conteúdo de sua célula à água. Descarte a bateria conforme requerido pelas leis ou regulamentos locais. Use somente a bateria nas partes listadas apropriadas. O uso de uma bateria incorreta pode resultar em combustão ou explosão da bateria.

PERIGO

Se o LCD quebrar e o fluido de dentro dele entrar em contato com seus olhos ou com suas mãos, lave as áreas afetadas imediatamente com água durante pelo menos 15 minutos. Procure cuidados médicos se algum sintoma causado pelo fluido surgir após a lavagem.

PERIGO

Para evitar choque elétrico, não remova a capa plástica que protege a parte inferior da placa inversora.

PERIGO

Embora as principais baterias possuam baixa voltagem, uma bateria em curto-circuito ou aterrada pode produzir corrente o bastante para queimar materiais de pessoal ou inflamáveis.

PERIGO

A menos que uma hot swap seja permitida para a FRU que está sendo substituída, faça o seguinte antes de removê-la: desligue o computador, desconecte todos os cabos de energia das tomadas, remova o pacote de baterias e desconecte quaisquer cabos de interconexão.

DANGER

Avant de remettre l'ordinateur sous tension après remplacement d'une unité en clientèle, vérifiez que tous les ressorts, vis et autres pièces sont bien en place et bien fixées. Pour ce faire, secouez l'unité et assurez-vous qu'aucun bruit suspect ne se produit. Des pièces métalliques ou des copeaux de métal pourraient causer un court-circuit.

DANGER

Certaines batteries de secours contiennent du nickel et du cadmium. Ne les démontez pas, ne les rechargez pas, ne les exposez ni au feu ni à l'eau. Ne les mettez pas en court-circuit. Pour les mettre au rebut, conformez-vous à la réglementation en vigueur. Lorsque vous remplacez la pile de sauvegarde ou celle de l'horloge temps réel, veillez à n'utiliser que les modèles cités dans la liste de pièces détachées adéquate. Une batterie ou une pile inappropriée risque de prendre feu ou d'exploser.

DANGER

La batterie contient du nickel. Ne la démontez pas, ne l'exposez ni au feu ni à l'eau. Ne la mettez pas en court-circuit. Pour la mettre au rebut, conformez-vous à la réglementation en vigueur. Lorsque vous remplacez la batterie, veillez à n'utiliser que les modèles cités dans la liste de pièces détachées adéquate. En effet, une batterie inappropriée risque de prendre feu ou d'exploser.

DANGER

La pile de sauvegarde contient du lithium. Elle présente des risques d'incendie, d'explosion ou de brûlures graves. Ne la rechargez pas, ne retirez pas son connecteur polarisé et ne la démontez pas. Ne l'exposez pas à une temperature supérieure à 100°C, ne la faites pas brûler et n'en exposez pas le contenu à l'eau. Mettez la pile au rebut conformément à la réglementation en vigueur. Une pile inappropriée risque de prendre feu ou d'exploser.

DANGER

Si le panneau d'affichage à cristaux liquides se brise et que vous recevez dans les yeux ou sur les mains une partie du fluide, rincez-les abondamment pendant au moins quinze minutes. Consultez un médecin si des symptômes persistent après le lavage.

DANGER

Afin d'éviter tout risque de choc électrique, ne retirez pas le cache en plastique protégeant la partie inférieure de la carte d'alimentation.

DANGER

Bien que le voltage des batteries principales soit peu élevé, le court-circuit ou la mise à la masse d'une batterie peut produire suffisamment de courant pour brûler des matériaux combustibles ou causer des brûlures corporelles graves.

DANGER

Si le remplacement à chaud n'est pas autorisé pour l'unité remplaçable sur site que vous remplacez, procédez comme suit avant de retirer l'unité : mettez l'ordinateur hors tension, débranchez tous les cordons d'alimentation des prises de courant, retirez le bloc de batterie et déconnectez tous les câbles d'interconnexion.

VORSICHT

Bevor nach einem FRU-Austausch der Computer wieder angeschlossen wird, muß sichergestellt werden, daß keine Schrauben, Federn oder andere Kleinteile fehlen oder im Gehäuse vergessen wurden. Der Computer muß geschüttelt und auf Klappergeräusche geprüft werden. Metallteile oder-splitter können Kurzschlüsse erzeugen.

VORSICHT

Die Bereitschaftsbatterie, die sich unter dem Diskettenlaufwerk befindet, kann geringe Mengen Nickel und Cadmium enthalten. Sie darf nur durch die Verkaufsstelle oder den IBM Kundendienst ausgetauscht werden. Sie darf nicht zerlegt, wiederaufgeladen, kurzgeschlossen, oder Feuer oder Wasser ausgesetzt werden. Die Batterie kann schwere Verbrennungen oder Verätzungen verursachen. Bei der Entsorgung die örtlichen Bestimmungen für Sondermüll beachten. Beim Ersetzen der Bereitschafts-oder Systembatterie nur Batterien des Typs verwenden, der in der Ersatzteilliste aufgeführt ist. Der Einsatz falscher Batterien kann zu Entzündung oder Explosion führen.

VORSICHT

Akkus enthalten geringe Mengen von Nickel. Sie dürfen nicht zerlegt, wiederaufgeladen, kurzgeschlossen, oder Feuer oder Wasser ausgesetzt werden. Bei der Entsorgung die örtlichen Bestimmungen für Sondermüll beachten. Beim Ersetzen der Batterie nur Batterien des Typs verwenden, der in der Ersatzteilliste aufgeführt ist. Der Einsatz falscher Batterien kann zu Entzündung oder Explosion führen.

VORSICHT

Die Systembatterie ist eine Lithiumbatterie. Sie kann sich entzünden, explodieren oder schwere Verbrennungen hervorrufen. Batterien dieses Typs dürfen nicht aufgeladen, zerlegt, über 100°C erhitzt oder verbrannt werden. Auch darf ihr Inhalt nicht mit Wasser in Verbindung gebracht oder der zur richtigen Polung angebrachte Verbindungsstecker entfernt werden. Bei der Entsorgung die örtlichen Bestimmungen für Sondermüll beachten. Beim Ersetzen der Batterie nur Batterien des Typs verwenden, der in der Ersatzteilliste aufgeführt ist. Der Einsatz falscher Batterien kann zu Entzündung oder Explosion führen.

VORSICHT

Die Leuchtstoffröhre im LCD-Bildschirm enthält Quecksilber. Bei der Entsorgung die örtlichen Bestimmungen für Sondermüll beachten. Der LCD-Bildschirm besteht aus Glas und kann zerbrechen, wenn er unsachgemäß behandelt wird oder der Computer auf den Boden fällt. Wenn der Bildschirm beschädigt ist und die darin befindliche Flüssigkeit in Kontakt mit Haut und Augen gerät, sollten die betroffenen Stellen mindestens 15 Minuten mit Wasser abgespült und bei Beschwerden anschließend ein Arzt aufgesucht werden.

VORSICHT

Aus Sicherheitsgründen die Kunststoffabdeckung, die den unteren Teil der Spannungswandlerplatine umgibt, nicht entfernen.

VORSICHT

Obwohl Hauptbatterien eine niedrige Spannung haben, können sie doch bei Kurzschluß oder Erdung genug Strom abgeben, um brennbare Materialien zu entzünden oder Verletzungen bei Personen hervorzurufen.

VORSICHT

Wenn ein Austausch der FRU bei laufendem Betrieb nicht erlaubt ist, gehen Sie beim Austausch der FRU wie folgt vor: Schalten Sie den Computer aus, ziehen Sie alle Netzkabel von den Netzsteckdosen ab, entfernen Sie den Akku und ziehen Sie alle miteinander verbundenen Kabel ab.

סכנה

לפני הפעלת המחשב לאחר החלפת FRU יש לוודא שכל הברגים, הקפיצים, וחלקים קטנים אחרים נמצאים במקומם ואינם חופשיים לזוז בתוך המחשב. כדי לוודא זאת, יש לטלטל את המחשב ולהקשיב לגילוי קולות שקשוק. חלקי או שבבי מתכת עלולים לגרום לקצרים חשמליים.

סכנה

סוללות המתנה מסוימות מכילות כמות קטנה של ניקל וקדמיום. אין לפרק סוללת המתנה, לטעון אותה מחדש, להשליך אותה לאש או למים או לקצר אותה. יש לשלק את הסוללה כנדרש על ידי התקנות והחוקים המקומיים. יש להשתמש רק בסוללה המופיעה ברשימת החלקים המתאימה. שימוש בסוללה לא מתאימה עלול לגרום להצתה או התפוצצות של הסוללה.

סכנה

מארז הסוללה מכיל כמות קטנה של ניקל וקדמיום. אין לפרק את מארז הסוללה, להשליך אותו לאש או למים או לקצר אותו. יש לשלק את מארז הסוללה הסוללה כנדרש על ידי התקנות והחוקים המקומיים. יש להשתמש רק בסוללה המופיעה ברשימת החלקים המתאימה בזמן החלפת מארז הסוללה. שימוש בסוללה לא מתאימה עלול לגרום להצתה או התפוצצות של הסוללה.

סכנה

סוללת הליתיום עלולה לגרום לשריפה, להתפוצצות או לכוויות קשות. אין לטעון אותה מחדש, לשלק את המחבר המקוטב שלה, לפרק אותה או לחמם אותה לטמפרטורה העולה על 100 מעלות צלזיוס. אין לשרוף את הסוללה ואין לחשוף את תוכן הסוללה למים. יש לשלק את הסוללה כנדרש בתקנות ובחוקים המקומיים. יש להשתמש רק בסוללה המופיעה ברשימת החלקים המתאימים. שימוש בסוללה אחרת עלול לגרום לסכנת שריפה או התפוצצות.

סכנה

אם מסך תצביש הנוזלי (LCD) נשבר והנוזל מתוך המסך בא במגע עם עיניכם או ידיכם, שטפו את האזורים הנגועים מיד במים במשך 15 דקות לפחות. פנו לקבלת עזרה רפואית אם תסמינים הנובעים מהמגע עם הנוזל נמשכים לאחר השטיפה.

סכנה

כדי למנוע התחשמלות, אין להסיר את מכסה הפלסטיק המגן על חלקו התחתון של הכרטיס החפוך.

סכנה

אף שהסוללות הראשיות הן בעלות מתח נמוך, סוללה מקוצרת או מוארקת עלולה להפיק זרם מספיק לגרימת כוויות או להצתת חומרים דליקים.

סכנה

אלא אם כן מותרת ‘החלפה חמה’ של ה-FRU המוחלף, פעלו כדלהלן לפני הסרתו:
כבו את המחשב, נתקו את כל כבלי החשמל מהשקעים, הוציאו את מארז הסוללות ונתקו את כל הכבלים המחוברים.

危険

FRU の交換後、 ThinkPad の電源を入れる前に、ねじ、バネ、その他の小さな部品がすべて正しい位置にあり、また ThinkPad の内部で緩んでいないことを確認してください。
これを確認するには、 ThinkPad を振って、カチャカチャと音がしないか確かめます。金属部品や金属破片はショートの原因になることがあります。

危険

予備バッテリーの中には少量のニッケルとカドミウムが含まれているものがあります。したがって、予備バッテリーの分解、再充電、火または水の中への投棄、またはショートさせることは決して行わないでください。バッテリーを廃棄する場合は地方自治体の条例に従ってください。適切なパーツ・リストにあるバッテリーだけを使用してください。誤ったバッテリーを使用すると、バッテリーが発火したり、爆発したりすることがあります。

危険

バッテリー・パックには少量のニッケルが含まれています。バッテリー・パックを分解したり、火または水の中に投げ込んだり、ショートさせないでください。バッテリー・パックの廃棄にあたっては、地方自治体の条例または規則に従ってください。バッテリー・パックを交換するときは、適切なパーツ・リストにあるバッテリーだけを使用してください。誤ったバッテリーを使用すると、バッテリーが発火したり、爆発したりすることがあります。

危険

リチウム・バッテリーは、火災、爆発、または重症のやけどを引き起こすことがあります。バックアップ・バッテリーの充電、その極性コネクターの取り外し、バッテリー本体の分解、
100 ℃ (212 ˚F) 以上への加熱、焼却、電池の中身を水に浸すことはしないでください。バッテリーを廃棄する場合は地方自治体の条例に従ってください。適切なパーツ・リストにあるバッテリーだけを使用してください。誤ったバッテリーを使用すると、バッテリーが発火したり、爆発したりすることがあります。

危険

LCD が破損し、 LCD の中の液体が目に入ったり、手に触れたりした場合は、液体が触れた部分を少なくとも 15 分間洗い流してください。洗い流した後に、液体によって何らかの症状が現れた場合は、医師の治療を受けてください。

危険

感電を防ぐため、インバーター・カードの下部を保護しているプラスチック・カバーを外さないでください。

危険

メイン・バッテリーの電圧は低くても、ショートしたり、接地したバッテリーが、作業者にやけどを負わせたり、可燃物を燃やすだけの電流を発生させる場合があります。

危険

交換しようとしている FRU がホット・スワップに対応していない場合、それを取り外す前に、コンピューターの電源をオフにし、すべての電源コードをコンセントから抜き、バッテリー・パックを取り外して、相互接続しているケーブルをすべて切り離してください。

위험

FRU를 교체하고 나서 컴퓨터 전원을 켜기 전에 모든 나사, 스프링 및 기타 작은 부품들이 올바른 위치에 있는지, 컴퓨터 내부에 단단하게 연결되어 있는지 확인하십시오. 컴퓨터를 흔들어 달깍거리는 소리가 나지 않는지 확인하십시오. 금속 부품 또는 금속 조각은 누전을 일으킬 수 있습니다.

위험

일부 보조 배터리에는 소량의 니켈 및 카트뮴이 포함되어 있습니다. 보조 배터리를 분해하거나, 다시 충전하거나, 불 또는 물에 던지거나, 단락시키지 마십시오. 배터리 팩을 폐기할 때에는 해당 지역의 법률 규정을 따르십시오. 배터리 팩을 교체할 때에는 올바른 배터리만 사용하십시오. 올바르지 않은 배터리를 사용하면 배터리가 발화되거나 폭발할 수 있습니다.

위험

배터리 팩에는 소량의 니켈이 포함되어 있습니다. 배터리 팩을 분해하거나, 불 또는 물에 던지거나, 단락시키지 마십시오. 배터리 팩을 폐기할 때에는 해당 지역의 법률 규정을 따르십시오. 배터리 팩을 교체할 때에는 올바른 배터리만 사용하십시오. 올바르지 않은 배터리를 사용하면 배터리가 발화되거나 폭발할 수 있습니다.

위험

리튬 배터리는 화재, 폭발 또는 심각한 화상을 일으킬 수 있습니다. 리튬 배터리를 다시 충전하거나, 극성 커넥터를 제거하거나, 분해하거나, 100C(212F) 이상으로 가열하거나, 소각하거나, 전지 내용물을 물에 노출시키지 마십시오. 배터리를 폐기할 때에는 해당 지역을 법률 규정을 따르십시오. 올바른 배터리만 사용하십시오. 올바르지 않은 배터리를 사용하면 배터리가 발화되거나 폭발할 수 있습니다.

위험

LCD가 파손되어 LCD 내부의 액체가 눈에 들어가거나 손에 묻으면 즉시 깨끗한 물로 15분 이상 닦아 내십시오. 씻은 후에 조금이라도 이상을 느끼면 즉시 병원에 가서 의사의 진찰을 받아야 합니다.

위험

전기적 위험을 방지하려면 인버터 카드의 아래 부분을 보호하는 플라스틱 덮개를 제거하지 마십시오.

위험

기본 배터리의 전압은 낮지만, 단락되거나 접지된 배터리는 화상을 입히기에 충분한 전류와 가연성 물질을 발생시킬 수 있습니다.

위험

FRU 교체 시 Hot Swap이 지원되지 않는 경우, FRU를 제거하기 전에 컴퓨터의 전원을 끄고, 전기 콘센트에서 전원 코드를 분리하고, 배터리를 제거한 후, 연결된 모든 케이블을 분리하십시오.

PELIGRO

Antes de encender el sistema despues de sustituir una FRU, compruebe que todos los tornillos, muelles y demás piezas pequeñas se encuentran en su sitio y no se encuentran sueltas dentro del sistema. Compruébelo agitando el sistema y escuchando los posibles ruidos que provocarían. Las piezas metálicas pueden causar cortocircuitos eléctricos.

PELIGRO

Algunas baterías de reserva contienen una pequeña cantidad de níquel y cadmio. No las desmonte, ni recargue, ni las eche al fuego o al agua ni las cortocircuite. Deséchelas tal como dispone la normativa local. Utilice sólo baterías que se encuentren en la lista de piezas. La utilización de una batería no apropiada puede provocar la ignición o explosión de la misma.

PELIGRO

Las baterías contienen pequeñas cantidades de níquel. No las desmonte, ni recargue, ni las eche al fuego o al agua ni las cortocircuite. Deséchelas tal como dispone la normativa local. Utilice sólo baterías que se encuentren en la lista de piezas al sustituir la batería. La utilización de una batería no apropiada puede provocar la ignición o explosión de la misma.

PELIGRO

La batería de repuesto es una batería de litio y puede provocar incendios, explosiones o quemaduras graves. No la recargue, ni quite el conector polarizado, ni la desmonte, ni caliente por encima de los 100°C (212°F), ni la incinere ni exponga el contenido de sus celdas al agua. Deséchela tal como dispone la normativa local.

PELIGRO

Si la LCD se rompe y el fluido de su interior entra en contacto con sus ojos o sus manos, lave inmediatamente las áreas afectadas con agua durante 15 minutos como mínimo. Obtenga atención medica si se presenta algún síntoma del fluido despues de lavarse.

PELIGRO

Para evitar descargas, no quite la cubierta de plástico que rodea la parte baja de la tarjeta invertida.

PELIGRO

Aunque las baterías principales tienen un voltaje bajo, una batería cortocircuitada o con contacto a tierra puede producir la corriente suficiente como para quemar material combustible o provocar quemaduras en el personal.

PELIGRO

Salvo que se permita el intercambio en caliente para la unidad sustituible localmente, realice lo siguiente antes de extraerla: apague el sistema, desconecte todos los cables de alimentación de las tomas de alimentación eléctrica, extraiga la batería y desconecte los cables de interconexión.

危險

完成 FRU 更換之後，在開啟電腦的電源之前，請確定所有螺絲、彈簧及其他小零件都已歸位，沒有遺留在電腦內部。
若要確認這一點，請搖晃電腦，聽聽看是否有卡嗒的聲響。
金屬零件或儀錶的火花會造成電線短路。

危險

部分備用電池含有微量的鎳和鎘。請勿拆開備用電池、再充電、丟入火或水中，或使其形成短路。請按照當地法令或規定來棄置電池。

僅限使用零件清單中的電池。使用不適當的電池會導致電池起火或爆炸。

危險

電池套件含有微量的鎳。請勿拆開電池套件、丟入火或水中，或使其形成短路。請按照當地法令或規定來棄置電池套件。

更換電池套件時，僅限使用零件清單中的電池。使用不適當的電池會導致電池起火或爆炸。

危險

鋰電池會導致起火、爆炸或嚴重燒傷。請勿再充電、拔除其電極接頭、拆開、加熱超過 100°C (212°F) 、焚燒，或讓電池組成物浸到水。請按照當地法令或規定來棄置電池。
僅限使用零件清單中的電池。使用不適當的電池會導致電池起火或爆炸。

危險

如果 LCD 破裂導致 LCD 流出的液體沾到您的眼睛或手，請立即以清水沖洗沾染部位至少 15 分鐘。如果在清洗後出現該液體所造成的任何症狀，請就醫治療。

危險

為避免電擊，請勿拆下轉換卡下面的塑膠護蓋。

危險

雖然主電池的電壓很低，但短路或接地電池所產生的電流，仍足以使人燒傷或使可燃物質起火。

危險

除非 FRU 允許以熱抽換來替換，否則請依下列方式將其移除：將電腦關機，拔除插座上所有電源線，移除電池包，並拔開任何交互連接的線材。

Chapter 2. Important service information

This chapter presents following important service information that applies to all machine types supported by this manual:

- "Strategy for replacing FRUs" on page 19
  - "Strategy for replacing a hard disk drive" on page 20
  - "Important notice for replacing a system board" on page 20
  - "How to use error message" on page 20
- "Strategy for replacing FRUs for CTO, CMV, and GAV" on page 20
  - "Product definition" on page 20
  - "FRU identification for CTO, CMV, and GAV products" on page 21

Important:

- Advise customers to contact the Lenovo Customer Support Center if they need any assistance in obtaining or installing any software fixes, drivers, and UEFI BIOS downloads. Telephone numbers for Lenovo Support are available at:
  http://www.lenovo.com/support/phone
- System Disassembly/Reassembly videos that show the FRU removals or replacements for the Lenovo® authorized service technicians are available in the following support site:
  http://www.lenovoservicetraining.com/ion/

Strategy for replacing FRUs

Before replacing parts:

Make sure that all software fixes, drivers, and UEFI BIOS downloads are installed before replacing any FRUs listed in this manual.

After a system board is replaced, ensure that the latest UEFI BIOS is loaded to the system board before completing the service action.

To download software fixes, drivers, and UEFI BIOS, go to http://www.lenovo.com/support and click **Download Drivers & Software**. Then follow the instructions on the screen to install the necessary software.

Use the following strategy to prevent unnecessary expense for replacing and servicing FRUs:

- **If you are instructed to replace a FRU but the replacement does not correct the problem, reinstall the original FRU before you continue**.
- Some computers have both a processor board and a system board. If you are instructed to replace either the processor board or the system board, and replacing one of them does not correct the problem, reinstall that board, and then replace the other one.
- If an adapter or a device consists of more than one FRU, any of the FRUs may be the cause of the error. Before replacing the adapter or device, remove the FRUs, one by one, to see if the symptoms change. Replace only the FRU that changed the symptoms.

Attention: The setup configuration on the computer you are servicing may have been customized. Running Automatic Configuration may alter the settings. Note the current configuration settings (using the View Configuration option); then, when service has been completed, verify that those settings remain in effect.

© Copyright Lenovo 2012

Strategy for replacing a hard disk drive

Always try to run a low-level format before replacing a hard disk drive (HDD). This will cause all customer data on the hard disk to be lost. Be sure that the customer has a current backup of the data before doing this task.

Attention: The drive startup sequence in the computer you are servicing may have been changed. Be extremely careful during write operations such as copying, saving, or formatting. If you select an incorrect drive, data or programs can be overwritten.

Important notice for replacing a system board

Some components mounted on a system board are very sensitive. Improper handling of a system board can cause damage to those components, and may cause a system malfunction.

Attention: When handling a system board:

- Do not drop a system board or apply any excessive force to it.
- Avoid rough handling of any kind.
- Avoid bending a system board and hard pushing to prevent cracking at each BGA (Ball Grid Array) chipset.

How to use error message

Use the error codes displayed on the screen to diagnose failures. If more than one error code is displayed, begin the diagnosis with the first error code. Whatever causes the first error code may also cause false error codes. If no error code is displayed, see whether the error symptom is listed in the Symptom-to-FRU Index for the computer you are servicing.

Strategy for replacing FRUs for CTO, CMV, and GAV

Product definition

Dynamic Configure To Order (CTO)

This provides the ability for a customer to configure a Lenovo solution from an eSite, and have this configuration sent to fulfillment, where it is built and shipped directly to the customer. The machine label, Product Entitlement Warehouse (PEW), eSupport, and the HMM will load these products as the 4-digit MT and 3-digit model, where model = “CTO” (Example: 1829-CTO).

Custom Model Variant (CMV)

This is a unique configuration that has been negotiated between Lenovo and the customer. A unique 4-digit MT and 3-digit model is provided to the customer to place orders (Example: 1829-W15). A CMV is a special bid offering. Therefore, it is NOT generally announced.

- The MTM portion of the machine label is the 4-digit MT and 3-digit model, where model = “CTO” (Example: 1829-CTO). The PRODUCT ID portion of the machine label is the 4-digit MT and 3-digit CMV model (Example: 1829-W15).
- The PEW record is the 4-digit MT and 3-digit model, where model = “CTO” (Example: 1829-CTO).
- eSupport will show both the CTO and CMV machine type models (Example: 1829-CTO and 1829-W15 will be found on the eSupport site.)
- The HMM will have the 4-digit MT and 3-digit CTO model only (Example: 1829-CTO). Again, CMVs are custom models and are not found in the HMM.

General Announce Variant (GAV)

This is a standard model (fixed configuration). GAVs are announced and offered to all customers. The MTM portion of the machine label is a 4-digit MT and 3-digit model, where model = a “fixed part number”, not “CTO” (Example: 1829-F1U). Also, PEW, eSupport, and the HMM will list these products under the same fixed model number.

FRU identification for CTO, CMV, and GAV products

There are three information resources to identify which FRUs are used to support CTO, CMV, and GAV products. These sources are PEW, eSupport, and the HMM.

Using PEW

- **PEW** is the primary source for identifying FRU part numbers and FRU descriptions for the key commodities for CTO, CMV and GAV products at a MT - serial number level. An example of key commodities are hard disk drives, system boards, microprocessors, Liquid Crystal Displays (LCDs), and memory.
- Remember, all CTO and CMV products are loaded in PEW under the 4-digit MT and 3-digit model, where model = “CTO” (Example: 1829-CTO). GAVs are loaded in PEW under the 4-digit MT and 3-digit model, where model = a “fixed part number”, not “CTO” (Example: 1829-F1U).
- PEW can be accessed at the following Web site:
  http://www.lenovo.com/support/site.wss/document.do?lndocid=LOOK-WARNTY
  Select Warranty lookup. Input the MT and the Serial number and the list of key commodities will be returned in the PEW record under COMPONENT INFORMATION.

Using eSupport

For Key Commodities (Examples - hard disk drive, system board, microprocessor, LCD, and memory)

- eSupport can be used to view the list of key commodities built in a particular machine serial (this is the same record found in PEW).
- eSupport can be accessed at the following Web site:
  http://www.lenovo.com/support
- To view the key commodities, do the following:
  1. Click **Products & Service Warranty**.
  2. Click **Check Warranty Status**.
  3. On the Warranty Status Lookup page, click **Parts Lookup**.
  4. Type your machine type and serial number, and then click **Submit**. The key commodities will be displayed.

For the Remaining FRUs (the complete list of FRUs at the MT Model level)

- eSupport can be used to view the complete list of FRUs for a machine type and model.
- To view the complete list of FRUs, do the following:
  1. Click **Product & Parts Detail** and then follow the instructions on the screen to reach the Product and Parts Details page.
  2. Click the **Parts Detail** tab to view the list of service parts.

Using the HMM

For Key Commodities (Examples - hard disk drive, system board, microprocessor, LCD, and memory)

Use the HMM as a back-up to PEW and eSupport to view the complete list of FRUs at the MT Model level.

Chapter 3. General checkout

This chapter presents following information:

- "What to do first" on page 23
- "Checkout guide" on page 24
- "System supporting the Lenovo ThinkVantage Toolbox program and the PC-Doctor for DOS diagnostics program" on page 24
- "System supporting the Lenovo diagnostics programs" on page 28
- "Power system checkout" on page 30

Before you go to the checkout guide, be sure to read the following important notes.

Important notes:

- **Only certified trained personnel should service the computer.**
- **Before replacing any FRU, read the entire page on removing and replacing FRUs.**
- **When you replace FRUs, use new nylon-coated screws.**
- **Be extremely careful during such write operations as copying, saving, or formatting.** Drives in the computer that you are servicing sequence might have been altered. If you select an incorrect drive, data or programs might be overwritten.
- **Replace a FRU only with another FRU of the correct model.** When you replace a FRU, make sure that the model of the machine and the FRU part number are correct by referring to the FRU parts list.
- **A FRU should not be replaced because of a single, unreproducible failure.** Single failures can occur for a variety of reasons that have nothing to do with a hardware defect, such as cosmic radiation, electrostatic discharge, or software errors. Consider replacing a FRU only when a problem recurs. If you suspect that a FRU is defective, clear the error log and run the test again. If the error does not recur, do not replace the FRU.
- **Be careful not to replace a nondefective FRU.**

What to do first

When you do return a FRU, you must include the following information in the parts exchange form or parts return form that you attach to it:

1. Name and phone number of service technician
2. Date of service
3. Date on which the machine failed
4. Date of purchase
5. Failure symptoms, error codes appearing on the display, and beep symptoms
6. Procedure index and page number in which the failing FRU was detected
7. Failing FRU name and part number
8. Machine type, model number, and serial number
9. Customer's name and address

Note: During the warranty period, the customer may be responsible for repair costs if the computer damage was caused by misuse, accident, modification, unsuitable physical or operating environment, or improper maintenance by the customer. Following is a list of some common items that are not covered under warranty and some symptoms that might indicate that the system was subjected to stress beyond normal use.

Before checking problems with the computer, determine whether the damage is covered under the warranty by referring to the following list:

The following are not covered under warranty:

- LCD panel cracked from the application of excessive force or from being dropped
- Scratched (cosmetic) parts

© Copyright Lenovo 2012

- Distortion, deformation, or discoloration of the cosmetic parts
- Plastic parts, latches, pins, or connectors that have been cracked or broken by excessive force
- Damage caused by liquid spilled into the system
- Damage caused by the improper insertion of a PC Card or the installation of an incompatible card
- Fuses blown by attachment of a nonsupported device
- Forgotten computer password (making the computer unusable)
- Sticky keys caused by spilling a liquid onto the keyboard
- Use of an incorrect ac power adapter on laptop products

The following symptoms might indicate damage caused by nonwarranted activities:
- Missing parts might be a symptom of unauthorized service or modification.
- If the spindle of a hard disk drive becomes noisy, it may have been subjected to excessive force, or dropped.

Checkout guide

Use the following procedures as a guide in identifying and correcting problems with the ThinkPad Notebook.

Note: The diagnostic tests are intended to test only ThinkPad products. The use of non-ThinkPad products, prototype cards, or modified options can lead to false indications of errors and invalid system responses.

1. Identify the failing symptoms in as much detail as possible.
2. Verify the symptoms. Try to re-create the failure by running the diagnostic test or by repeating the operation.

System supporting the Lenovo ThinkVantage Toolbox program and the PC-Doctor for DOS diagnostics program

The section provides information about ThinkPad computers that support the Lenovo ThinkVantage Toolbox program and the PC-Doctor® for DOS diagnostics program. Some descriptions might not apply to your particular computer.

Diagnostics using PC-Doctor for DOS

The ThinkPad Notebook has a test program called PC-Doctor for DOS (hereafter called *PC-Doctor*.) You can detect errors by running the diagnostics test included in PC-Doctor.

Note: PC-Doctor for DOS is available at the following Web site:

http://www.lenovo.com/support

To create the PC-Doctor diagnostic CD, follow the instructions on the Web site.

For some possible configurations of the computer, PC-Doctor might not run correctly. To avoid this problem, you need to initialize the computer setup by use of the ThinkPad Setup before you run PC-Doctor.

To enter ThinkPad Setup, do as follows:

1. Turn on the computer.
2. When the ThinkPad logo comes up, immediately press F1 to enter the ThinkPad Setup.

Note: If a supervisor password has been set by the customer, ThinkPad Setup menu appears after the password is entered. You can start ThinkPad Setup by pressing Enter instead of entering the supervisor password; however, you cannot change the parameters that are protected by the supervisor password.

On the ThinkPad Setup screen, press F9, Enter, F10, and then Enter.

Note: When you initialize the computer configuration, some devices are disabled, such as the serial port. If you test one of these devices, you will need to enable it by using Configuration utility for DOS. The utility is available on the following Web site: http://www.lenovo.com/support

Testing the computer

In this product, you need an external optical drive to use the PC-Doctor diagnostic CD to test the hardware features.

Note: The PC-Doctor for DOS CD-R/CD-RW disc supports only test of internal optical disc drives (CD-RW, CD-RW/DVD Combo, and DVD Multi drives) on ThinkPad computers. It does not support test of any optical disc drives connected through USB devices, PC cards, CardBus cards, or similar. The USB limitation only applies to testing of the device. Using a bootable PC-Doctor for DOS CD/DVD, the system can be started from a USB attached optical drive.

To run the test, do as follows:

1. Turn off the computer.
2. Make sure that the optical drive that is supported as a startup device is installed to the computer you are servicing.
3. Turn on the computer. If the computer cannot be powered on, go to “Power system checkout” on page 30, and check the power sources.

   If an error code appears, go to “Symptom-to-FRU index” on page 37.
4. When the ThinkPad logo comes up, immediately press F12 to enter the Network Boot menu.
5. Insert the PC-Doctor CD into the optical drive.
6. Press cursor keys to select **ATAPI CDx** (x: 0, 1, ...) and then press Enter.
7. Follow the instructions on the screen.
8. The main panel of PC-Doctor appears.
9. Select **Diagnostics** with the arrow keys, and press Enter.

   Note: You can select an item not only with the arrow keys, but also with the TrackPoint® pointer. Instead of pressing Enter, click the left button.

   A pull-down menu appears. (Its exact form depends on the model.)

   Note: PC-Doctor menu does not mean the formal support device list. Some unsupported device names may appear in the PC-Doctor menu.

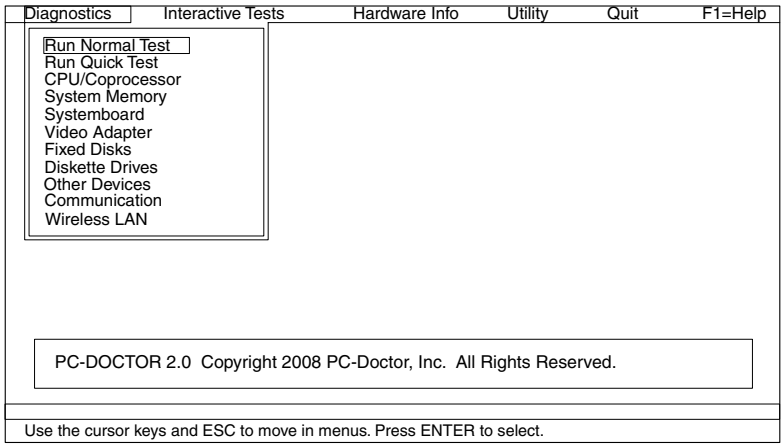

   The options on the test menu are as follows:

Diagnostics	Interactive Tests
• Run Normal Test • Run Quick Test • CPU/Coprocessor • System Memory • Systemboard • Video Adapter • Fixed Disks • Diskette Drives • Other Devices • Communication • Wireless LAN	• Keyboard • Video • Internal Speaker • Mouse • Diskette • System Load • Optical Drive Test • Intel® WLAN Radio Test
Notes: • In the **Keyboard** test in **Interactive Tests**, the Fn key should be held down for at least 2 seconds; otherwise, it cannot be sensed. • **Video Adapter** test supports only the LCD display on the ThinkPad Notebook. If you have an external monitor attached to the computer, detach it before running PC-Doctor for DOS. • To test **Digital Signature Chip**, the security chip must be set to Active. **Note:** For models with no internal optical drives, **Optical Drive Test** can not be selected.	

10. Run the applicable function test.
11. Follow the instructions on the screen. If there is a problem, PC-Doctor shows messages describing it.
12. To exit the test, select **Quit - Exit Diag**. To cancel the test, press Esc.

Note: After running PC-Doctor, check the time and date on the system and reset them if they are incorrect.

Detecting system information with PC-Doctor

PC-Doctor can detect the following system information:

Hardware Info

System Configuration
Memory Contents
Physical Disk Drives
VGA Information
ATA Drive Info
PCI Information
SMBIOS Info
VESA LCD Info
Hardware Events Log

Utility

Run External Tests
Benchmark System
DOS Shell
Tech Support Form
Battery Rundown
Erase Drive Contents
View PCDR Host Log

Lenovo ThinkVantage Toolbox

Lenovo ThinkVantage® Toolbox is a diagnostic program that works through the Windows® operating system. It enables you to view symptoms of computer problems and solutions for them, and includes automatic notification when action is required, computing assistance, advanced diagnostics, and diagnostic history.

Note: To install the latest Lenovo ThinkVantage Toolbox on the computer, go to http://web.lenovothinkvantagetoolbox.com/ click **Download Lenovo ThinkVantage Toolbox**, and then follow the instructions on the Web site.

To run this program, do as follows:

Windows 7:

Click **Start → Control Panel → System and Security → Lenovo - System Health and Diagnostics**.

Windows XP:

Click **Start → All Programs → ThinkVantage → Lenovo ThinkVantage Toolbox**.

Follow the instructions on the screen. Lenovo ThinkVantage Toolbox also has problem determination aids that determine software and usage problems.

For additional information about this program, see the Help for the program.

FRU tests

The following table shows the test for each FRU.

Table 1. FRU tests

FRU	Applicable test
System board	1. **Diagnostics → CPU/Coprocessor** 2. **Diagnostics → Systemboard**
Power	**Diagnostics → ThinkPad Devices → AC Adapter, Battery 1 (Battery2)**
LCD unit	1. **Diagnostics → Video Adapter** 2. **Interactive Tests → Video**
Audio	Enter the ThinkPad Setup and change Serial ATA (SATA) setting to **Compatibility**, and run **Diagnostics → Other Device → Conexant Audio**
Speaker	**Interactive Tests → Internal Speaker** **Note:** Once Audio test is done, the no sound is heard this test. In this case, turn off and turn on the computer. Then, run this test again.
Keyboard	1. **Diagnostics → Systemboard → Keyboard** 2. **Interactive Tests → Keyboard**
Hard disk drive	Enter the ThinkPad Setup and change Serial ATA (SATA) setting to **Compatibility**, and run **Diagnostics → Fixed Disks**
Diskette drive	1. **Diagnostics → Diskette Drives** 2. **Interactive Tests → Diskette**
Memory	1. If two DIMMs are installed, remove one of them and run **Diagnostics → System Memory**. 2. If the problem does not recur, return the DIMM to its place, remove the other one, and run the test again.

Table 1. FRU tests (continued)

FRU	Applicable test
TrackPoint or pointing device	If the TrackPoint does not work, check the configuration as specified in the ThinkPad Setup. If the TrackPoint is disabled, select **Automatic** to enable it. After you use the TrackPoint, the pointer may drift on the screen for a short time. This drift can occur when a slight, steady pressure is applied to the TrackPoint pointer. This symptom is not a hardware problem. If the pointer stops after a short time, no service action is necessary. If enabling the TrackPoint does not correct the problem, continue with the following: • **Interactive Tests → Mouse**
Touch Pad	If the Touch Pad does not work, check the configuration as specified in the ThinkPad Setup. If the Touch Pad is disabled, select **Automatic** to enable it. If enabling the Touch Pad does not correct the problem, continue with the following: • **Interactive Tests → Mouse**

System supporting the Lenovo diagnostics programs

The section provides information about ThinkPad computers that support the Lenovo diagnostics programs. Some descriptions might not apply to your particular computer.

The Lenovo diagnostics programs includes following:

- Lenovo Solution Center
- Quick test programs
- UEFI diagnostic program
- Bootable diagnostic programs

Lenovo Solution Center

The Lenovo Solution Center program enables you to troubleshoot and resolve computer problems. It combines diagnostic tests, system information collection, security status, and support information, along with hints and tips for maximum system performance.

Note: The Lenovo Solution Center program is available only on models preinstalled with the Windows 7 operating system. It also can be downloaded from http://www.lenovo.com/diags.

To run the Lenovo Solution Center program, click **Start → Control Panel → System and Security → Lenovo - System Health and Diagnostics**, and then follow the instructions on the screen.

For additional information about this program, see the help information system.

Quick test programs

Lenovo Hard Drive Quick Test and Lenovo Memory Quick Test are two quick test programs that enable you to troubleshoot and resolve computer internal storage and memory problems.

Notes:

- If the computer you are servicing is not installed with the Lenovo Soluton Center program, you can download the quick test programs from the Lenovo Support Web site.
- The two programs are applicable to computers installed with the Windows 7, Windows XP, Windows Server 2003, or Windows Server 2008 operating system.

To download and install a quick test program, go to http://www.lenovo.com/diags, and follow the instructions on the Web site.

To run a quick test using the downloaded program, do the following:

1. Go to the C:\SWTOOLS\ldiag folder.
2. Double-click the gui_lsc_lite.exe file.
3. When the **User Account Control** window opens, click **Yes**.
4. Select the device class to be tested.
5. Select the devices to be tested.
6. Select the tests to be performed.
7. Follow the instructions on the screen to start the test. When a problem is detected, information messages will be displayed. Refer to the messages to troubleshoot the problem.

UEFI diagnostic program

A UEFI diagnostic program is preinstalled on the computer. It enables you to test memory and internal storage problems, view system information, and check and recover bad sectors on internal storage devices.

To run the UEFI diagnostic program, do the following:

1. Turn on the computer. If the computer cannot be turned on, go to “Power system checkout” on page 30, and check the power sources. If an error code is displayed, go to “Symptom-to-FRU index” on page 37 for error code descriptions and troubleshooting hints.
2. When the ThinkPad logo is displayed, repeatedly press and release the F12 key. When the Boot Menu window opens, release the F12 key.
3. Press the Tab key to switch to the Application Menu window.
4. Use the arrow keys to select **Lenovo Diagnostics** and then press Enter. The main screen of the UEFI diagnostic program is displayed.
5. Follow the instructions on the screen to use the diagnostic program.

The options on the main screen are as follows:

Tests	Tools
• Quick Memory Test • Quick Storage Device Test • Exit Application	• System Information • Recover Bad Sectors Tool

Bootable diagnostic programs

If the computer you are servicing is not installed with the UEFI diagnostic program, you can download a bootable diagnostic program from the Lenovo Support Web site. The bootable diagnostic programs enable you to test computer memory and internal storage devices, view system information, and check and recover the internal storage devices. To use the bootable diagnostic programs, you can create a bootable diagnostic medium on a USB device or CD.

To create a bootable diagnostic medium, do the following:

1. Go to http://www.lenovo.com/diags.
2. Click **Lenovo Bootable Diagnostics**.
3. Follow the instructions on the Web site to create a bootable diagnostic medium on a USB device or CD.

To use the diagnostic medium you have created, do one of the following:

- If you have created the bootable diagnostic medium on a USB device, do the following:
  1. Attach the USB device to the computer.
  2. Turn on the computer. If the computer cannot be turned on, go to “Power system checkout” on page 30, and check the power sources. If an error code is displayed, go to “Symptom-to-FRU index” on page 37 for error code descriptions and troubleshooting hints.
  3. When the ThinkPad logo is displayed, repeatedly press and release the F12 key. When the Boot Menu window opens, release the F12 key.
  4. Use the arrow keys to select **USB HDD** and then press Enter. The diagnostic program will be launched automatically.
  5. Follow the instructions on the screen to use the diagnostic program.
- If you have created the bootable diagnostic medium on a CD, do the following:
  1. Turn on the computer. If the computer cannot be turned on, go to “Power system checkout” on page 30, and check the power sources. If an error code is displayed, go to “Symptom-to-FRU index” on page 37 for error code descriptions and troubleshooting hints.
  2. Insert the CD into the optical drive.
  3. Restart the computer.
  4. When the ThinkPad logo is displayed, repeatedly press and release the F12 key. When the Boot Menu window opens, release the F12 key.
  5. Use the arrow keys to select **ATAPI CDx** (x: 0, 1, ...) and then press Enter. The diagnostic program will be launched automatically.
  6. Follow the instructions on the screen to use the diagnostic program.

Power system checkout

To verify a symptom, do the following:
1. Turn off the computer.
2. Remove the battery pack.
3. Connect the ac power adapter.
4. Check that power is supplied when you turn on the computer.
5. Turn off the computer.
6. Disconnect the ac power adapter and install the charged battery pack.
7. Check that the battery pack supplies power when you turn on the computer.

If you suspect a power problem, see the appropriate one of the following power supply checkouts:
- “Checking the ac power adapter” on page 30
- “Checking operational charging” on page 31
- “Checking the battery pack” on page 31
- “Checking the backup battery” on page 32

Checking the ac power adapter

You are here because the computer fails only when the ac power adapter is used.

- If the power-on indicator does not turn on, check the power cord of the ac power adapter for correct continuity and installation.
- If the computer does not charge during operation, go to “Checking operational charging” on page 31

To check the ac power adapter, do the following:
1. Unplug the ac power adapter cable from the computer.
2. Measure the output voltage at the plug of the ac power adapter cable. See the following figure:

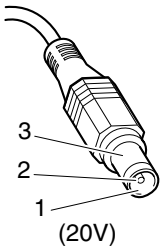

Pin	Voltage (V dc)
1	+20
2	0
3	Ground

Note: Output voltage of pin no.2 of the ac power adapter may different from the one you are servicing.

3. If the voltage is not correct, replace the ac power adapter.
4. If the voltage is acceptable, do the following:
   - Replace the system board.
   - If the problem persists and your system supports PC-Doctor for DOS, go to “FRU tests” on page 27.

Note: Noise from the ac power adapter does not always indicate a defect.

Checking operational charging

To check whether the battery charges properly during operation, use a discharged battery pack or a battery pack that has less than 50% of the total power remaining when installed in the computer.

Perform operational charging. If the battery status indicator or icon does not turn on, remove the battery pack and let it return to room temperature. Reinstall the battery pack. If the charge indicator or icon still does not turn on, replace the battery pack.

If the charge indicator still does not turn on, replace the system board. Then reinstall the battery pack. If it is still not charged, go to the next section.

Checking the battery pack

Battery charging does not start until the Power Manager Battery Gauge shows that less than 96% of the total power remains; under this condition the battery pack can charge to 100% of its capacity. This protects the battery pack from being overcharged or from having a shortened life.

To check your battery, move your cursor to the Power Manager Battery Gauge icon in the icon tray of the Windows taskbar and wait for a moment (but do not click), and the percentage of battery power remaining is displayed. To get detailed information about the battery, double-click the Power Manager Battery Gauge icon.

Note: If the battery pack becomes hot, it may not be able to charge. Remove it from the computer and leave it at room temperature for a while. After it cools down, reinstall and recharge it.

To check the battery pack, do the following:

1. Power off the computer.
2. Remove the battery pack and measure the voltage between battery terminals 1 (+) and 7 (-). See the following figure:

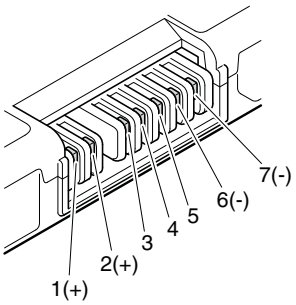

Terminal	Voltage (V dc)
1	+ 0 to + 12.6
7	Ground (-)

3. If the voltage is less than +11.0 V dc, the battery pack has been discharged.

   Note: Recharging will take at least 3 hours, even if the indicator does not turn on.

   If the voltage is still less than +11.0 V dc after recharging, replace the battery.
4. If the voltage is more than +11.0 V dc, measure the resistance between battery terminals 5 and 7. The resistance must be 4 to 30 K Ω. If the resistance is not correct, replace the battery pack. If the resistance is correct, replace the system board.

Checking the backup battery

Do the following:

1. Power off the computer, and unplug the ac power adapter from it.
2. Turn the computer upside down.
3. Remove the battery pack (see “1010 Battery pack” on page 52).
4. Remove the backup battery (see “1130 System board assembly, fan assembly, and backup battery” on page 66).
5. Measure the voltage of the backup battery. See the following figure.

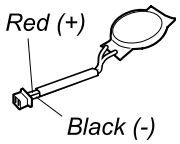

Wire	Voltage (V dc)
Red	+2.5 to +3.2
Black	Ground

- If the voltage is correct, replace the system board.
- If the voltage is not correct, replace the backup battery.
- If the backup battery discharges quickly after replacement, replace the system board.

Chapter 4. Related service information

This chapter presents following information:

- “Restoring the factory contents by using Recovery Disc Set” on page 33
- “Passwords” on page 34
- “Power management” on page 36
- “Symptom-to-FRU index” on page 37

Service Web site:
When the latest maintenance diskette and the system program service diskette become available, they will be posted on http://www.lenovo.com/support.

Restoring the factory contents by using Recovery Disc Set

When the hard disk drive is replaced because of a failure, no product recovery program is on the new drive. In this case, you must use the Recovery Disc Set for the computer. Order the Recovery Disc Set and the drive at the same time so that you can recover the new drive with the pre-installed software when they arrive. For information on which discs to order, see “Recovery discs” on page 91.

The recovery disc set consists of the user instructions and the following set of DVDs to restore the computer to the original factory configuration.

Operating System Recovery Disc (one disc)

This disc restores the Microsoft® Windows operating system. Use this disc to start the recovery process.

Applications and Drivers Recovery Disc (one or more discs)

This disc restores the preinstalled applications and drivers on the computer.

Supplemental Recovery Disc

This disc contains additional content, such as updates to the software that was preinstalled on the computer. Not all recovery disc sets come with a *Supplemental Recovery Disc*.

Notes:

- You must have a DVD drive to use the recovery discs. If you do not have an internal DVD drive, you can use an external USB DVD drive.
- During the recovery process, all data on the drive will be deleted. If possible, copy any important data or personal files that you want to keep onto removable media or a network drive before you start the recovery process.

To restore the computer to the original factory configuration using the recovery disc set, do the following:

Note: Recovery can take one to two hours to complete. The length of time depends on the method you use. If you use recovery discs, the recovery process will take about two hours.

1. Make the CD/DVD drive the first startup device in the startup sequence using the following procedure:
   a. Press and hold down the F1 key, and then turn on the computer. When the logo screen is displayed or if you hear repeating beeps, release the F1 key. The ThinkPad Setup opens.
   b. Use the arrow keys to select **Startup → Boot**.
   c. Select the CD/DVD drive as the **1st Boot Device**.

© Copyright Lenovo 2012

2. Insert the *Operating System Recovery Disc* into the DVD drive.
3. Press F10 to save the ThinkPad Setup configuration changes. Follow the instructions on the screen to begin the recovery process.
4. Select your language and click **Next**.
5. Read the license. If you agree with the terms and conditions, select **I accept these terms and conditions** and then click **Next**. If you do not agree with the terms and conditions, follow the instructions on the screen.
6. Click **Yes** in the displayed window to begin the operating system recovery process.
7. Insert the *Applications and Drivers Recovery Disc* when prompted and then click **OK** to begin the applications and drivers recovery process.
8. If you have a *Supplemental Recovery Disc*, insert it when prompted and click **Yes**. If you do not have a *Supplemental Recovery Disc*, click **No**.
9. When all of the data has been copied from the last disc in the set and has been processed, remove the disc and restart the computer.

   Note: The rest of the recovery process is fully automated and no action is required by you. The computer will restart into the Microsoft Windows desktop several times and you might experience periods when no activity is apparent on the screen for several minutes at a time. This is normal.
10. When the recovery process is complete, the Set Up Windows screen is displayed. Follow the instructions on the screen to complete the Windows setup.
11. After you have completed the Windows setup, you might want to restore the original startup sequence. Start the ThinkPad Setup and then press F9 to restore the default settings. Press F10 to save and exit the ThinkPad Setup.

Note: After restoring a drive to the factory default settings, you might need to reinstall some device drivers.

Passwords

As many as three passwords might be needed for a ThinkPad notebook computer: the power-on password, the hard disk password), and the supervisor password.

If any of these passwords has been set, a prompt for it will be displayed on the screen whenever the computer is turned on. The computer does not start until the password is entered.

Note: If only a supervisor password is set, the password prompt will not be displayed when the operating system is started.

Power-on password

A power-on password protects the system from being powered on by an unauthorized person. The password must be turned on before the operating system can be started. For instructions on how to remove the power-on password, see “How to remove the power-on password” on page 35.

Hard disk password

There are two hard disk passwords:

- User hard disk password - for the user
- Master hard disk password - for the system administrator, who can use it to get access to the hard disk even if the user has changed the user HDP

Note: There are two modes for the hard disk password: **User only** and **Master + User**. The **Master + User** mode requires two hard disk passwords; the system administrator enters both in the same operation. The system administrator then provides the user hard disk password to the system user.

Attention: If the user HDP has been forgotten, check whether a master hard disk password has been set. If a master hard disk password has been set, it can be used to access the hard disk drive. If no master hard disk password is available, neither Lenovo nor Lenovo authorized service technicians provide any services to reset either the user hard disk password or the master hard disk password, or to recover data from the hard disk drive. The hard disk drive can be replaced for a scheduled fee.

For instructions on how to remove the hard disk password, see “How to remove the hard disk password” on page 35.

Supervisor password

A supervisor password protects the system information stored in the ThinkPad Setup. The user must enter the supervisor password in order to get access to the ThinkPad Setup and change the system configuration.

Attention: If the supervisor password has been forgotten and cannot be made available to the service technician, there is no service procedure to reset the password. The system board must be replaced for a scheduled fee.

How to remove the power-on password

To remove the power-on password, do one of the following:

(A) If no supervisor password has been set, do the following to remove the power-on password:

1. Turn off the computer.
2. Remove the battery pack. For instructions on how to remove the battery pack, see “1010 Battery pack” on page 52.
3. Remove the backup battery. For instructions on how to remove the backup battery, see “1130 System board assembly, fan assembly, and backup battery” on page 66.
4. Turn on the computer and wait until the POST ends. After the POST ends, the password prompt will not be displayed. The power-on password has been removed.
5. Reinstall the backup battery and the battery pack.

(B) If a supervisor password has been set and is known to the service technician, do the following to remove the power-on password:

1. Turn on the computer.
2. When the ThinkPad logo is displayed, , immediately press F1 to enter ThinkPad Setup.
3. Select **Security**.
4. Select **Password**.
5. Select **Power-On Password**.
6. Type the current supervisor password in the **Enter Current Password** field. Then leave the **Enter New Password** field blank, and press Enter twice.
7. In the Changes have been saved window, press Enter.
8. Press F10 to save changes and exit the ThinkPad Setup program.

How to remove the hard disk password

Attention: If **User only** mode is selected and the user hard disk password has been forgotten and cannot be made available to the service technician, neither Lenovo nor Lenovo authorized service technicians provide any services to reset the user hard disk password or to recover data from the hard disk drive. The hard disk drive can be replaced for a scheduled fee.

To remove a user hard disk password that has been forgotten, when the supervisor password and the master hard disk password are known, do the following:

1. Turn on the computer.
2. When the ThinkPad logo comes up, immediately press F1 to enter ThinkPad Setup.
3. Select **Security**.
4. Select **Password**.
5. Select **Hard-disk *x* password**, where *x* is the letter of the hard disk drive. A pop-up window opens.
6. Select **Master HDP**, where HDP stands for hard disk password.
7. Type the current master hard disk password in the **Enter Current Password** field. Then leave the **Enter New Password** field blank, and press Enter twice.
8. Press F10 to save changes and exit the ThinkPad Setup program. The user hard disk password and the master hard disk password have been removed.

Power management

To reduce power consumption, the computer has three power management modes: screen blank, sleep (standby in Windows XP), and hibernation.

Screen blank mode

To put the computer into screen blank mode, do as follows:

1. Right-click the Power Manager Battery Gauge in the task bar.
2. Select **Power off display (keep current power plan)** (in Windows XP, **keep current power scheme**).

To end screen blank mode and resume normal operation, press any key.

Sleep (standby) mode

When the computer enters sleep (standby) mode, the following events occur in addition to what occurs in screen blank mode:
- The LCD is powered off.
- The hard disk drive is powered off.
- The CPU stops.

In certain circumstances, the computer goes into sleep (standby) mode automatically:

- If a “suspend time” has been set on the timer, and the user does not do any operation with the keyboard, the TrackPoint, the hard disk, the parallel connector, or the diskette drive within that time.

Note: Even if you do not set the low-battery alarm, the charge indicator notifies you when the battery is low, and then the computer enters the power-saving mode automatically.

To cause the computer to return from sleep (standby) mode and resume operation, do one of the following:
- Open the LCD cover.
- Turn on the power switch.

Also, in either of the following events, the computer automatically returns from sleep (standby) mode and resumes operation:

- The ring indicator (RI) is signaled by a serial device or a PC Card device.
- The time set on the resume timer elapses.

  Note: The computer does not accept any input immediately after it enters sleep (standby) mode. Wait a few seconds before taking any action to reenter operation mode.

Hibernation mode

In hibernation mode, the following occurs:

- The system status, RAM, VRAM, and setup data are stored on the hard disk.
- The system is powered off.

If you have defined one of the following actions as the event that causes the system to go into hibernation mode, perform that action.

- Closing the lid.
- Pressing the power button.

Also, the computer goes into hibernation mode automatically in either of the following conditions:

- If a “hibernation time” has been set on the timer, and if the user does not do any operation with the keyboard, the TrackPoint, the hard disk drive, the parallel connector, or the diskette drive within that time.
- If the timer conditions are satisfied in suspend mode.

When the power is turned on, the computer returns from hibernation mode and resumes operation. The hibernation file in the boot record on the hard disk drive is read, and system status is restored from the hard disk drive.

Symptom-to-FRU index

This section contains following information:

- “Numeric error codes” on page 38
- “Error messages” on page 39
- “No-beep symptoms” on page 39
- “LCD-related symptoms” on page 40
- “Intermittent problems” on page 40
- “Undetermined problems” on page 41

The symptom-to-FRU index in this section lists symptoms and errors and their possible causes. The most likely cause is listed first, in boldface type.

Note: Do the FRU replacement or other actions in the sequence shown in the column headed “FRU or action, in sequence.” If replacing a FRU does not solve the problem, put the original part back in the computer. Do not replace a nondefective FRU.

This index can also help you determine, during regular servicing, what FRUs are likely to need to be replaced next.

A numeric error is displayed for each error detected in POST or system operation. In the displays, **n** can be any number.

If no numeric code is displayed, check the narrative descriptions of symptoms. If the symptom is not described there, go to “Intermittent problems” on page 40.

Note: For a device not supported by diagnostic codes in the ThinkPad Notebooks, see the manual for that device.

Numeric error codes

Table 2. Numeric error codes

Symptom or error	FRU or action, in sequence
0177 Bad SVP data, stop POST task-The checksum of the supervisor password in the EEPROM is not correct.	**System board.**
0182 Bad CRC2. Enter the ThinkPad Setup program and load Setup defaults. - The checksum of the CRS2 setting in the EEPROM is not correct.	1. **Run the ThinkPad Setup program. Press Fn+F9, then Enter to load the default setting. Then save the current setting by pressing Fn+F10.** 2. System board.
0183 Bad CRC of Security Settings in EFI Variable. Enter the ThinkPad Setup program.	
0187 EAIA data access error - The access to EEPROM is failed.	**System board.**
0188 Invalid RFID Serialization Information Area.	**System board.**
0189 Invalid RFID configuration information area - The EEPROM checksum is not correct.	**System board.**
0190 Critical low-battery error	1. **Charge the battery pack.** 2. Battery pack.
0191 System Security - Invalid Remote Change requested.	1. **Run the ThinkPad Setup program, and then save current setting by pressing Fn+F10.** 2. System board.
0199 System Security - Security password retry count exceeded.	1. **Run the ThinkPad Setup program, and then save the current setting by pressing Fn+F10.** 2. System board.
0251 System CMOS checksum bad - Default configuration used.	1. **Charge the backup battery for more than 8 hours by connecting the ac power adapter.** 2. Replace the backup battery and run the ThinkPad setup program to reset the time and date.
0271 Real-time clock error. Check date and time settings.	**Run the ThinkPad Setup program to reset the time and date.**
2100 Detection error on HDD	1. **Reseat the hard disk drive.** 2. Main hard disk drive. 3. System board.
2110 Read error on HDD	1. **Reseat the hard disk drive.** 2. Main hard disk drive. 3. System board.
2200 Machine Type and Serial Number are invalid.	**System board.**
2201 Machine UUID is invalid.	**System board.**

Error messages

Table 3. Error messages

Symptom or error (beeps, if any)	FRU or action, in sequence
Fan error.	1. **Fan**. 2. Thermal grease. 3. System board.
Thermal sensing error.	**System board**.
This system does not support batteries that are not genuine Lenovo-made or authorized. This system will continue to boot, but may not charge unauthorized batteries. **Attention:** Lenovo has no responsibility for the performance or safety of unauthorized batteries, and provides no warranties for failures or damage arising out of their use.	**Replace the battery**.

Beep symptoms

Table 4. Beep symptoms

Symptom or error	FRU or action, in sequence
One beep and a blank, unreadable, or flashing LCD.	1. **Reseat the LCD connector**. 2. LCD assembly. 3. External CRT. 4. System board.
One long and two short beeps, and a blank or unreadable LCD.	1. **System board**. 2. LCD assembly. 3. DIMM.
Two short beeps with error codes.	**POST error. See “Numeric error codes” on page 38.**
Two short beeps and a blank screen.	1. **System board**. 2. DIMM.
Three short beeps, pause, three more short beeps, and one short beep.	1. **DIMM**. 2. System board.
One short beep, pause, three short beeps, pause, three more short beeps, and one short beep.	
Only the cursor appears.	**Reinstall the operating system**.
Four cycles of four short beeps and a blank screen.	**System board** (security chip)
Five short beeps and a blank screen.	**System board**

No-beep symptoms

Table 5. No-beep symptoms

Symptom or error	FRU or action, in sequence
No beep, power-on indicator on, LCD blank, and no POST.	1. **Make sure that every connector is connected tightly and correctly**. 2. DIMM. 3. System board.
No beep, power-on indicator on, and LCD blank during POST.	1. **Reseat DIMM**. 2. System board.

Table 5. No-beep symptoms (continued)

Symptom or error	FRU or action, in sequence
The power-on password prompt appears.	A power-on password or a supervisor password is set. Type the password and press **Enter**.
The hard-disk password prompt appears.	A hard-disk password is set. Type the password and press **Enter**.

LCD-related symptoms

Important: The TFT LCD for the notebook computer contains many thin-film transistors (TFTs). The presence of a small number of dots that are missing, discolored, or always lighted is characteristic of TFT LCD technology, but excessive pixel problems can cause viewing concerns.

If the LCD you are servicing has two or less visible defective pixels, it should not be considered faulty. However, if the LCD has three or more visible defective pixels, it will be deemed as defective by Lenovo and it should be replaced.

Notes:
- This policy applies to all ThinkPad Notebooks purchased on 1 January, 2008 or later.
- Lenovo will not provide replacement if the LCD is within specification as we cannot guarantee that any replacement LCD will have zero pixel defects.
- One pixel consists of R, G, B sub-pixels.

Table 6. LCD-related symptoms

Symptom or error	FRU or action, in sequence
No beep, power-on indicator on, and a blank LCD during POST.	**System board**.
• LCD backlight not working. • LCD too dark. • LCD brightness cannot be adjusted. • LCD contrast cannot be adjusted.	1. **Reseat the LCD connectors**. 2. LCD assembly. 3. System board.
• LCD screen unreadable. • Characters missing pixels. • Screen abnormal. • Wrong color displayed.	1. **See important note for "LCD-related symptoms."** 2. Reseat all LCD connectors. 3. LCD assembly. 4. System board.
Horizontal or vertical lines displayed on LCD.	**LCD assembly**.

Intermittent problems

Intermittent system hang problems can be due to a variety of causes that have nothing to do with a hardware defect, such as cosmic radiation, electrostatic discharge, or software errors. FRU replacement should be considered only when a problem recurs.

When analyzing an intermittent problem, do the following:
1. Run the diagnostic test for the system board in loop mode **at least 10 times**.
2. If no error is detected, do **not** replace any FRUs.
3. If any error is detected, replace the FRU shown by the FRU code. Rerun the test to verify that no more errors exist.

Undetermined problems

If the diagnostic tests did not identify the adapter or device that has failed, if wrong devices are installed, or if the system simply is not operating, follow these procedures to isolate the failing FRU (do not isolate FRUs that have no defects).

Verify that all attached devices are supported by the computer.

Verify that the power supply being used at the time of the failure is operating correctly. (See “Power system checkout” on page 30)

1. Turn off the computer.
2. Visually check each FRU for damage. Replace any damaged FRU.
3. Remove or disconnect all of the following devices:
   a. Non-ThinkPad devices
   b. Printer, mouse, and other external devices
   c. Battery pack
   d. Hard disk drive
   e. External diskette drive or optical drive
   f. DIMM
   g. PC Cards
4. Turn on the computer.
5. Determine whether the problem has been solved.
6. If the problem does not recur, reconnect the removed devices one at a time until you find the failing FRU.
7. If the problem remains, replace the following FRUs one at a time (do not replace a nondefective FRU):
   a. System board
   b. LCD assembly

Chapter 5. Status indicators

This chapter presents the system status indicators that show the status of the computer.

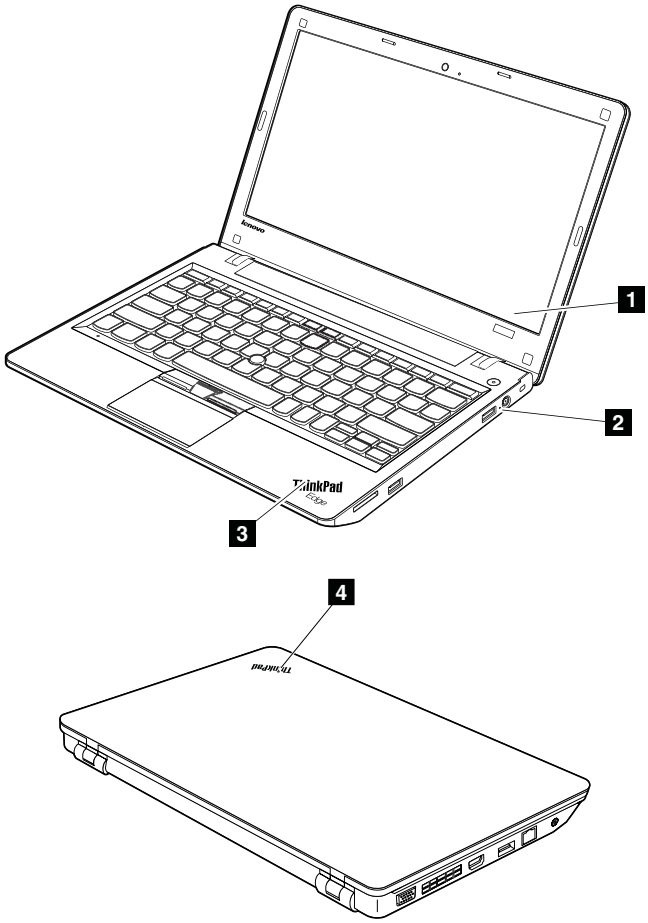

Table 7. Status indicators

Indicator	Meaning
1 Caps lock	When the Caps Lock mode is enabled, the Caps Lock indicator is displayed on the screen. You can enter all alphabetic characters (A-Z) in uppercase without pressing the Shift key.
1 Wireless status	Press F9 to enable or disable the wireless features. You can quickly change the power state of each feature on the list.
2 Power status	• **Green:** The ac power adapter is connected. If a battery is installed on the computer, it is charged when this indicator is on. • **Off:** The ac power adapter is not connected.

© Copyright Lenovo 2012

Table 7. Status indicators (continued)

Indicator	Meaning
3 Sleep (standby) status	The illuminated dot in the ThinkPad logo on the outer lid of the computer and on the palm rest works as a system status indicator: it shows whether the computer is in sleep (standby), hibernation, or normal mode. • **Red:** The computer is on (in normal mode). • **Fast blinking red:** The computer is entering sleep (standby) or hibernation mode. • **Slow blinking red:** The computer is in sleep (standby) mode. • **Off:** The computer is off or in hibernation mode.
4 Sleep (standby) status	

Chapter 6. Special keys

The computer comes withseveral special keys at the upper row of the keyboard. To use each function, directly press the desired key.

The following table explains the function of each special key.

Table 8. Special keys

Special key	Description
Speaker mute (F1)	If you mute the sound and then turn off the computer, the sound will remain muted when you turn on the computer again. To turn on the sound, press the speaker volume up or speaker volume down key.
Speaker volume down (F2)	
Speaker volume up (F3)	
Microphone mute (F4)	Press the microphone mute key to mute or unmute all of the recording devices.
Launching the camera and audio settings (F5)	If you press F5, the camera and audio settings window will open and the camera preview is turned on. From this window, you can change the camera and audio settings.
Switching the display output location (F6)	Press this key to switch between the computer display and an external monitor. The following options will be displayed: • Computer display only (LCD) • Computer display and external monitor (same image) • Computer display and external monitor (the Extend desktop function) • External monitor only **Note:** To switch between the computer display and an external monitor, the Windows+P key combination is also available.
Display brightness down (F7)	When you press this key, the computer display becomes dimmer. The purpose of this method is to change the brightness level temporarily. To change the default brightness level, use the Power Manager program, or go into **Control Panel → Performance and Maintenance → Power Options** and make changes as desired.
Display brightness up (F8)	When you press this key, the computer display becomes brighter. The purpose of this method is to change the brightness level temporarily. To change the default brightness level, use the Power Manager program, or go into **Control Panel → Performance and Maintenance → Power Options** and make changes as desired.

© Copyright Lenovo 2012

Table 8. Special keys (continued)

Special key	Description
Wireless radio control (F9)	Press this key to enable or disable the built-in wireless networking features. When you press this key, a list of wireless features is displayed. You can quickly change the state of each feature on the list. **Notes:** If you want to use this button to enable or disable the wireless features, the following device drivers must be installed on your computer beforehand: • Power Management driver • OnScreen Display Utility • Wireless device drivers
Previous track/scene (F10)	Use these keys for multimedia control.
Play/Pause (F11)	
Next track/scene (F12)	

Chapter 7. FRU replacement notices

External CRU statement to customers:
Some problems with your product can be resolved with a replacement part you can install yourself, called a “Customer Replaceable Unit” or “CRU.” Some CRUs are designated as Self-service CRUs and others are designated as Optional-service CRUs. *Installation of Self-service CRUs is your responsibility; you may request that Lenovo installs an Optional-service CRU according to the warranty service for your product.* Where you are installing the CRU, Lenovo will ship the CRU to you. CRU information and replacement instructions are shipped with your product and are available from Lenovo at any time upon request. You may find a list of CRUs in the publications that ship with your product or at http://www.lenovo.com/CRUs. You may be required to return the defective part that is replaced by the CRU. When return is required: (1) return instructions, a prepaid shipping label, and a container will be included with the replacement CRU; and (2) you may be charged for the replacement CRU if Lenovo does not receive the defective part within thirty (30) days of your receipt of the replacement CRU. See your Lenovo Limited Warranty documentation for full details.

This chapter presents notices related to removing and replacing parts. Read this chapter carefully before replacing any FRU.

Screw notices

Loose screws can cause a reliability problem. In ThinkPad notebook computers, this problem is addressed with special nylon-coated screws that have the following characteristics:

- They maintain tight connections.
- They do not easily come loose, even with shock or vibration.
- They are harder to tighten.

Do the following when you service the computer:

- Keep the screw kit in your tool bag. For the part number of the screw kit, see “Miscellaneous parts” on page 89.
- It is recommended to use new screws.
- It is recommended to use each screw only once.
- Use a torque screwdriver if you have one.

Tighten screws as follows:

- **Plastic to plastic**

  Turn an additional angle of 90 degrees after the screw head touches the surface of the plastic part.

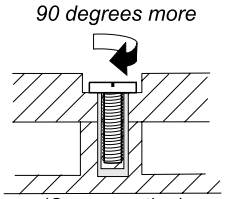

- **Logic card to plastic**

  Turn an additional angle of 180 degrees after the screw head touches the surface of the logic card.

© Copyright Lenovo 2012

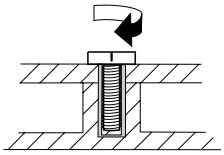

Notes:

- If you have a torque driver, refer to the **Torque** column in the screw information table for each step.
- Make sure that you use the correct screw. It is recommended to use new screws for replacements. If you have a torque screwdriver, tighten all screws firmly to the torque specified in the screw information table for each step.
- Ensure torque screwdrivers are calibrated correctly following country specifications.

Retaining serial numbers

This topic provides instructions on the following:

- "Restoring the serial number of the system unit" on page 48
- "Retaining the UUID" on page 49
- "Reading or writing the ECA information" on page 49

Restoring the serial number of the system unit

When the computer was manufactured, the EEPROM on the system board was loaded with the serial numbers of the system and all major components. These numbers need to remain the same throughout the life of the computer.

If you replace the system board, you must restore the serial number of the system board to its original value.

Before replacing the system board, save the original serial number by doing the following:

1. Install the LENOVO ThinkPad Hardware Maintenance Diskette Version 1.76 or later, and restart the computer.
2. From the main menu, select **1. Set System Identification**.
3. Select **2. Read S/N data from EEPROM**.

The serial number of each device in your computer is displayed. The serial number of the system board is listed is listed as **20: Serial number**.

Write down that number.

Note: The serial number of the system board is also written on the label attached to the bottom of the computer.

After you have replaced the system board, restore the serial number by doing the following:

1. Install the LENOVO ThinkPad Hardware Maintenance Diskette Version 1.76 or later and restart the computer.
2. From the main menu, select **1. Set System Identification**.
3. Select **1. Add S/N data from EEPROM**. Follow the instructions on the screen.

If the MTM and Product ID numbers differ from each other on the rear label, use what is shown for the Product ID field. See example below:

MTM on the rear label:

TTTT-CTO S/N SSSSSSS

Product ID on the rear label:

TTTT-MMM (Use this number when setting the serial number)

In the example, the Serial Number to be input is “1STTTTMMMSSSSSSS”.

Retaining the UUID

The Universally Unique Identifier (UUID) is a 128-bit number uniquely assigned to your computer at production and stored in the EEPROM of your system board. The algorithm that generates the number is designed to provide unique IDs until the year A.D. 3400. No two computers in the world have the same number.

When you replace the system board, you must set the UUID on the new system board by doing the following:

1. Install the LENOVO ThinkPad Hardware Maintenance Diskette Version 1.76 or later, and restart the computer.
2. From the main menu, select **4. Assign UUID**. A new UUID is created and written. If a valid UUID already exists, it will not be overwritten.

Reading or writing the ECA information

Information on Engineering Change Announcements (ECA) is stored in the EEPROM of the system board. The electronic storage of this information simplifies the procedure to check if an engineering change has been previously applied to a computer.

To check what engineering changes have been previously applied to the machine, use the ECA information read/write function on the LENOVO ThinkPad Hardware Maintenance Diskette Version 1.76 or later.

1. Insert the LENOVO ThinkPad Hardware Maintenance Diskette Version 1.76 or later, and restart the computer.
2. From the main menu, select **6. Set ECA Information**.
3. To read the ECA information, select **2. Read ECA/rework number from EEPROM** and follow the instruction.
4. To read the box build date, select **5. Read box build date from EEPROM**, and follow the instructions on the computer.

After an engineering change is applied to the machine, the EEPROM must be updated. Use the LENOVO ThinkPad Hardware Maintenance Diskette Version 1.76 or later to update the EEPROM.

Note: Only the ECA number is stored in the EEPROM. The machine type of the ECA is assumed to be the same as the machine type of the machine that had the engineering change applied to it.

1. Insert the LENOVO ThinkPad Hardware Maintenance Diskette Version 1.76 or later, and restart the computer.
2. From the main menu, select **6. Set ECA Information**.
3. To write ECA information, select **1. Write ECA/rework number from EEPROM**, and follow the instruction.
4. To write box build date, select **4. Write box build date from EEPROM**, and follow the instruction on the screen.

If the system board is being replaced, try to read the ECA information from the old system board and transfer the information to the new system board. If the system board is inoperable, this will not be possible.

Chapter 8. Removing and replacing a FRU

External CRU statement to customers:
Some problems with your product can be resolved with a replacement part you can install yourself, called a “Customer Replaceable Unit” or “CRU.” Some CRUs are designated as Self-service CRUs and others are designated as Optional-service CRUs. *Installation of Self-service CRUs is your responsibility; you may request that Lenovo installs an Optional-service CRU according to the warranty service for your product.* Where you are installing the CRU, Lenovo will ship the CRU to you. CRU information and replacement instructions are shipped with your product and are available from Lenovo at any time upon request. You may find a list of CRUs in the publications that ship with your product or at http://www.lenovo.com/CRUs. You may be required to return the defective part that is replaced by the CRU. When return is required: (1) return instructions, a prepaid shipping label, and a container will be included with the replacement CRU; and (2) you may be charged for the replacement CRU if Lenovo does not receive the defective part within thirty (30) days of your receipt of the replacement CRU. See your Lenovo Limited Warranty documentation for full details.

This chapter presents directions and drawings for use in removing and replacing a FRU. Be sure to observe the following general rules:

1. Do not try to service any computer unless you have been trained and certified. An untrained person runs the risk of damaging parts.
2. Before replacing any FRU, review Chapter 7 “FRU replacement notices” on page 47.
3. Begin by removing any FRUs that have to be removed before replacing the failing FRU. Such FRUs are listed in each FRU replacement section. Remove them in the order in which they are listed.
4. Follow the correct sequence in the steps for removing a FRU, as given in the drawings by the numbers in square callouts.
5. When turning a screw to replace a FRU, turn it in the direction as given by the arrow in the drawing.
6. When removing a FRU, move it in the direction as given by the arrow in the drawing.
7. To put the new FRU in place, reverse the removal procedure and follow any notes that pertain to replacement. For information about connecting and arranging internal cables, see Chapter 9 “Locations” on page 79.
8. When replacing a FRU, use the correct screw(s) as shown in the procedures.

DANGER

Before removing any FRU, turn off the computer, unplug all power cords from electrical outlets, remove the battery pack, and then disconnect any interconnecting cables.

Attention: After replacing a FRU, do not turn on the computer until you have made sure that all screws, springs, and other small parts are in place and none are loose inside the computer. Verify this by shaking the computer gently and listening for rattling sounds. Metallic parts or metal flakes can cause electrical short circuits.

Attention: The system board is sensitive to, and can be damaged by, electrostatic discharge. Before touching it, establish personal grounding by touching a ground point with one hand or by using an electrostatic discharge (ESD) strap (P/N 6405959).

Before servicing ThinkPad Edge E120 and E125 models

SomeThinkPad Edge E120 and E125 models you are servicing might have the SIM card that the customer has installed.

© Copyright Lenovo 2012

If the computer you are servicing has the SIM card, remove it before you start the servicing.

To remove the SIM card, you need to remove the battery pack first. (See “1010 Battery pack” on page 52.)

After you finish the servicing, make sure that you insert the card back into the slot firmly.

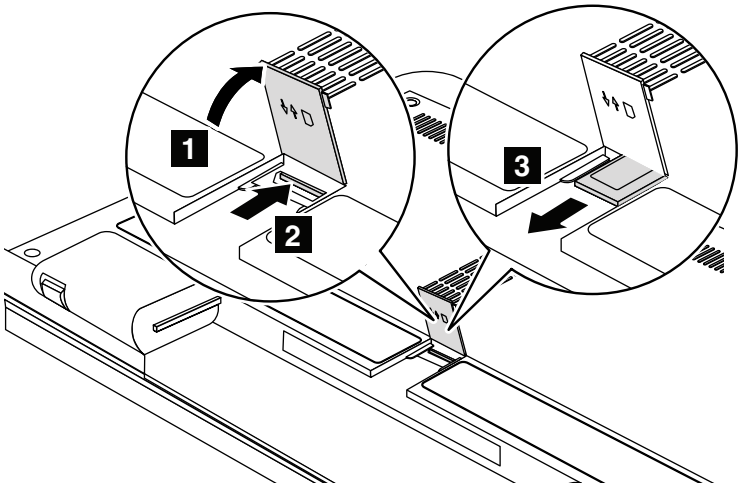

1010 Battery pack

Important notice for replacing a battery pack:

- The Lenovo ThinkVantage Toolbox (in Windows 7) and Lenovo Solution Center (in Windows 7) have an automatic battery diagnostic that determines if the battery pack is defective. A battery pack FRU should not be replaced unless this diagnostic shows that the battery is defective.
- The only exception to this is if the battery pack is physically damaged or a customer is reporting a possible safety issue.
- If Lenovo ThinkVantage Toolbox is not installed in the computer, the customer should download this program before a non-physically damaged battery pack is replaced. Note that the replacement of a physically damaged battery pack is not covered by the warranty.

Removal steps of battery pack

DANGER

Use only the battery specified in the parts list for your computer. Any other battery could ignite or explode.

Unlock the battery latch **1**. Holding the battery lock lever in the unlocked position and remove the battery pack in the direction shown by arrow **2**.

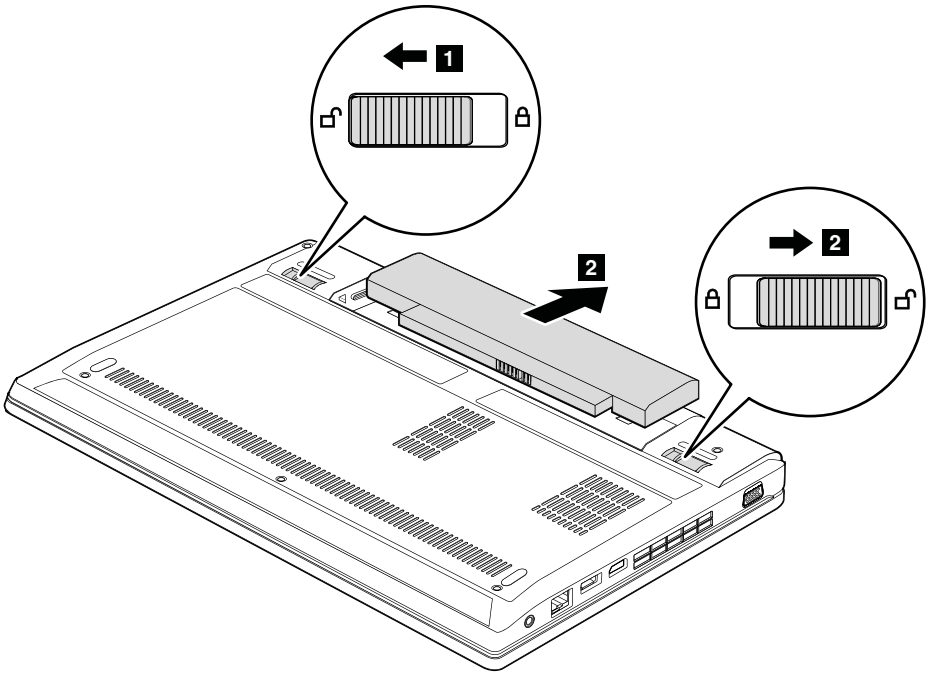

When installing: Install the battery pack in the slot, and make sure that the battery latch is in the locked position.

1020 Bottom slot cover

For access, remove this FRU:

- “1010 Battery pack” on page 52

Removal steps of bottom slot cover

Note: Loosen the screws **1**, but do not remove them.

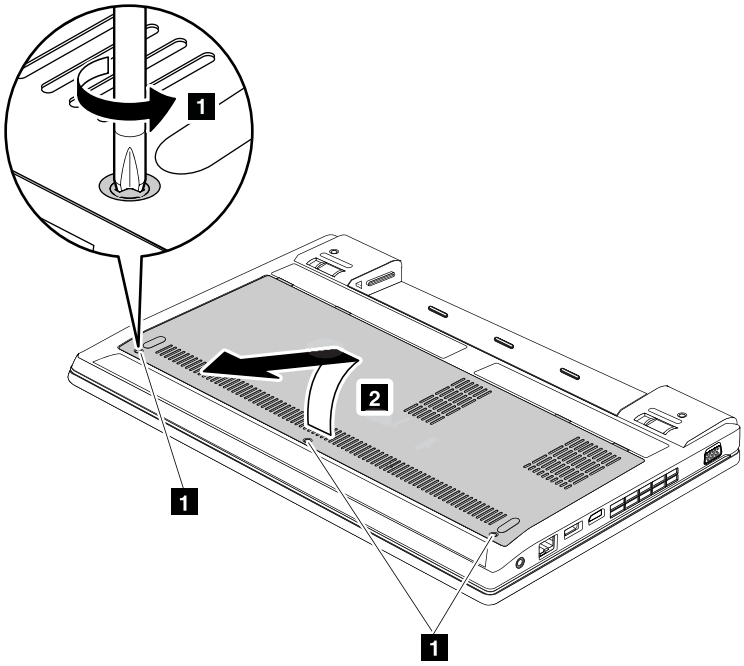

1030 Memory modules

For access, remove these FRUs in order:

- “1010 Battery pack” on page 52
- “1020 Bottom slot cover” on page 53

Removal steps of memory modules

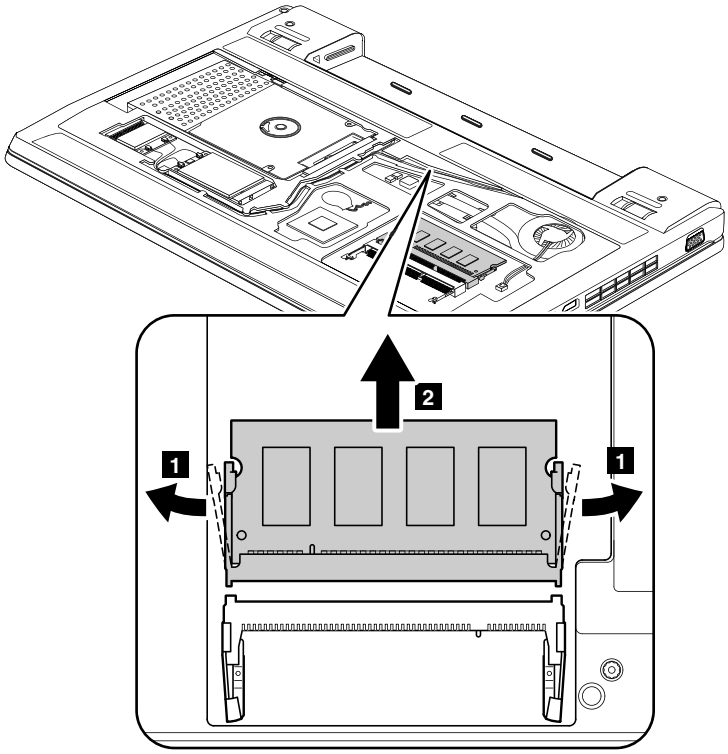

Note: If only one memory module is used on the computer you are servicing, the card must be installed in the upper SLOT a, but not in the lower SLOT b.

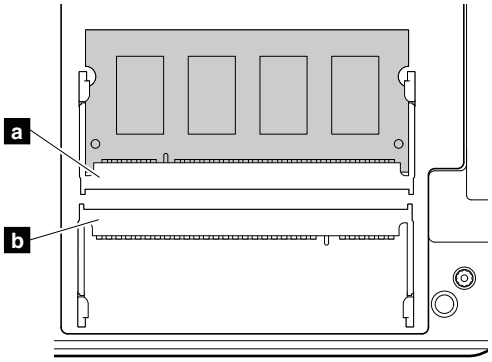

When installing: Insert the notched end of the memory module into the socket. Press the memory module firmly, and pivot it until it snaps into place. Make sure that it is firmly installed in the slot and does not move easily.

1040 Hard disk drive or solid state drive assembly

For access, remove these FRUs in order:

- “1010 Battery pack” on page 52
- “1020 Bottom slot cover” on page 53

Attention:

- Do not drop the drive or apply any physical shock to it. The drive is sensitive to physical shock. Improper handling can cause damage and permanent loss of data.
- Before removing the drive, have the user make a backup copy of all the information on it if possible.
- Never remove the drive while the computer is operating or is in suspend mode.

Removal steps of hard disk drive or solid state drive

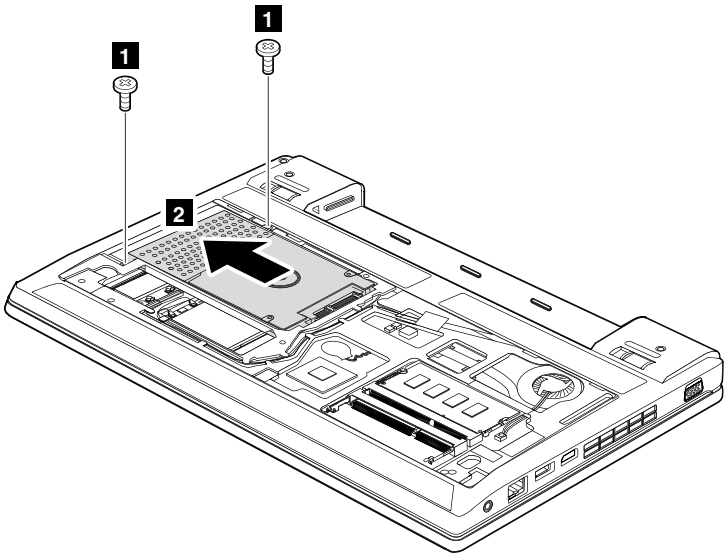

Step	Screw (quantity)	Color	Torque
1	M2 × 5 mm, wafer-head, nylon-coated (2)	Black	0.181 Nm (1.85 kgfcm)

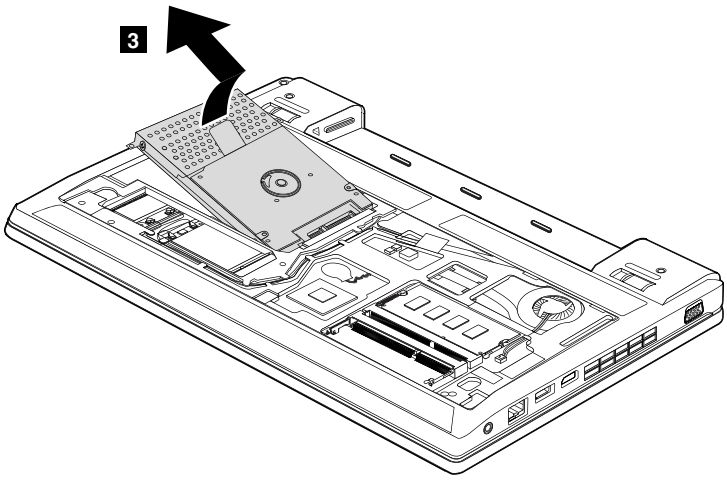

When installing: Make sure the hard disk drive or solid state drive assembly is attached firmly.

Removal steps of the hard disk drive or solid state drive bracket

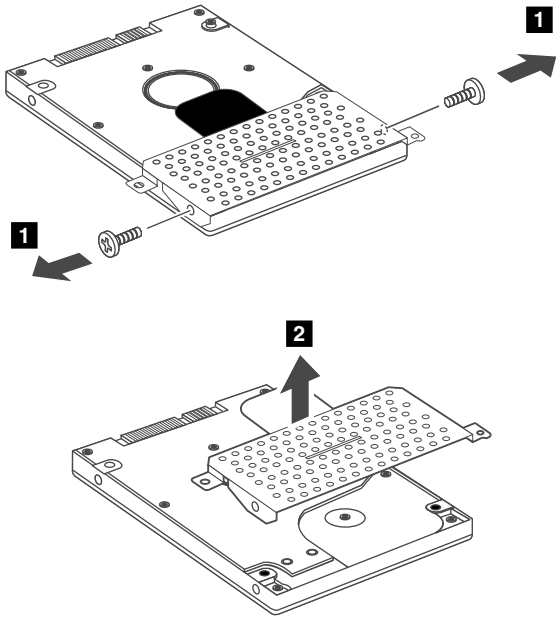

Step	Screw (quantity)	Color	Torque
1	M3 × 2.8 mm, wafer-head, nylon-coated (2)	Black	0.392 Nm (4 kgfcm)

1050 PCI Express Mini Card for wireless LAN

For access, remove these FRUs in order:
- “1010 Battery pack” on page 52
- “1020 Bottom slot cover” on page 53

Removal steps of PCI Express Mini Card for wireless LAN

In step 1, unplug the jacks by using the removal tool antenna RF connector (P/N: 08K7159) or pick the connectors with your fingers and gently unplug them in the direction of the arrows.

Note: Some models might have a third white antenna cable.

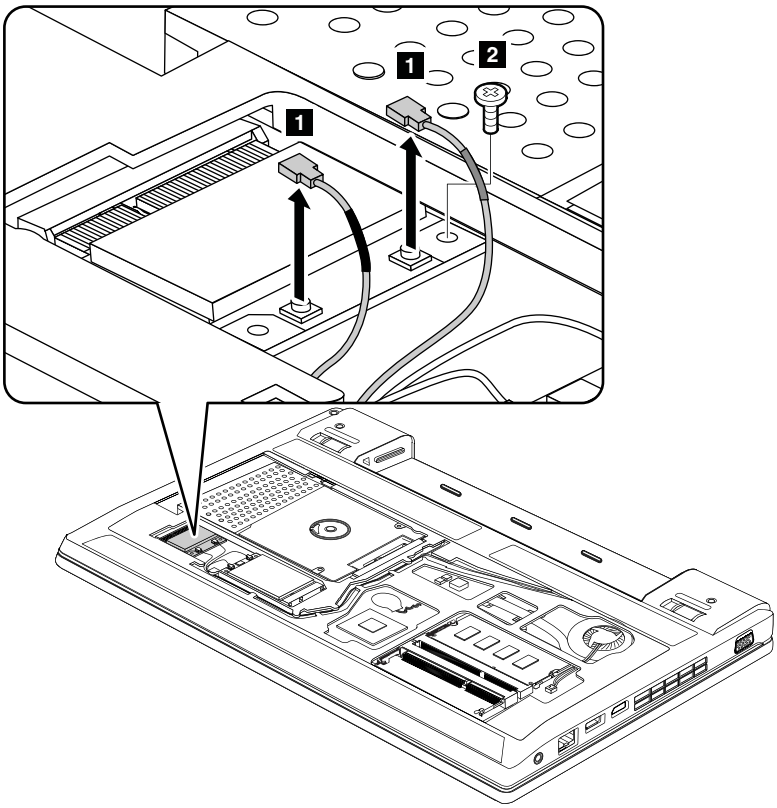

Step	Screw (quantity)	Color	Torque
2	M2 × 3 mm, wafer-head, nylon-coated (1)	Black	0.181 Nm (1.85 kgfcm)

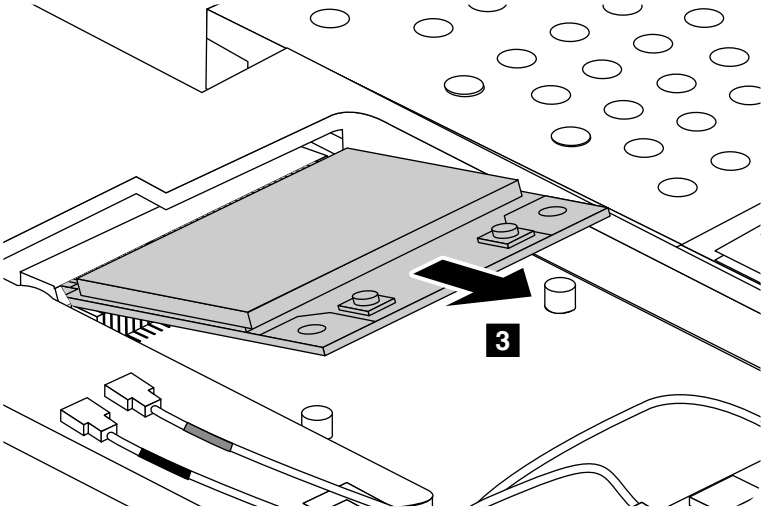

When installing: Plug the gray cable into the jack marked **MAIN** or **M**, and the black cable into the jack marked **AUX** or **A** on the card.

Note: In models with a wireless LAN card that has three antenna connectors, plug the gray cable (MAIN) into the jack marked **TR1**, the white cable (third) into the jack marked **RO** or **TR3**, and the black cable (AUX) into the jack marked **TR2** on the card.

1060 PCI Express Mini Card for wireless WAN

For access, remove these FRUs in order:

- “1010 Battery pack” on page 52
- “1020 Bottom slot cover” on page 53

Removal steps of PCI Express Mini Card for wireless WAN

In step **1**, unplug the jacks by using the removal tool antenna RF connector (P/N: 08K7159) or pick the connectors with your fingers and gently unplug them in the direction of the arrows.

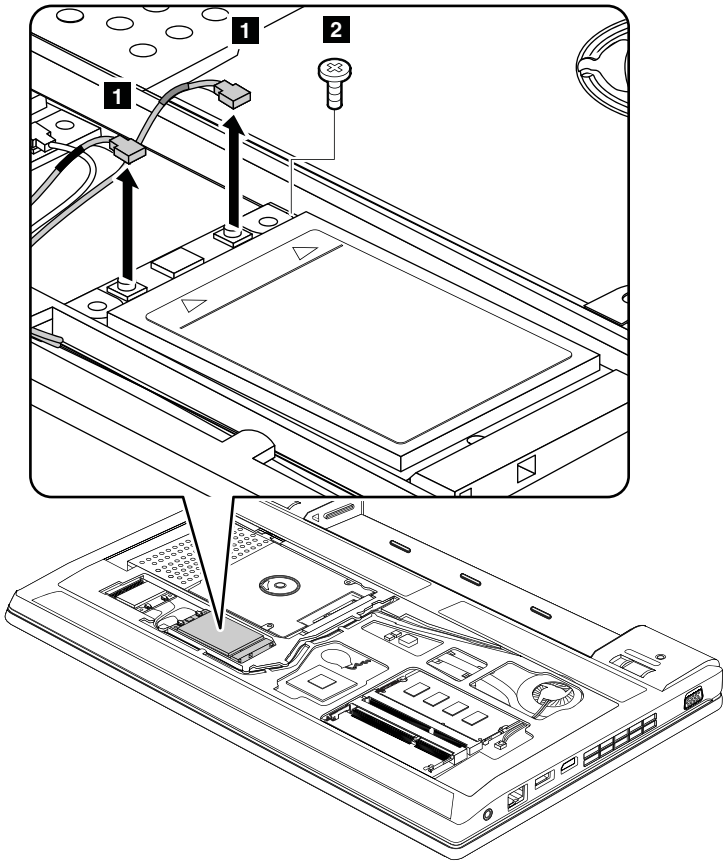

When installing: Plug the orange cable into the jack marked **MAIN**, and the blue cable into the jack marked **AUX** on the card.

Step	Screw (quantity)	Color	Torque
2	M2 × 3 mm, wafer-head, nylon-coated (1)	Black	0.181 Nm (1.85 kgfcm)

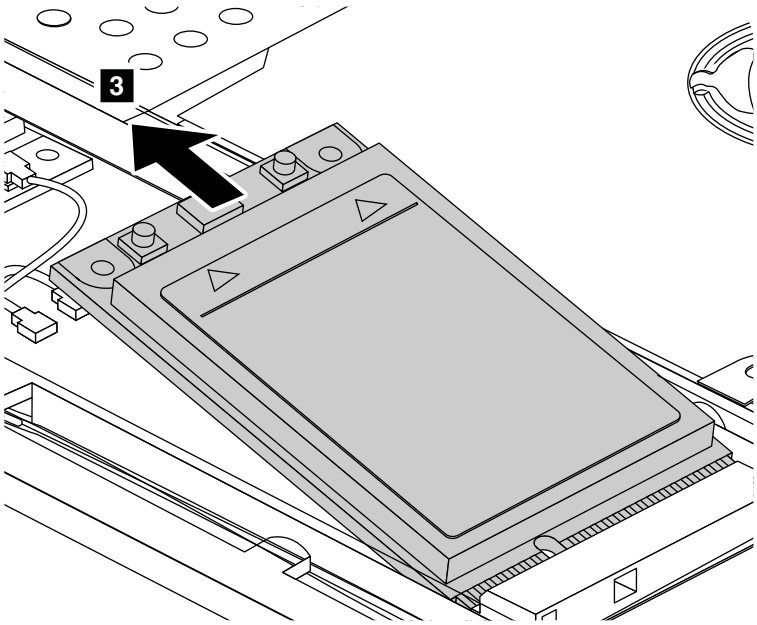

1070 Keyboard

For access, remove these FRUs in order:

- “1010 Battery pack” on page 52
- “1020 Bottom slot cover” on page 53

Removal steps of keyboard

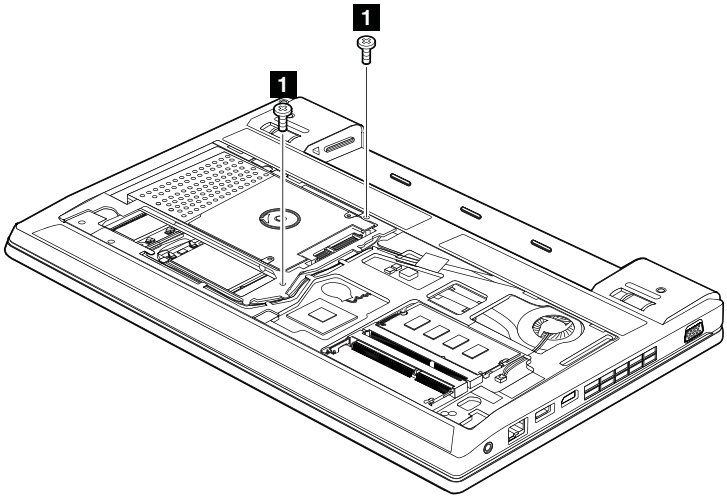

When installing: Make sure the screws have been fastened to secure to keyboard.

Step	Screw (quantity)	Color	Torque
1	M2 × 8 mm, wafer-head, nylon-coated (2)	Black	0.181 Nm (1.85 kgfcm)

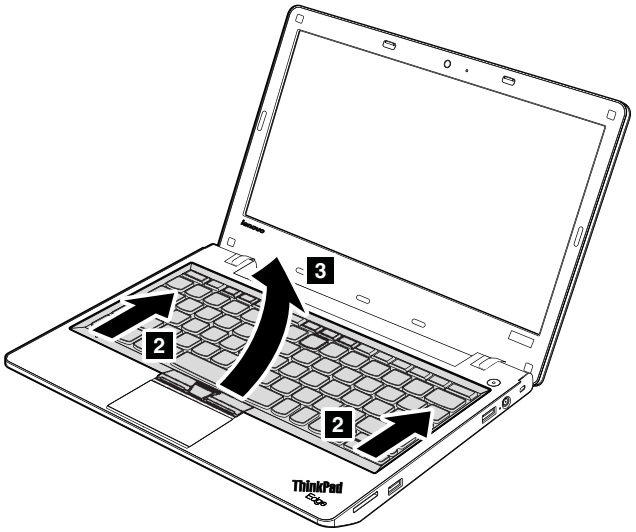

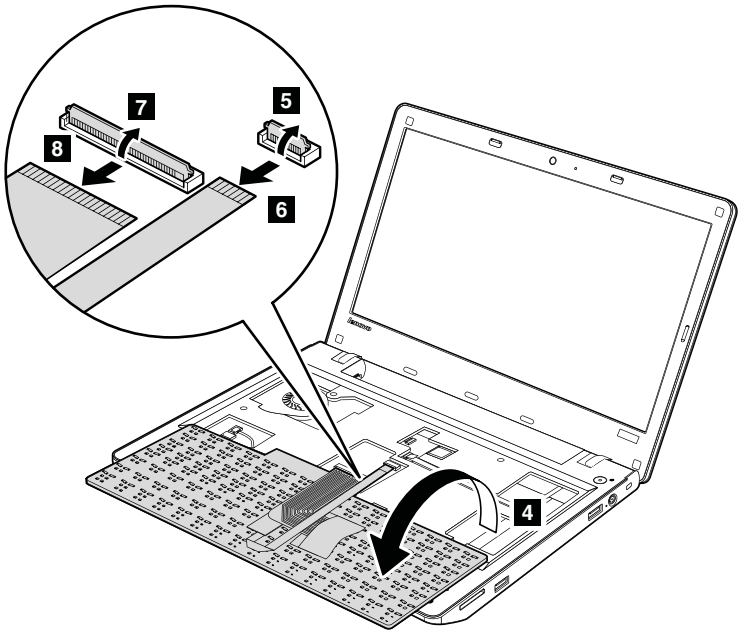

When installing: Make sure that the connectors are attached firmly.

When installing: Attach the keyboard so that the keyboard edge is under the frame as shown in the following figure.

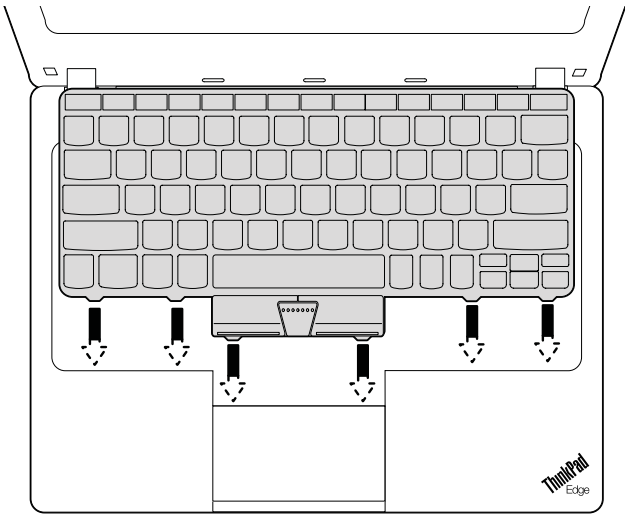

1080 Power sub card and microphone

For access, remove these FRUs in order:

- “1010 Battery pack” on page 52
- “1020 Bottom slot cover” on page 53
- “1040 Hard disk drive or solid state drive assembly” on page 54
- “1070 Keyboard” on page 59

Removal steps of power sub card

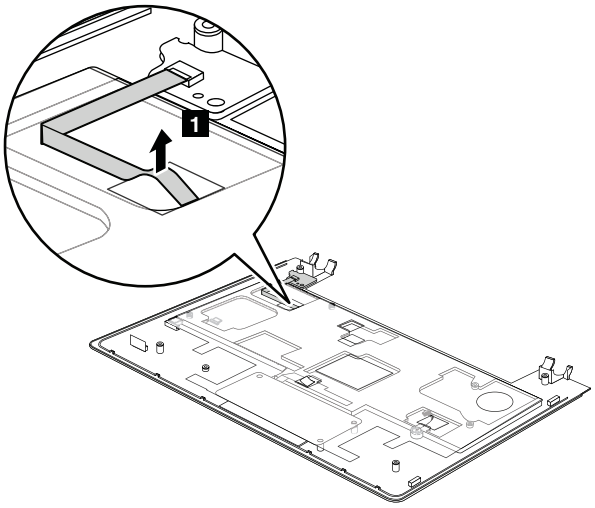

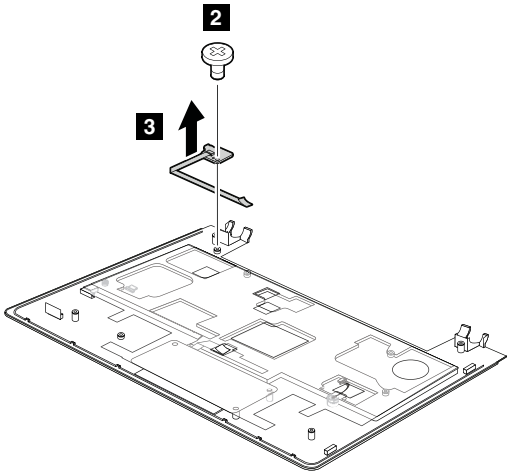

Step	Screw (quantity)	Color	Torque
2	M2 × 3 mm, wafer-head, nylon-coated (1)	Black	0.181 Nm (1.85 kgfcm)

Removal steps of microphone

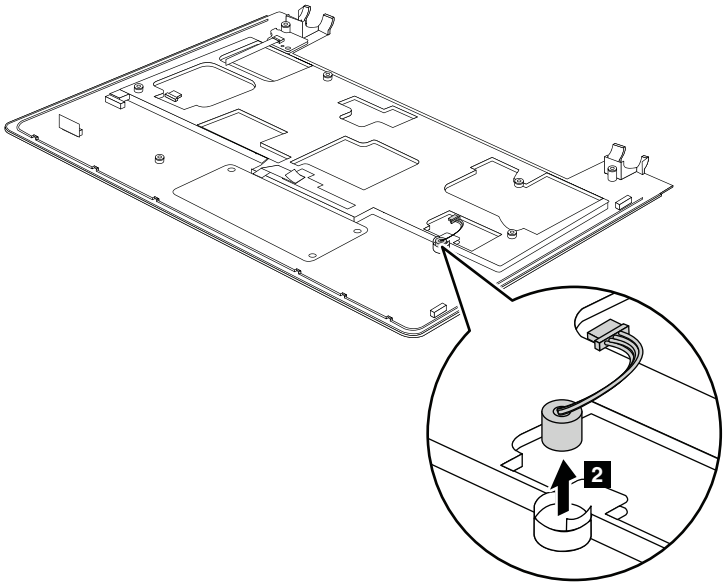

When installing: Make sure that the connectors are attached firmly.

1090 Top case assembly

For access, remove these FRUs in order:

- “1010 Battery pack” on page 52
- “1020 Bottom slot cover” on page 53
- “1070 Keyboard” on page 59

Removal steps of top case assembly

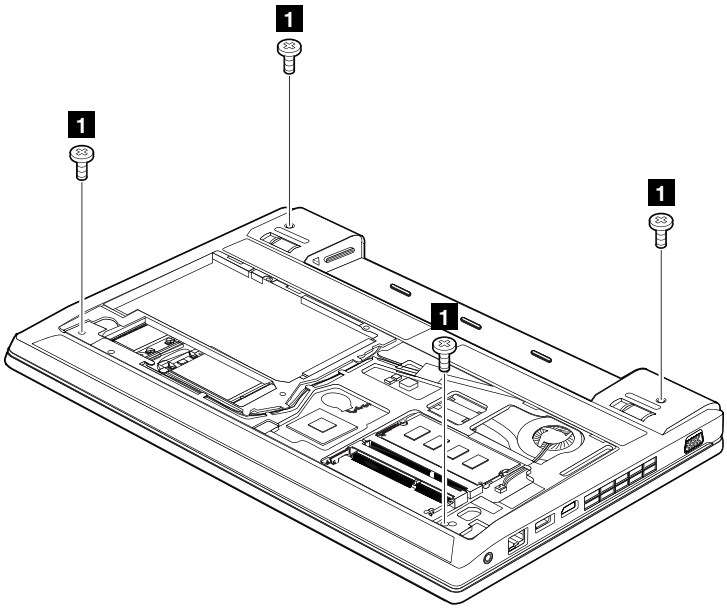

Step	Screw (quantity)	Color	Torque
1	• Front side: M2 × 5 mm, wafer-head, nylon-coated (2) • Rear side: M2.5 × 5 mm, wafer-head, nylon-coated (2)	Black	0.181 Nm (1.85 kgfcm)

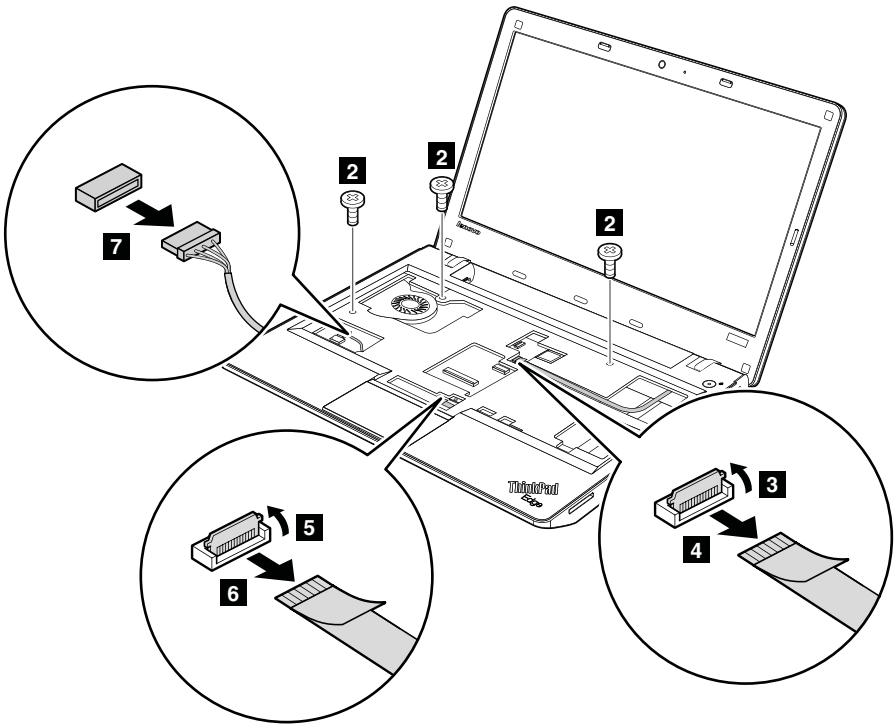

Step	Screw (quantity)	Color	Torque
2	M2 × 5 mm, wafer-head, nylon-coated (3)	Black	0.181 Nm (1.85 kgfcm)

In step 8, push the top case assembly out from the frame as shown in the following figure by using a plastic pry tool, and remove the top case assembly in the direction shown by the arrow

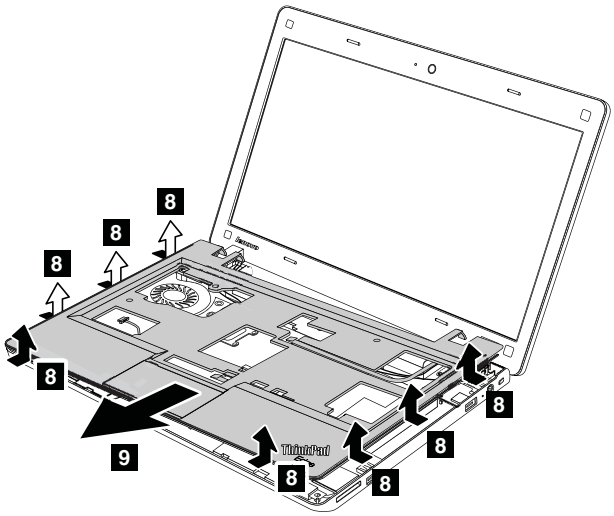

When installing: Make sure that all the projections of the top case assembly are attached firmly to the guide holes of the base cover.

1100 Bluetooth daughter card

For access, remove these FRUs in order:

- “1010 Battery pack” on page 52
- “1020 Bottom slot cover” on page 53
- “1070 Keyboard” on page 59
- “1090 Top case assembly” on page 62

Removal steps of Bluetooth daughter card

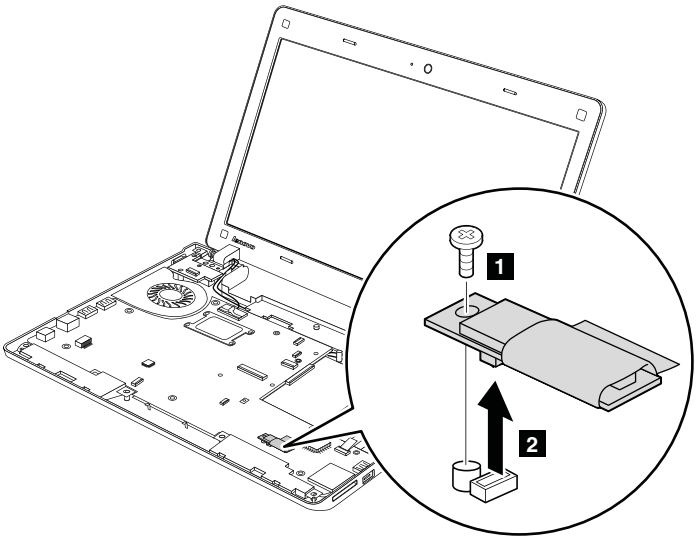

Step	Screw (quantity)	Color	Torque
1	M2 × 3 mm, wafer-head, nylon-coated (1)	Black	0.181 Nm (1.85 kgfcm)

When installing: Make sure that the connector on the bottom side of the card is attached firmly to the system board.

1110 Speaker assembly

For access, remove these FRUs in order:

- “1010 Battery pack” on page 52
- “1020 Bottom slot cover” on page 53
- “1070 Keyboard” on page 59
- “1090 Top case assembly” on page 62
- “1100 Bluetooth daughter card” on page 64

Removal steps of speaker assembly

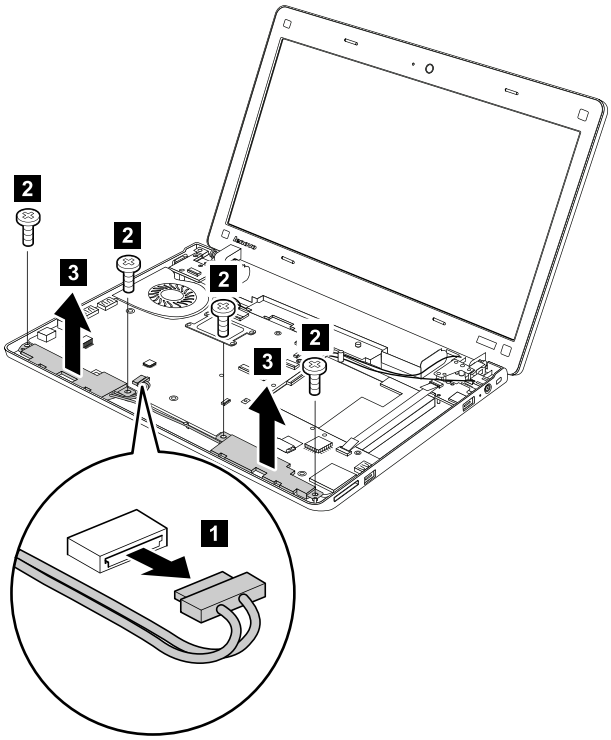

Step	Screw (quantity)	Color	Torque
2	M2 × 3 mm, wafer-head, nylon-coated (4)	Black	0.181 Nm (1.85 kgfcm)

When installing: Attach the speaker assembly and route the cable as shown in the following figure, and make sure that the speaker connector is attached firmly.

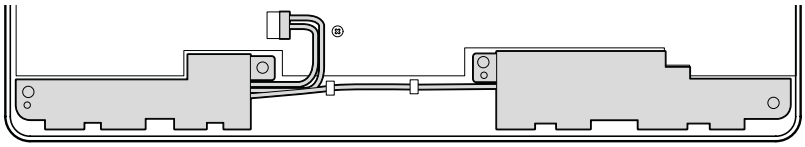

1120 I/O board

For access, remove these FRUs in order:

- “1010 Battery pack” on page 52
- “1020 Bottom slot cover” on page 53
- “1070 Keyboard” on page 59
- “1090 Top case assembly” on page 62

Removal steps of I/O board

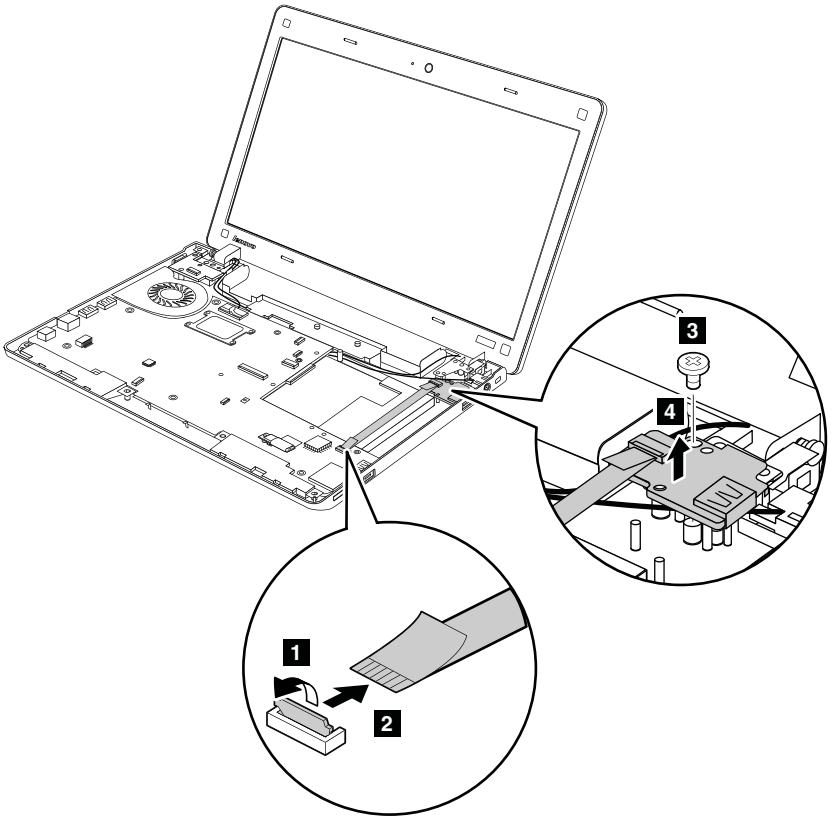

Step	Screw (quantity)	Color	Torque
3	M2 × 3 mm, wafer-head, nylon-coated (1)	Black	0.181 Nm (1.85 kgfcm)

When installing: Make sure that the connector is attached firmly.

1130 System board assembly, fan assembly, and backup battery

Important notices for handling the system board:

When handling the system board, bear the following in mind.

- The system board has an accelerometer, which can be broken if several thousands of G-forces are applied.

  Note: Dropping a system board from a height of as little as 6 inches so that it falls flat on a hard bench can subject the accelerometer to as much as 6,000 G's of shock.
- Be careful not to drop the system board on a bench top that has a hard surface, such as metal, wood, or composite.
- If a system board is dropped, test it using PC-Doctor for DOS if your system supports PC-Doctor for DOS, to make sure that the HDD Active Protection System™ still functions.

  Note: If the test shows that the HDD Active Protection System is not functioning, be sure to document the drop in any reject report, and replace the system board.

- Avoid rough handling of any kind.
- At every point in the process, be sure not to drop or stack the system board.
- If you put a system board down, be sure to put it only on a padded surface such as an ESD mat or a corrugated conductive surface.

If your system supports PC-Doctor for DOS, after replacing the system board, run PC-Doctor for DOS to make sure that the HDD Active Protection System still functions. The procedure is as follows:

1. Place the computer on a horizontal surface.
2. Run **Diagnostics → ThinkPad Devices → HDD Active Protection Test**.

   Attention: Do not apply physical shock to the computer while the test is running.

For access, remove these FRUs in order:
- “1010 Battery pack” on page 52
- “1020 Bottom slot cover” on page 53
- “1040 Hard disk drive or solid state drive assembly” on page 54
- “1070 Keyboard” on page 59
- “1090 Top case assembly” on page 62
- “1100 Bluetooth daughter card” on page 64

Removal steps of system board

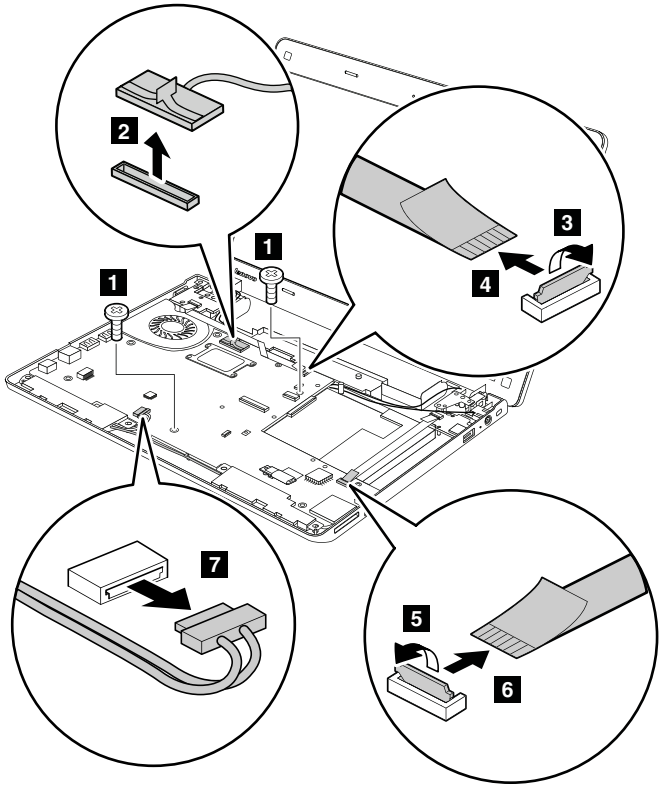

Step	Screw (quantity)	Color	Torque
1	M2 × 3 mm, wafer-head, nylon-coated (2)	Black	0.181 Nm (1.85 kgfcm)

When installing: Make sure that the connectors are attached firmly to the system board.

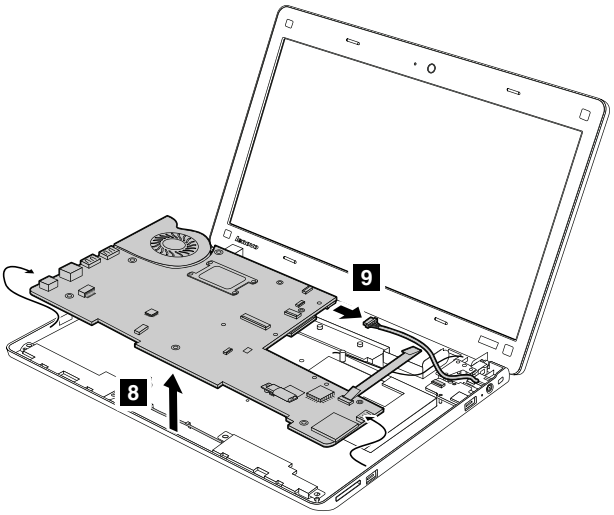

When installing: Make sure that the connector is attached firmly.

Removal steps of fan assembly and backup battery

Loosen the screws 10.

DANGER

Use only the battery specified in the parts list for your computer. Any other battery could ignite or explode.

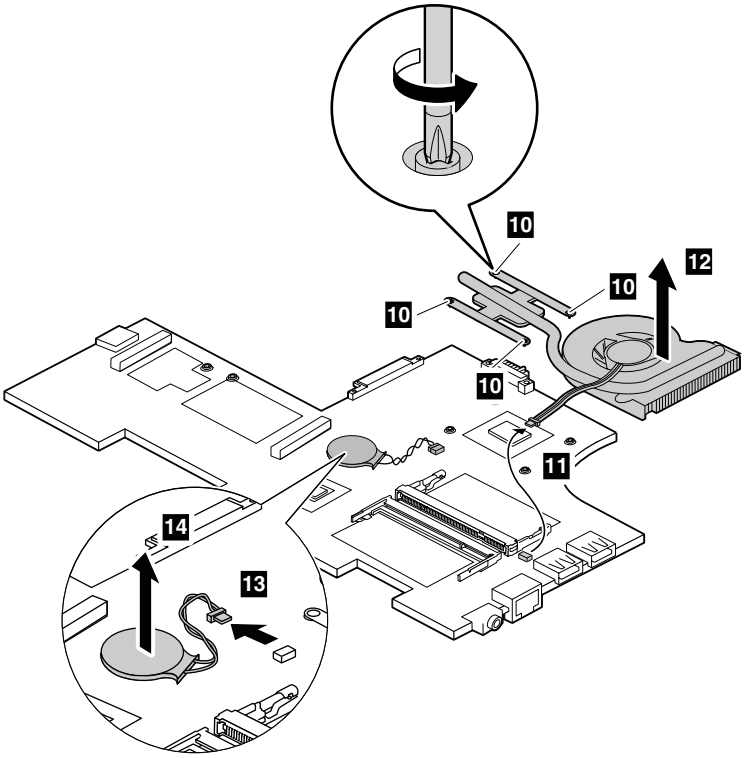

When installing: Make sure that the connector is attached firmly.

1140 CRT board assembly (with cable)

For access, remove these FRUs in order:
- “1010 Battery pack” on page 52
- “1020 Bottom slot cover” on page 53
- “1040 Hard disk drive or solid state drive assembly” on page 54
- “1070 Keyboard” on page 59
- “1090 Top case assembly” on page 62
- “1130 System board assembly, fan assembly, and backup battery” on page 66

Removal steps of CRT board assembly

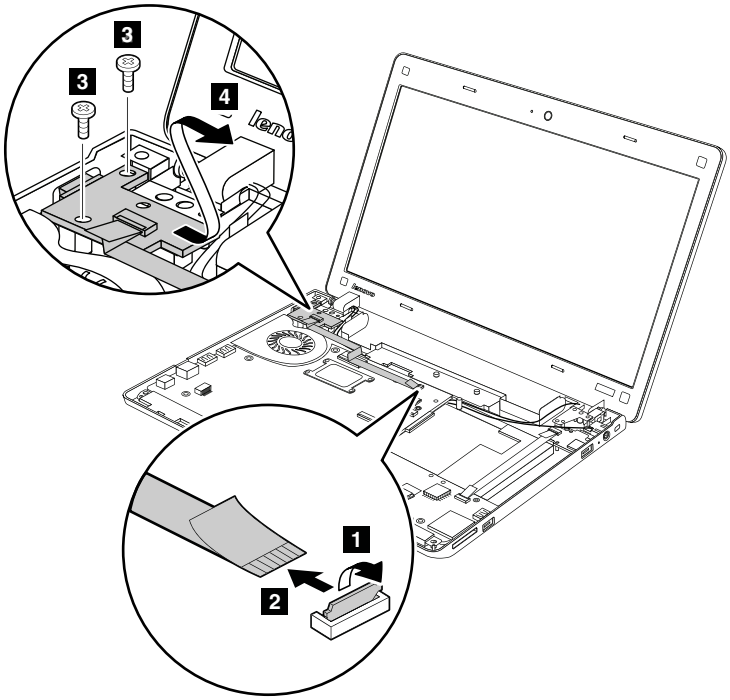

Step	Screw (quantity)	Color	Torque
3	M2 × 3 mm, wafer-head, nylon-coated (2)	Black	0.392 Nm (4 kgfcm)

When installing: Make sure that the connector is attached firmly to the system board.

1150 DC-in sub card and base cover assembly

For access, remove these FRUs in order:
- “1010 Battery pack” on page 52
- “1020 Bottom slot cover” on page 53
- “1040 Hard disk drive or solid state drive assembly” on page 54
- “1070 Keyboard” on page 59
- “1090 Top case assembly” on page 62
- “1130 System board assembly, fan assembly, and backup battery” on page 66

Removal steps of DC-in sub card

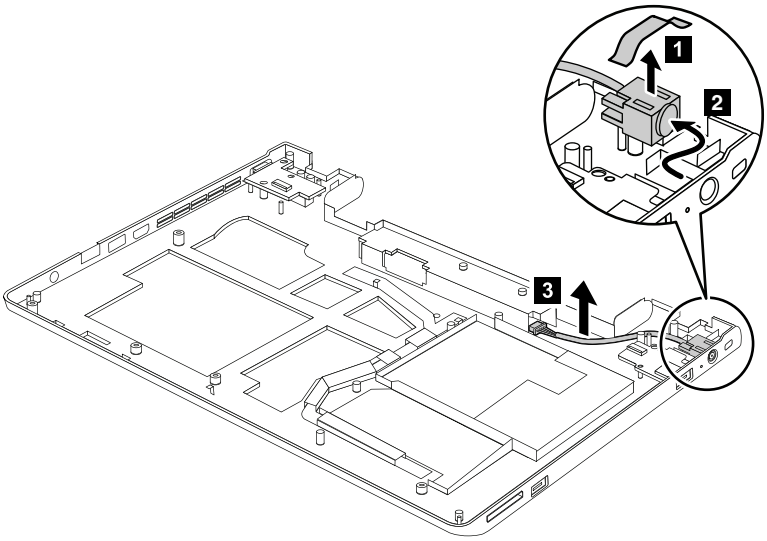

Applying labels to the base cover

The new base cover FRU is shipped with a kit containing labels of several kinds.

The following illustrations show the location of each label.

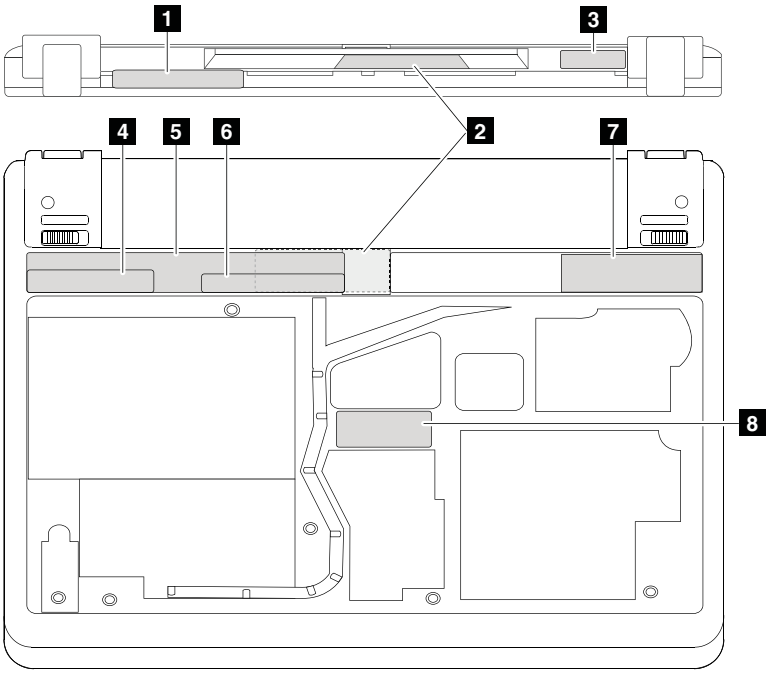

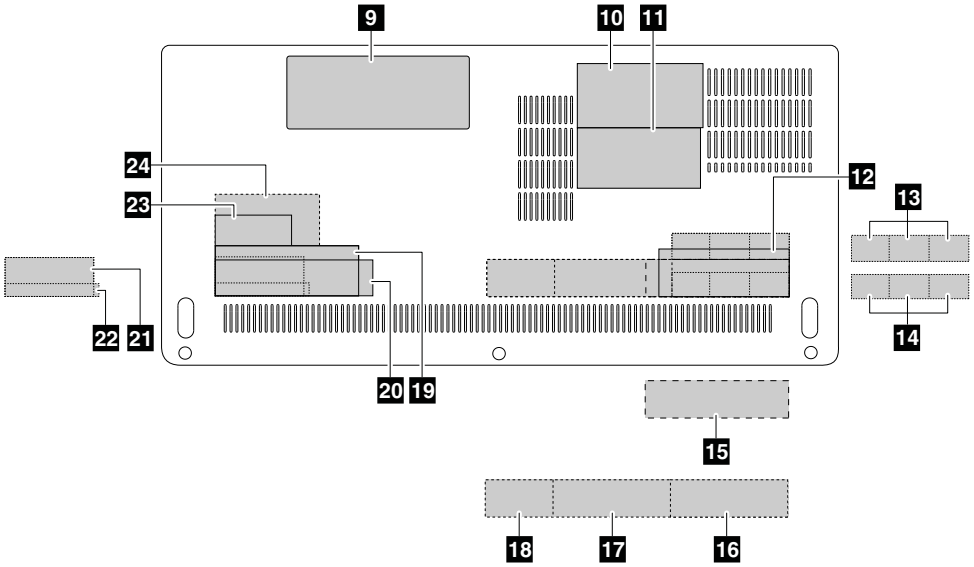

Note: If the Windows Certificate of Authentication label (COA) 2 or 9 is attached to a part that is replaced, return the old part with the label attached to the customer, or provide a letter to the customer stating what the label was originally on the system and what the label part number, serial number, and product key were.

When you replace the base cover, apply the following labels:

- 6 FCC label
- 7 Serial number label

The following labels need to be peeled off from the old base cover, and need to be put on the new base cover.

- 1 Onboard LAN MAC address label or Ethernet label
- 3 Certified label
- 4 GEO label
- 5 System label
- 8 Information label
- 10 Asset tag
- 11 SIM ICCID label
- 12 Israel label
- 13 Postel label by SKU Indonesia
- 14 SIRIM label for Modem/BT/WLAN/WWAN
- 15 Non Encryption label or Indonesia rating label
- 16 Brazil Anatel Bluetooth label
- 17 Brazil Anatel BG label
- 18 Brazil Anatel WWAN label
- 19 Leadcore China Mobile label
- 20 China Telecom label for IMEI
- 21 Qualcomm FOX Gobi 2000 label
- 22 IMEI label
- 23 China Telecom label for WWAN
- 24 China Mobile, China Unicom, or China WWAN label

For some models, you need to apply two FCC labels. Check the old base cover; if it has two FCC labels, apply both to the new base cover.

2010 LCD unit

For access, remove these FRUs in order:

- “1010 Battery pack” on page 52
- “1020 Bottom slot cover” on page 53
- “1040 Hard disk drive or solid state drive assembly” on page 54
- “1070 Keyboard” on page 59
- “1090 Top case assembly” on page 62
- “1130 System board assembly, fan assembly, and backup battery” on page 66

Removal steps of LCD unit

In step 1, release the antenna cables from the cable guides.

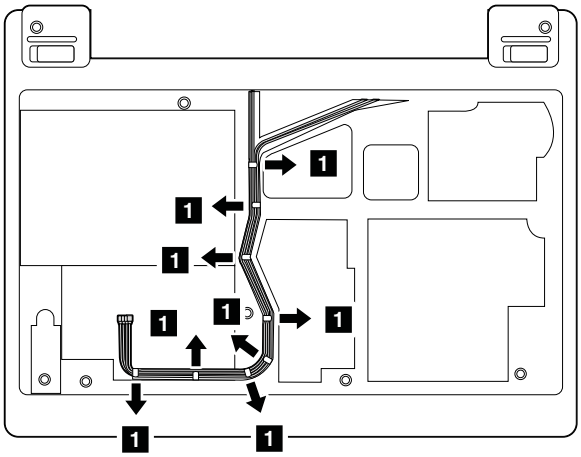

When installing:

- Make sure that the cables are attached to the cable guides firmly.
- When you route the cables, make sure that they are not subjected to any tension. Tension could cause the cables to be damaged by the cable guides, or a wire to be broken.

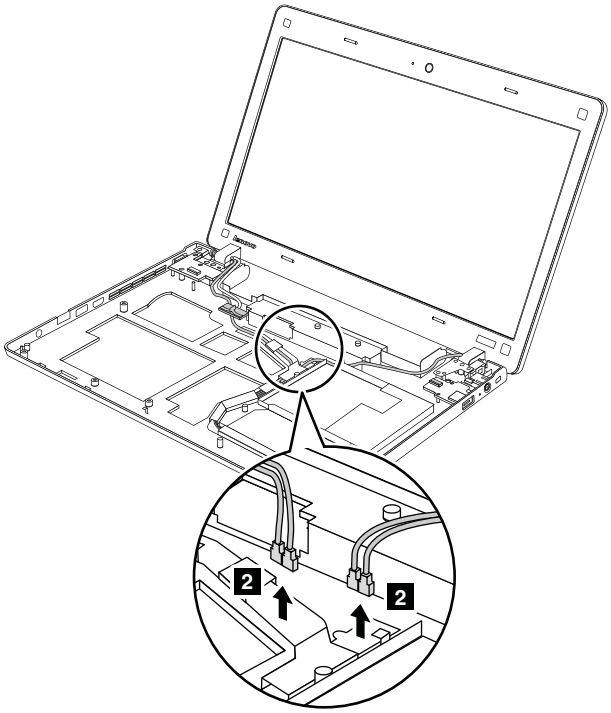

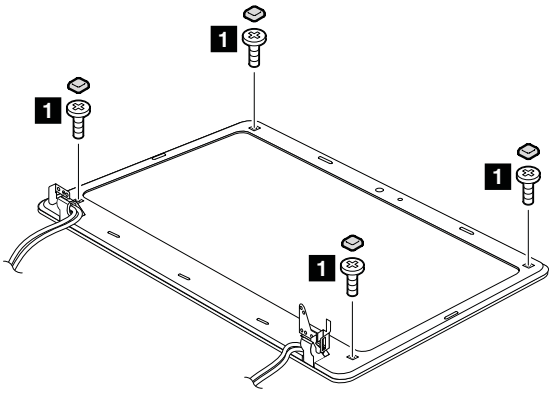

Step	Screw (quantity)	Color	Torque
3	M2.5 × 5 mm, wafer-head, nylon-coated (4)	Black	0.392 Nm (4 kgfcm)

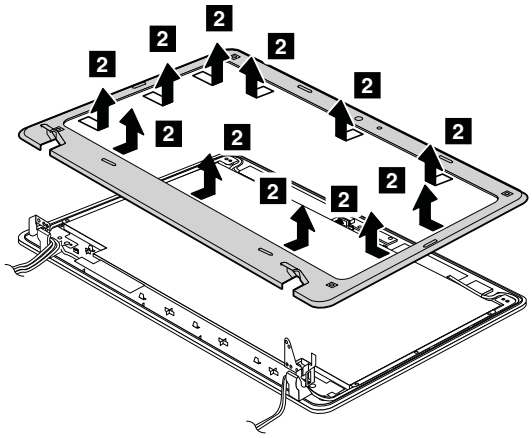

When installing: Make sure that the connector is attached firmly to the system board.

2020 LCD bezel assembly

For access, remove these FRUs in order:

- “1010 Battery pack” on page 52
- “1020 Bottom slot cover” on page 53
- “1040 Hard disk drive or solid state drive assembly” on page 54
- “1070 Keyboard” on page 59
- “1090 Top case assembly” on page 62
- “1130 System board assembly, fan assembly, and backup battery” on page 66
- “2010 LCD unit” on page 72

Removal steps of LCD bezel assembly

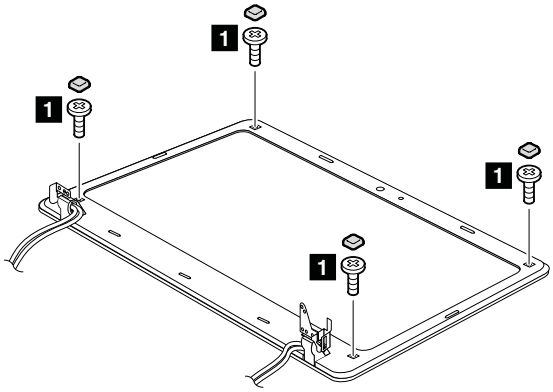

Step	Screw cap	Screw (quantity)	Color	Torque
1		M2 × 4 mm, wafer-head, nylon-coated (4)	Black	0.181 Nm (1.85 kgfcm)

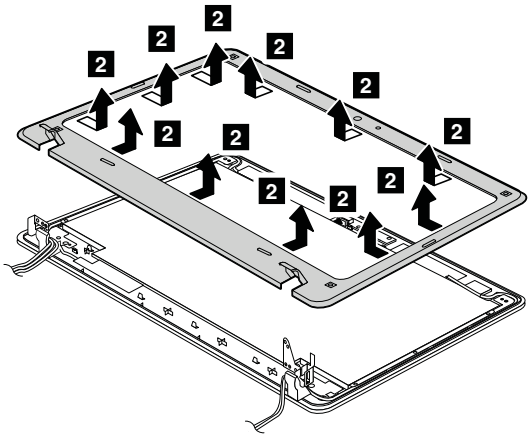

When installing: Make sure that all the latches are attached firmly. Then secure the bezel with the screws.

2030 Integrated camera

For access, remove these FRUs in order:

- “1010 Battery pack” on page 52
- “1020 Bottom slot cover” on page 53

- “1040 Hard disk drive or solid state drive assembly” on page 54
- “1070 Keyboard” on page 59
- “1090 Top case assembly” on page 62
- “1130 System board assembly, fan assembly, and backup battery” on page 66
- “2010 LCD unit” on page 72
- “2020 LCD bezel assembly” on page 74

Removal steps of integrated camera

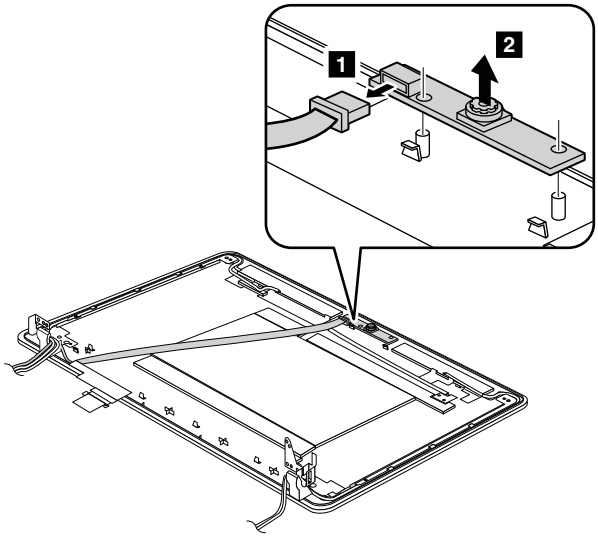

When installing: Make sure that the connector is attached firmly.

2040 LCD panel, LCD cable, and hinges

For access, remove these FRUs in order:
- “1010 Battery pack” on page 52
- “1020 Bottom slot cover” on page 53
- “1040 Hard disk drive or solid state drive assembly” on page 54
- “1070 Keyboard” on page 59
- “1090 Top case assembly” on page 62
- “1130 System board assembly, fan assembly, and backup battery” on page 66
- “2010 LCD unit” on page 72
- “2020 LCD bezel assembly” on page 74
- “2030 Integrated camera” on page 74

Removal steps of LCD panel and LCD cable

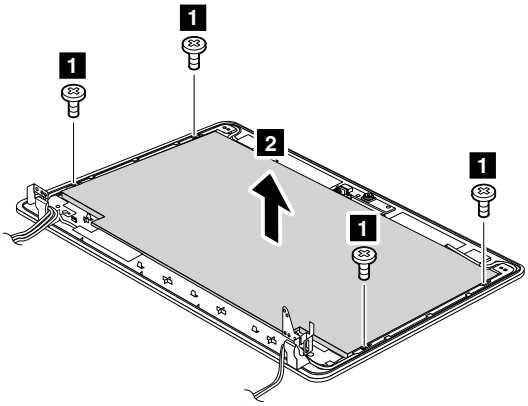

Step	Screw (quantity)	Color	Torque
1	M1.7 × 3 mm, wafer-head, nylon-coated (4)	Silver	0.181 Nm (1.85 kgfcm)

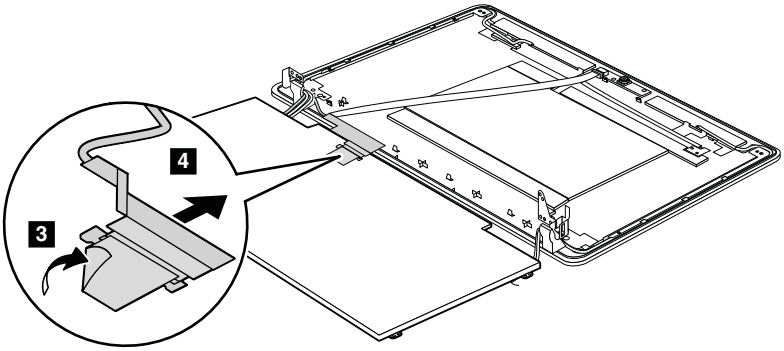

When installing: Make sure that the LCD connector is attached firmly.

Removal steps of hinges

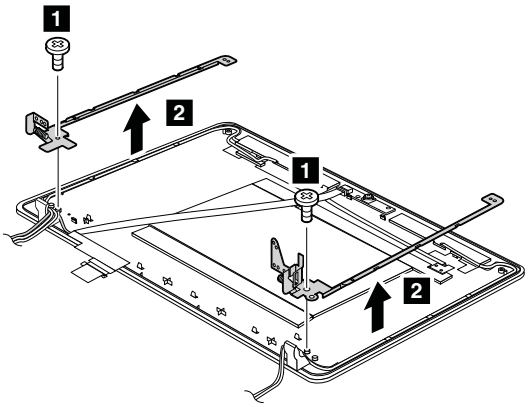

Step	Screw (quantity)	Color	Torque
1	M2 × 4 mm, wafer-head, nylon-coated (2)	Silver	0.181 Nm (1.85 kgfcm)

2050 Wireless LAN antenna assembly, wireless WAN antenna assembly, and LCD rear cover assembly

For access, remove these FRUs in order:

- “1010 Battery pack” on page 52
- “1020 Bottom slot cover” on page 53
- “1040 Hard disk drive or solid state drive assembly” on page 54
- “1070 Keyboard” on page 59
- “1090 Top case assembly” on page 62
- “1130 System board assembly, fan assembly, and backup battery” on page 66
- “2010 LCD unit” on page 72
- “2020 LCD bezel assembly” on page 74
- “2030 Integrated camera” on page 74
- “2040 LCD panel, LCD cable, and hinges” on page 75

Removal steps of Wireless LAN antenna assembly, wireless WAN antenna assembly, and LCD rear cover assembly

Release the antenna cables from the cable guides of the LCD rear cover assembly and from the hinges.

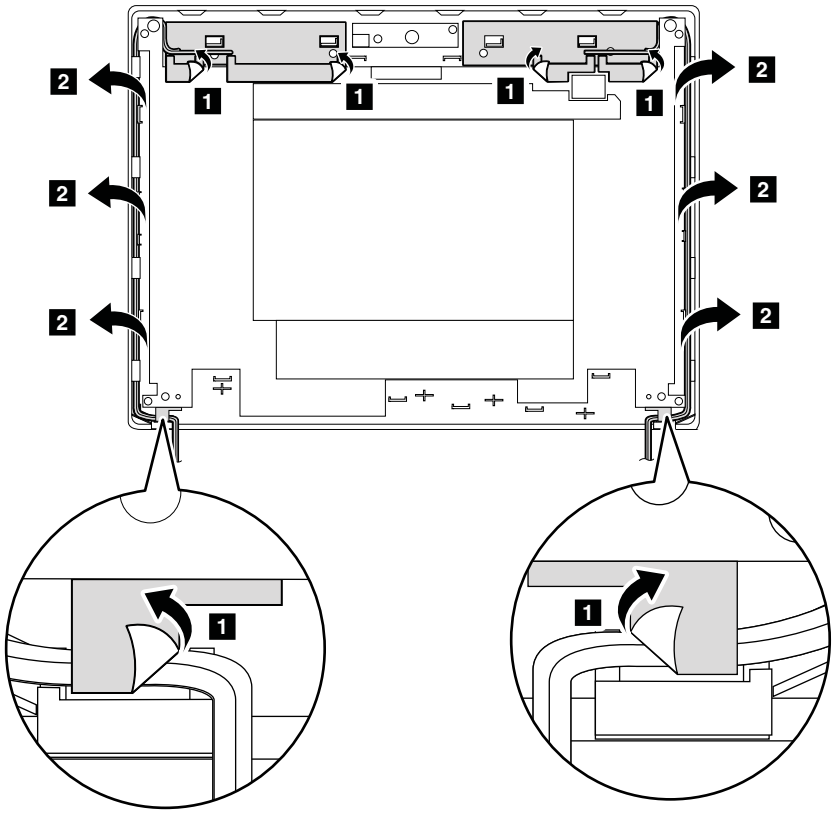

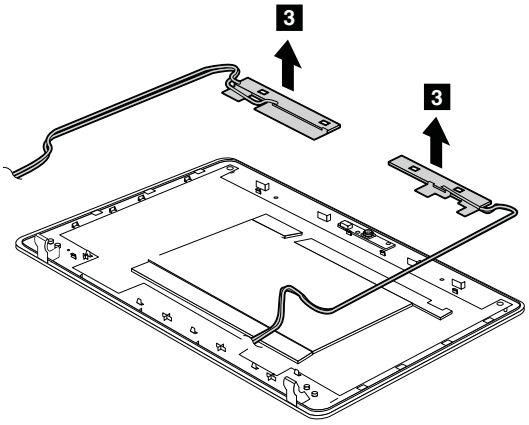

Cable routing: When you install the antenna assembly, route the cables as shown in the following figure. As you route the cables, make sure that they are not subjected to any tension. Tension could cause the cables to be damaged by the cable guides, or a wire to be broken.

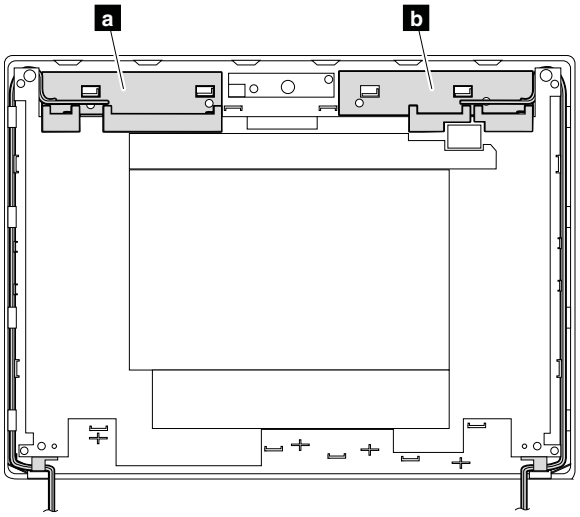

a: Wireless LAN AUX antenna (black) and wireless WAN AUX antenna (blue)
b: Wireless WAN MAIN antenna (orange) and wireless LAN MAIN antenna (gray)

Note: Some models might have a third white cable for wireless LAN.

Chapter 9. Locations

This chapter presents the locations of the ThinkPad Edge E120 and E125 hardware components.

Front view

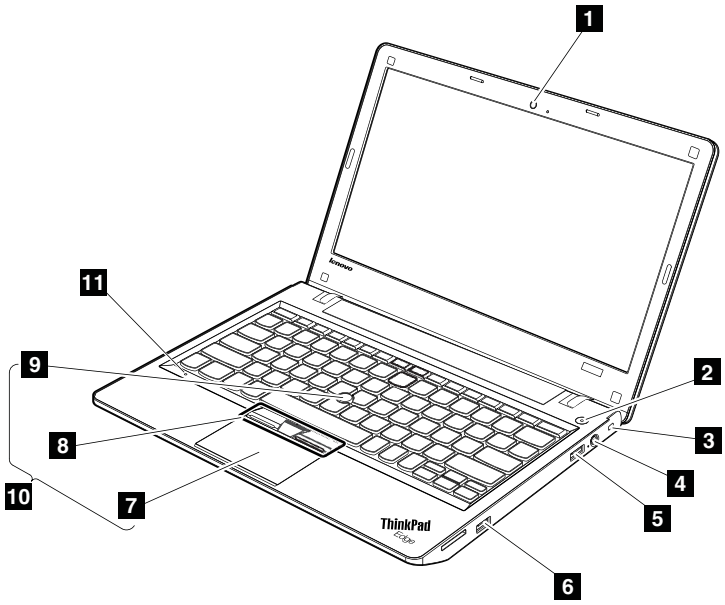

1 Integrated camera

2 Power switch Built-in microphones

3 Security keyhole

4 ac power connector

5 USB connector

6 Always on USB connector

7 Touch pad

8 TrackPoint buttons

9 TrackPoint pointing stick

10 UltraNav pointing device

11 Built-in digital microphone

For the description of the power status indicator, see Chapter 5 “Status indicators” on page 43.

© Copyright Lenovo 2012

Rear view

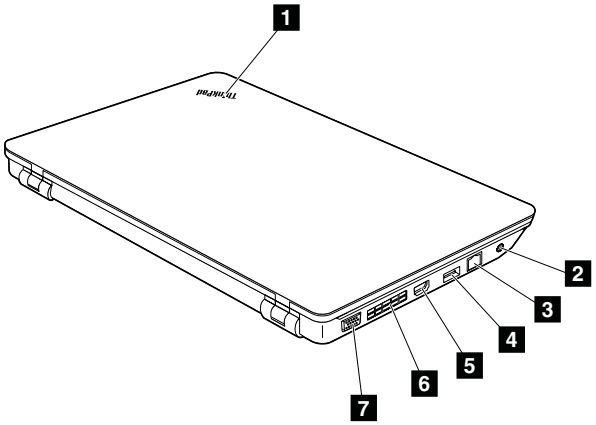

1 Sleep (standby) status indicator
2 Combo audio jack
3 Ethernet connector
4 USB connector
5 HDMI port
6 Fan louvers
7 External monitor connector

For the description of the power status indicator, see Chapter 5 “Status indicators” on page 43.

Bottom view

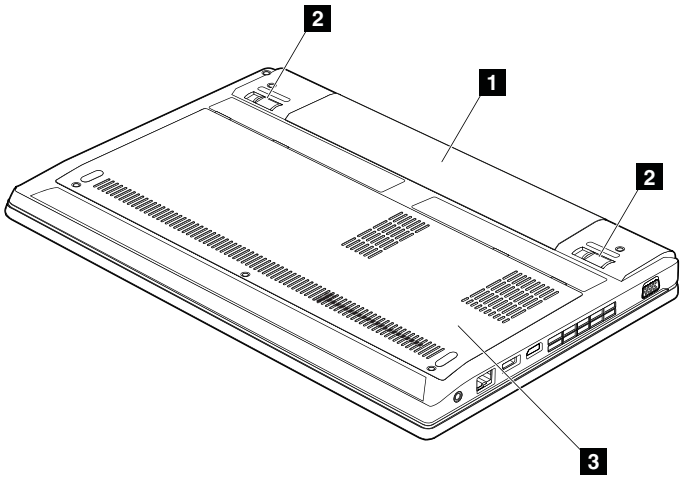

1 Battery pack
2 Battery pack latch
3 Bottom slot cover

For the description of the power status indicator, see Chapter 5 “Status indicators” on page 43.

Chapter 10. Parts list

This chapter contains following lists of the service parts.

- “Overall” on page 82
- “LCD FRUs” on page 85
- “Keyboard” on page 88
- “Miscellaneous parts” on page 89
- “ac power adapters” on page 89
- “Power cords” on page 90
- “Recovery discs” on page 91
- “Common service tools” on page 96

Notes:

- Each FRU is available for all types or models, unless specific types or models are specified.
- FRU with specific models listed and described as xxU (where U is an example of a country designator) should be used for all models ending in U.
- FRU with specific models listed and described as 3Dx (where 3D is an example of a unique configuration) should be used for all of these models, unless specific country or region designator is specified.
- A CRU (customer replaceable unit) is identified by a single asterisk (*) or two asterisks (**) in the CRU ID column. An N in the CRU ID column means that the part is not a CRU. A single asterisk (*) means that the part is a Self-service CRU; two asterisks (**) means that the part is an Optional-service CRU.

  External CRU statement to customers:
  Some problems with your product can be resolved with a replacement part you can install yourself, called a “Customer Replaceable Unit” or “CRU.” Some CRUs are designated as Self-service CRUs and others are designated as Optional-service CRUs. *Installation of Self-service CRUs is your responsibility; you may request that Lenovo installs an Optional-service CRU according to the warranty service for your product.* Where you are installing the CRU, Lenovo will ship the CRU to you. CRU information and replacement instructions are shipped with your product and are available from Lenovo at any time upon request. You may find a list of CRUs in the publications that ship with your product or at http://www.lenovo.com/CRUs. You may be required to return the defective part that is replaced by the CRU. When return is required: (1) return instructions, a prepaid shipping label, and a container will be included with the replacement CRU; and (2) you may be charged for the replacement CRU if Lenovo does not receive the defective part within thirty (30) days of your receipt of the replacement CRU. See your Lenovo Limited Warranty documentation for full details.

  ThinkPad computers contain the following types of CRUs:
  - **Self-service CRUs:** These CRUs unplug or are held by no more than two screws. Examples of these types of CRUs include the ac power adapter, power cord, battery, and hard disk drive. Other Self-service CRUs depending on product design may include the memory module, wireless card, keyboard, and palm rest with finger print reader and touchpad.
  - **Optional-service CRUs:** These CRUs are isolated parts within the computer that are concealed by an access panel that is typically secured by more than two screws. Once the access panel is removed, the specific CRU is visible.
- FRUs marked with **OP** are available as options.

© Copyright Lenovo 2012

Overall

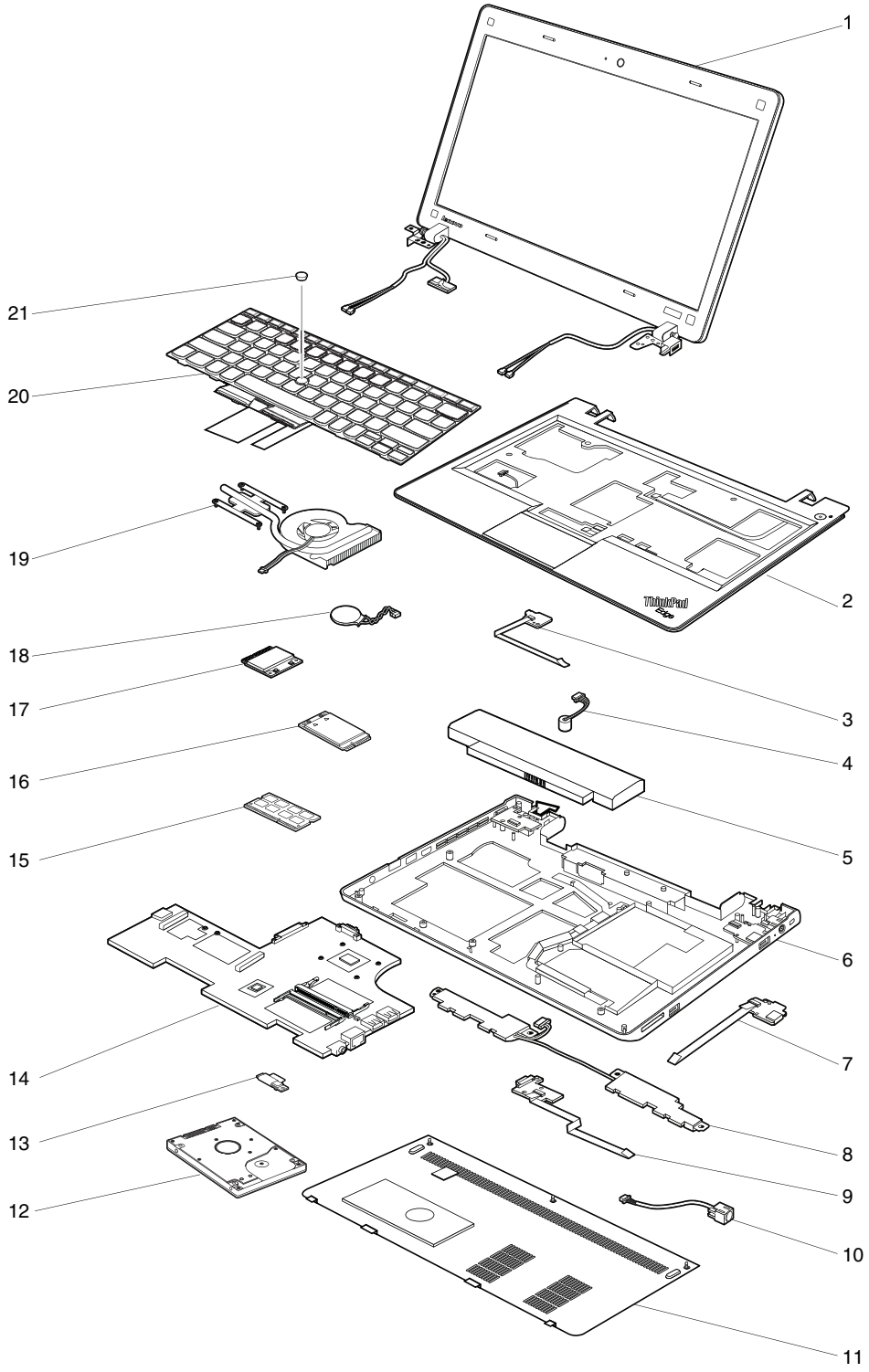

Table 9. Parts list - Overall

No.	FRU (Overall)	FRU no.	CRU ID
1	LCD unit (see “LCD FRUs” on page 85)		
2	Keyboard bezel assembly (without fingerprint reader)	04W1900	N
3	Power sub card	04W2232	N
4	Microphone	04W2213 60Y5748	N
5	Battery pack, 3 cell Li-ion (2.8 Ah) • 3035-CTO, 2Sx, 2Qx, 2Fx, 2Ax, 29x, 28x, 25x, 24x • 3043-CTO, 4Dx, 4Ex, 4Gx, 4Hx, 4Lx, 4Mx, 4Nx, 4Px, 74x, 75x	42T4943 42T4945	*
5	Battery pack, 6 cell Li-ion (2.8 Ah) • 3035-CTO, 23x, 26x, 27x, 2Bx, 2Cx, 2Dx, 2Ex, 2Gx, 2Hx, 2Jx, 2Kx, 2Lx, 2Mx, 2Nx, 2Px, 2Rx, 2Tx, 2Ux, 2Vx, 2Wx, 2Xx, 2Yx, 2Zx, 32x, 33x, 34x, 35x, 36x, 37x, 38x, 39x, 3Ax, 3Bx, 3Cx, 3Dx, 3Ex, 3Fx • 3043-CTO, 78x, 77x, 76x, 73x, 72x, 6Zx, 6Yx, 6Xx, 6Wx, 6Vx, 6Ux, 6Tx, 6Sx, 6Rx, 6Qx, 6Px, 6Nx, 6Mx, 6Lx, 6Kx, 6Jx, 6Hx, 6Gx, 6Fx, 6Ex, 6Dx, 6Cx, 6Bx, 6Ax, 69x, 68x, 67x, 66x, 65x, 64x, 63x, 62x, 5Zx, 5Xx, 5Wx, 5Vx, 5Ux, 5Tx, 5Sx, 5Rx, 5Qx, 5Px, 5Nx, 5Mx, 5Lx, 5Kx, 5Jx, 5Hx, 5Gx, 5Fx, 5Ex, 5Dx, 5Cx, 5Ax, 59x, 58x, 57x, 56x, 55x, 54x, 53x, 52x, 4Zx, 4Yx, 4Xx, 4Wx, 4Vx, 4Ux, 4Tx, 4Sx, 4Rx, 4Qx, 4Kx, 4Jx, 4Fx, 4Cx, 4Bx, 4Ax, 49x, 48x, 47x, 46x, 45x, 44x, 43x, 42x, 32x, 5Bx	42T4947 42T4949 42T4951	*
6	Base cover assembly	04W2230	N
6	Base cover assembly for Taiwan • 3035-CTO, 2Bx, 2Cx, 3Ex, 3Fx • 3043-CTO, 66x, 65x, 64x, 63x, 4Bx, 4Ax	04W2231	N
7	USB sub card	04W2233	N
8	Speaker assembly	04W2214	N
9	VGA connector	04W2234	N
10	DC-in cable	04W2235	N
11	Bottom cover with screw	04W2216	**
12	SATA hard disk drive, 250 GB, 5400 rpm • 3035-CTO, 2Xx, 2Qx, 36x, 28x • 3043-CTO, 4Lx, 4Mx, 76x	04W1793 04W1794 04W1306	*
12	SATA hard disk drive, 320 GB, 5400 rpm • 3035-CTO, 23x, 24x, 25x, 26x, 27x, 29x, 2Ax, 2Bx, 2Cx, 2Fx, 2Lx, 2Nx, 2Px, 2Rx, 2Sx, 2Ux, 2Yx, 2Zx, 32x, 33x, 34x, 35x, 38x, 39x, 3Ax, 3Bx, 3Cx • 3043-CTO, 43x, 44x, 45x, 46x, 47x, 48x, 4Dx, 4Ex, 4Fx, 4Gx, 4Hx, 4Nx, 4Px, 4Qx, 4Rx, 4Sx, 4Tx, 4Ux, 4Xx, 56x, 57x, 58x, 59x, 5Ax, 5Bx, 5Cx, 5Dx, 5Jx, 5Kx, 5Lx, 5Mx, 5Nx, 5Px, 5Qx, 5Rx, 5Ux, 5Vx, 5Wx, 5Xx, 5Zx, 62x, 74x, 75x	04W1795 04W1307	*
12	SATA hard disk drive, 320 GB, 7200 rpm • 3035-CTO, 2Mx, 2Tx, 2Vx, 2Wx, 37x, 3Dx, 3Ex, 3Fx • 3043-CTO, 49x, 4Ax, 4Bx, 4Cx, 4Jx, 4Kx, 4Yx, 4Zx, 52x, 53x, 54x, 55x, 5Ex, 5Fx, 5Gx, 5Hx, 5Sx, 5Tx, 63x, 64x, 65x, 66x, 67x, 68x, 69x, 6Ax, 6Bx, 6Cx, 6Wx, 6Xx, 79x	04W1796 04W1797 04W2142	*
12	SATA hard disk drive, 500 GB, 5400 rpm • 3035-CTO, 2Dx, 2Ex, 2Gx, 2Hx, 2Jx, 2Kx • 3043-CTO, 6Dx, 6Ex, 6Fx, 6Gx, 6Hx, 6Jx, 6Kx, 6Lx, 6Mx, 6Nx, 6Px, 6Qx, 6Rx, 6Sx, 6Tx, 6Ux, 6Vx, 6Yx, 6Zx, 72x, 73x, 77x, 78x	04W1308	*
12	SATA solid state drive, 128 GB • 3035-CTO • 3043-CTO	04W1798 04W1800 04W1799	*

Table 9. Parts list - Overall (continued)

No.	FRU (Overall)	FRU no.	CRU ID
13	Bluetooth daughter card (BDC-3.0) • 3035-CTO, 23x, 24x, 25x, 26x, 27x, 29x, 2Ax, 2Bx, 2Cx, 2Dx, 2Ex, 2Fx, 2Gx, 2Hx, 2Jx, 2Kx, 2Mx, 2Nx, 2Px, 2Rx, 2Sx, 2Tx, 2Ux, 2Vx, 2Wx, 2Xx, 2Yx, 2Zx, 33x, 34x, 35x, 36x, 37x, 38x, 3Bx, 3Cx, 3Dx, 3Ex, 3Fx • 3043-CTO, 46x, 49x, 4Ax, 4Bx, 4Cx, 4Dx, 4Ex, 4Fx, 4Gx, 4Hx, 4Jx, 4Kx, 4Nx, 4Px, 4Qx, 4Rx, 4Sx, 4Tx, 4Ux, 4Xx, 4Yx, 4Zx, 52x, 53x, 54x, 55x, 56x, 57x, 58x, 59x, 5Ax, 5Bx, 5Cx, 5Dx, 5Ex, 5Fx, 5Gx, 5Hx, 5Jx, 5Kx, 5Nx, 5Px, 5Qx, 5Rx, 5Sx, 5Tx, 5Ux, 5Vx, 5Wx, 5Xx, 5Zx, 62x, 63x, 64x, 65x, 66x, 67x, 68x, 69x, 6Ax, 6Bx, 6Cx, 6Dx, 6Ex, 6Fx, 6Gx, 6Hx, 6Jx, 6Kx, 6Lx, 6Mx, 6Nx, 6Px, 6Qx, 6Rx, 6Sx, 6Tx, 6Ux, 6Vx, 6Wx, 6Xx, 6Yx, 6Zx, 72x, 73x, 74x, 75x, 76x, 77x, 78x, 79x	60Y3271 60Y3275	N
14	System board assembly, Intel Core™ i3-2357M Processor, non-TPM Edge • 3043-CTO, 4Tx, 4Ux, 4Xx, 56x, 5Ax, 5Bx, 5Cx, 5Dx, 5Nx, 5Px, 5Qx, 5Rx, 5Ux, 5Vx, 5Wx, 5Xx, 5Zx, 62x, 64x, 65x, 66x, 67x, 69x, 6Bx, 6Cx, 6Lx, 6Mx, 6Wx, 6Xx, 74x, 75x, 79x	04W1830	N
14	System board assembly, Intel Core i3-2367M Processor, non-TPM Edge • 3043-CTO, 46x, 4Ax, 4Cx, 4Dx, 4Ex, 4Fx, 4Gx, 4Hx, 4Jx, 4Kx, 4Nx, 4Px, 4Qx, 4Rx, 4Sx, 53x, 54x, 5Fx, 5Hx, 5Sx, 5Tx, 6Dx, 6Ex, 6Fx, 6Gx, 6Kx, 6Nx, 6Qx, 6Rx, 6Sx, 6Tx, 6Ux, 6Vx, 6Yx, 6Zx, 72x, 73x, 77x,	04W3367	N
14	System board assembly, Intel Pentium® 957 Processor, non-TPM Edge • 3043-CTO, 4Lx, 4Mx, 52x, 57x, 58x, 59x, 5Gx, 5Jx, 5Kx, 5Lx, 5Mx, 68x, 6Ax	04W1831	N
14	System board assembly, Intel Pentium 967 Processor, non-TPM Edge • 3043-CTO, 45x, 47x, 48x, 4Bx, 4Yx, 4Zx, 55x, 5Ex, 63x, 6Hx, 6Jx, 6Px, 78x	04W3368	N
14	System board assembly, Intel Pentium 977 Processor, non-TPM Edge • 3043-CTO, 43x, 44x, 49x, 76x	04W3559	N
14	System board assembly, Intel Celeron® 847 Processor, non-TPM Edge • 3043-CTO	04W1832	N
14	System board assembly, Intel Celeron 857 Processor, non-TPM Edge • 3043-CTO	04W3369	N
14	System board assembly, Intel Celeron 867 Processor, non-TPM Edge • 3043-CTO	04W3560	N
14	System board assembly, AMD Fusion E-240 Processor, non-TPM Edge • 3035-CTO	04W1829	N
14	System board assembly, AMD Fusion E-300 Processor • 3035-CTO, 23x, 24x, 25x, 29x, 2Jx, 2Lx, 2Qx	04W3371	N
14	System board assembly, AMD Fusion E-350 Processor, non-TPM Edge • 3035-CTO, 2Sx, 33x, 34x, 35x, 36x, 3Bx, 3Cx, 3Dx, 3Fx	04W1828	N
14	System board assembly, AMD Fusion E-450 Processor • 3035-CTO, 26x, 27x, 2Ax, 2Bx, 2Cx, 2Dx, 2Ex, 2Fx, 2Gx, 2Hx, 2Mx, 2Nx, 2Px, 2Rx, 2Tx, 2Ux, 2Vx, 2Wx, 2Xx	04W3370	N
14	System board assembly, AMD Fusion C-50 Processor, non-TPM Edge • 3035-CTO, 2Kx, 2Yx, 2Zx, 32x, 37x, 38x, 39x, 3Ax, 28x, 3Ex	04W2143	N
15	2 GB DDR3-1333 SDRAM SO-DIMM (PC3-10600) card • 3035-CTO, 28x, 2Bx, 2Cx, 2Dx, 2Gx, 2Hx, 2Jx, 2Kx, 2Lx, 2Nx, 2Qx, 2Sx, 2Tx, 2Ux, 2Vx, 2Wx, 2Xx, 2Yx, 2Zx, 32x, 34x, 35x, 36x, 37x, 38x, 39x, 3Ax, 3Dx, 3Ex • 3043-CTO, 43x, 44x, 45x, 46x, 47x, 48x, 4Dx, 4Ex, 4Fx, 4Gx, 4Hx, 4Lx, 4Mx, 4Nx, 4Px, 4Qx, 4Rx, 4Sx, 4Xx, 4Zx, 52x, 53x, 54x, 55x, 56x, 57x, 58x, 59x, 5Ax, 5Bx, 5Cx, 5Dx, 5Ex, 5Jx, 5Kx, 5Lx, 5Mx, 5Nx, 5Px, 5Rx, 5Ux, 62x, 67x, 68x, 69x, 6Dx, 6Ex, 6Kx, 6Lx, 6Mx, 6Rx, 6Sx, 6Tx, 6Ux, 6Vx, 6Yx, 6Zx, 72x, 73x, 74x, 75x, 76x	55Y3716	*

Table 9. Parts list - Overall (continued)

No.	FRU (Overall)	FRU no.	CRU ID
15	4 GB DDR3-1333 SDRAM SO-DIMM (PC3-10600) card • 3035-CTO, 23x, 24x, 25x, 26x, 27x, 29x, 2Ax, 2Ex, 2Fx, 2Mx, 2Px, 2Rx, 33x, 3Bx, 3Cx, 3Fx • 3043-CTO, 49x, 4Ax, 4Bx, 4Cx, 4Jx, 4Kx, 4Tx, 4Ux, 4Yx, 5Fx, 5Gx, 5Hx, 5Qx, 5Sx, 5Tx, 5Vx, 5Wx, 5Xx, 5Zx, 63x, 64x, 65x, 66x, 6Ax, 6Bx, 6Cx, 6Fx, 6Gx, 6Hx, 6Jx, 6Nx, 6Px, 6Qx, 6Wx, 6Xx, 77x, 78x, 79x	55Y3717	*
16	Ericsson F5521gw Wireless WAN card • 3043-CTO, 49x, 4Cx, 4Fx, 4Gx, 4Jx, 4Tx, 5Qx, 5Vx, 5Wx, 64x, 65x, 66x, 6Fx, 6Rx, 6Yx, 6Zx	60Y3279	*
16	Ericsson F5521gw Wireless WAN card for Malaysia • 3043-CTO	60Y3267	*
16	Huawei EM660 Wireless WAN card • 3043-CTO	60Y3239	*
17	ThinkPad 11b/g/n Wireless LAN Mini-PCI Express Adapter II • 3035-CTO, 23x, 24x, 25x, 26x, 27x, 29x, 2Ax, 28x, 2Bx, 2Cx, 2Ex, 2Fx, 2Dx, 2Gx, 2Hx, 2Jx, 2Mx, 2Kx, 2Px, 2Rx, 2Lx, 2Nx, 2Qx, 2Sx, 2Tx, 2Ux, 2Vx, 2Wx, 2Xx, 2Yx, 33x, 2Zx, 32x, 34x, 35x, 36x, 37x, 38x, 39x, 3Ax, 3Bx, 3Cx, 3Dx, 3Ex, 3Fx • 3043-CTO, 43x, 44x, 45x, 46x, 47x, 48x, 4Ax, 4Bx, 4Dx, 4Ex, 4Lx, 4Mx, 5Ax, 5Bx, 5Cx, 5Dx, 5Jx, 5Kx, 5Lx, 5Mx, 67x, 68x, 69x, 6Dx, 6Ex, 6Nx, 6Px	60Y3247 60Y3249	*
17	ThinkPad 2x2 11a/b/g/n Wireless LAN PCI Express Half Mini Card Adapter • 3035-CTO • 3043-CTO	60Y3251	*
17	Intel Centrino® Wireless-N 1000 • 3043-CTO, 49x, 4Cx, 4Fx, 4Gx, 4Hx, 4Jx, 4Kx, 4Nx, 4Px, 4Qx, 4Rx, 4Sx, 4Tx, 4Ux, 4Xx, 4Yx, 4Zx, 52x, 53x, 54x, 55x, 56x, 57x, 58x, 59x, 5Ex, 5Fx, 5Gx, 5Hx, 5Nx, 5Px, 5Qx, 5Rx, 5Sx, 5Tx, 5Ux, 5Vx, 5Wx, 5Xx, 5Zx, 62x, 63x, 64x, 65x, 66x, 6Ax, 6Bx, 6Cx, 6Fx, 6Gx, 6Hx, 6Jx, 6Kx, 6Lx, 6Mx, 6Qx, 6Rx, 6Sx, 6Tx, 6Ux, 6Vx, 6Wx, 6Xx, 6Yx, 6Zx, 72x, 73x, 74x, 75x, 76x, 77x, 78x, 79x	60Y3241	*
17	Intel Centrino Advanced-N + WiMAX 6250, WW SKU • 3043-CTO	60Y3195	*
17	Intel Centrino Advanced-N + WiMAX 6250, Russia SKU • 3043-CTO	60Y3209	*
18	Backup battery	04W0331	**
19	Thermal module	04W2215	N
20	Keyboard (see “Keyboard” on page 88)		
21	TrackPoint caps	91P9642	*
—	ac power adapter (see “ac power adapters” on page 89)		

LCD FRUs

In ThinkPad Edge E120 and E125 models, the type of the LCD is 11.6-inch HD LED-backlight LCD.

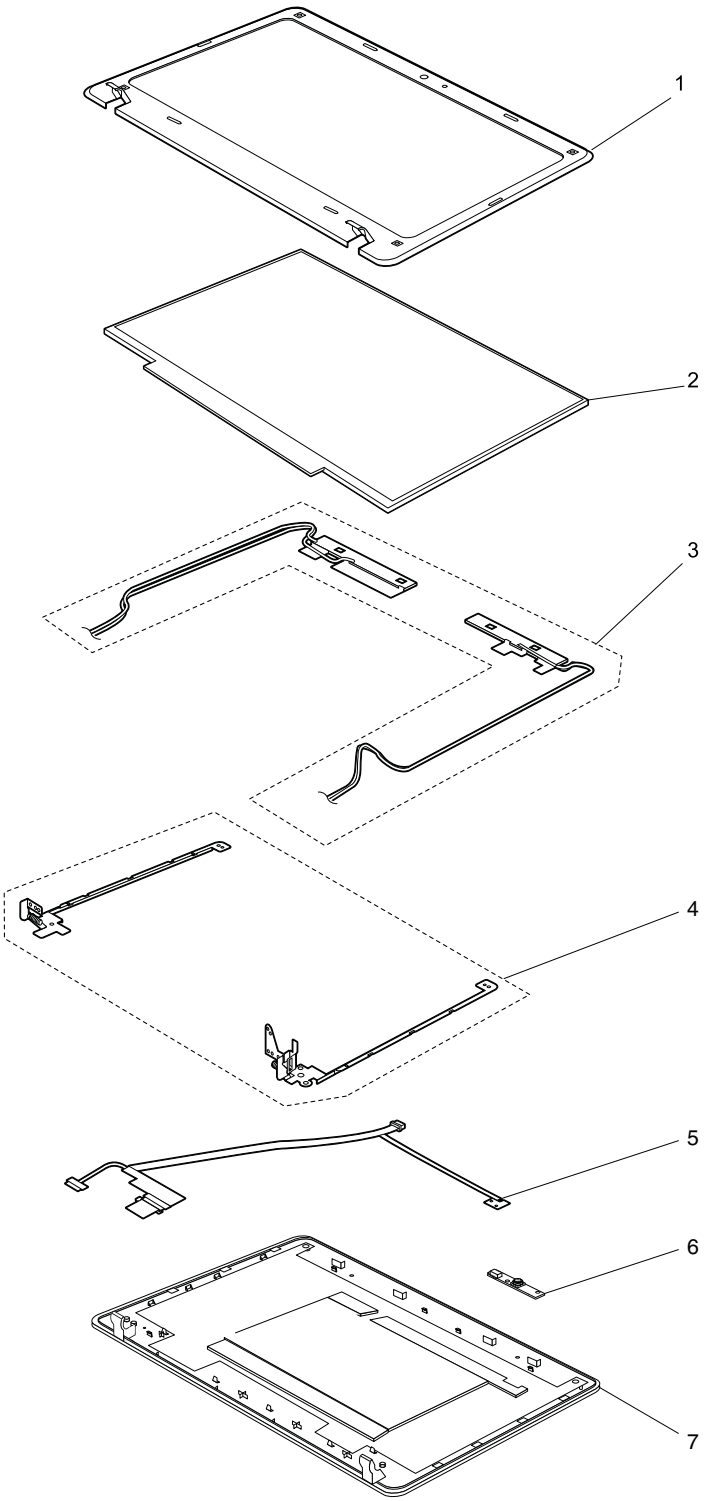
1
2
3
4
5
6
7

Table 10. Parts list-LCD

No.	FRU (LCD)	FRU no.	CRU ID
1	LCD front bezel	04W2228	N
2	LCD module, 11.6-inch HD glare • 3035-CTO, 23x, 26x, 28x, 2Bx, 2Cx, 2Dx, 2Ex, 2Fx, 2Lx, 2Px, 2Rx, 2Sx, 2Tx, 2Ux, 2Vx, 2Wx, 33x, 34x, 35x, 36x, 37x, 38x, 39x, 3Ax, 3Cx, 3Dx, 3Ex, 3Fx, • 3043-CTO, 43x, 44x, 47x, 48x, 4Ax, 4Bx, 4Dx, 4Ex, 4Fx, 4Gx, 4Hx, 4Kx, 4Lx, 4Mx, 4Nx, 4Px, 4Qx, 4Rx, 4Sx, 4Yx, 4Zx, 52x, 53x, 54x, 55x, 5Cx, 5Dx, 5Ex, 5Fx, 5Gx, 5Jx, 5Kx, 5Lx, 5Mx, 5Nx, 5Px, 5Qx, 5Rx, 5Tx, 5Ux, 5Vx, 5Wx, 5Xx, 5Zx, 62x, 65x, 66x, 67x, 68x, 69x, 6Cx, 6Dx, 6Ex, 6Fx, 6Kx, 6Lx, 6Mx, 6Nx, 6Px, 6Qx, 6Rx, 6Sx, 6Tx, 6Ux, 6Vx, 6Wx, 6Xx, 6Yx, 6Zx, 72x, 73x, 74x, 76x, 77x, 78x, 79x	04W1595 04W1599 04W1597	N
2	LCD module, 11.6-inch HD anti-glare • 3035-CTO, 24x, 25x, 27x, 29x, 2Ax, 2Gx, 2Hx, 2Jx, 2Mx, 2Kx, 2Nx, 2Qx, 2Xx, 2Yx, 2Zx, 32x, 3Bx • 3043-CTO, 45x, 46x, 49x, 4Cx, 4Jx, 4Tx, 4Ux, 4Xx, 56x, 57x, 58x, 59x, 5Ax, 5Bx, 5Hx, 5Sx, 63x, 64x, 6Ax, 6Bx, 6Gx, 6Hx, 6Jx, 75x	04W1594 04W1596	N
3	Wireless LAN antenna set • 3035-all • 3043-CTO, 43x, 44x, 45x, 46x, 47x, 48x, 4Ax, 4Bx, 4Dx, 4Ex, 4Hx, 4Kx, 4Lx, 4Mx, 4Nx, 4Px, 4Qx, 4Rx, 4Sx, 4Ux, 4Xx, 4Yx, 4Zx, 52x, 53x, 54x, 55x, 56x, 57x, 58x, 59x, 5Ax, 5Bx, 5Cx, 5Dx, 5Ex, 5Fx, 5Gx, 5Hx, 5Jx, 5Kx, 5Lx, 5Mx, 5Nx, 5Px, 5Rx, 5Sx, 5Tx, 5Ux, 5Xx, 5Zx, 62x, 63x, 67x, 68x, 69x, 6Ax, 6Bx, 6Cx, 6Dx, 6Ex, 6Gx, 6Hx, 6Jx, 6Kx, 6Lx, 6Mx, 6Nx, 6Px, 6Qx, 6Sx, 6Tx, 6Ux, 6Vx, 6Wx, 6Xx, 72x, 73x, 74x, 75x, 76x, 77x, 78x, 79x	04W2222	N
3	Wireless LAN and WAN antenna set • 3043-CTO, 49x, 4Cx, 4Fx, 4Gx, 4Jx, 4Tx, 5Qx, 5Vx, 5Wx, 64x, 65x, 66x, 6Fx, 6Rx, 6Yx, 6Zx	04W2223	
4	Hinges	04W2225 04W2226 04W2227	N
5	LCD cable (WLAN only) • 3035-all • 3043-CTO, 43x, 44x, 45x, 46x, 47x, 48x, 4Ax, 4Bx, 4Dx, 4Ex, 4Hx, 4Kx, 4Lx, 4Mx, 4Nx, 4Px, 4Qx, 4Rx, 4Sx, 4Ux, 4Xx, 4Yx, 4Zx, 52x, 53x, 54x, 55x, 56x, 57x, 58x, 59x, 5Ax, 5Bx, 5Cx, 5Dx, 5Ex, 5Fx, 5Gx, 5Hx, 5Jx, 5Kx, 5Lx, 5Mx, 5Nx, 5Px, 5Rx, 5Sx, 5Tx, 5Ux, 5Xx, 5Zx, 62x, 63x, 67x, 68x, 69x, 6Ax, 6Bx, 6Cx, 6Dx, 6Ex, 6Gx, 6Hx, 6Jx, 6Kx, 6Lx, 6Mx, 6Nx, 6Px, 6Qx, 6Sx, 6Tx, 6Ux, 6Vx, 6Wx, 6Xx, 72x, 73x, 74x, 75x, 76x, 77x, 78x, 79x	04W2224	N
5	LCD cable (WWAN supported) • 3035-CTO • 3043-CTO, 49x, 4Cx, 4Fx, 4Gx, 4Jx, 4Tx, 5Qx, 5Vx, 5Wx, 64x, 65x, 66x, 6Fx, 6Rx, 6Yx, 6Zx	04W2245	
6	Integrated camera	04W1897 04W1898 04W1899	N
7	LCD cover kit, red, without WAN • 3035-CTO, 23x, 2Bx, 2Px, 2Tx, 2Vx, 2Xx, 34x, 36x, 38x, 3Cx • 3043-CTO, 78x, 75x, 6Zx, 6Yx, 6Tx, 6Nx, 6Lx, 6Gx, 65x, 64x, 5Xx, 5Vx, 5Px, 5Mx, 5Kx, 5Fx, 5Ax, 57x, 4Xx, 4Tx, 4Rx, 4Px, 4Mx, 4Hx, 4Ex, 4Bx, 45x, 44x	04W2218	N
7	LCD cover kit, red, with WAN • 3035-CTO • 3043-CTO, 5Vx, 65x, 6Yx	04W2248	N

Table 10. Parts list-LCD (continued)

No.	FRU (LCD)	FRU no.	CRU ID
7	LCD cover kit, black, without WAN • 3035-CTO, 24x, 25x, 26x, 27x, 28x, 29x, 2Ax, 2Cx, 2Dx, 2Ex, 2Fx, 2Gx, 2Hx, 2Jx, 2Kx, 2Lx, 2Mx, 2Nx, 2Qx, 2Rx, 2Sx, 2Ux, 2Wx, 2Yx, 2Zx, 32x, 33x, 35x, 37x, 39x, 3Ax, 3Bx, 3Dx, 3Ex, 3Fx • 3043-CTO, 44x, 45x, 46x, 48x, 4Ax, 4Bx, 4Ex, 4Kx, 4Mx, 4Nx, 4Qx, 4Sx, 4Ux, 4Yx, 4Zx, 52x, 53x, 56x, 57x, 59x, 5Bx, 5Dx, 5Ex, 5Fx, 5Gx, 5Hx, 5Kx, 5Mx, 5Px, 5Sx, 5Ux, 5Xx, 63x, 67x, 68x, 69x, 6Ax, 6Bx, 6Cx, 6Ex, 6Gx, 6Kx, 6Lx, 6Nx, 6Px, 6Qx, 6Tx, 6Vx, 6Xx, 73x, 74x, 75x, 76x, 77x, 78x, 79x	04W2219	N
7	LCD cover kit, black, with WAN • 3043-CTO, 49x, 4Cx, 4Fx, 4Gx, 4Jx, 4Tx, 5Qx, 5Wx, 64x, 66x, 6Fx, 6Rx, 6Zx	04W2249	N

Keyboard

Table 11. Parts list-Keyboard

Language	FRU no.		CRU ID
Arabic	04W0949	04W0913	*
Belgian	04W0950	04W0914	
Brazilian Portuguese	04W0948	04W0912	
Bulgarian	04W0951	04W0915	
Canadian French (058)	04W0946	04W0910	
Canadian French (Acnor)	04W0945	04W0909	
Czech	04W0952	04W0916	
Danish	04W0953	04W0917	
Dutch	04W0963	04W0927	
Finnish, Swedish	04W0970	04W0934	
French	04W0955	04W0919	
German	04W0956	04W0920	
Greek (U.S. English and Greek layout)	04W0957	04W0921	
Hebrew	04W0958	04W0922	
Hungarian	04W0959	04W0923	
Icelandic	04W0960	04W0924	
India	04W1042	04W1043	
Italian	04W0961	04W0925	
Japanese	04W0975	04W0939	
Kazakhstan	04W0962	04W0926	
Korean	04W0976	04W0940	
Latin American Spanish	04W0947	04W0911	
Norwegian	04W0964	04W0928	
Polish	04W0965	04W0929	
Portuguese	04W0966	04W0930	

Table 11. Parts list-Keyboard (continued)

Language	FRU no.		CRU ID
Russian	04W0967	04W0931	
Slovak	04W0968	04W0932	
Slovenian	04W0969	04W0933	
Spanish	04W0954	04W0918	
Swiss	04W0971	04W0935	
Thai	04W0978	04W0942	
Traditional Chinese	04W0977	04W0941	
Turkish	04W0972	04W0936	
Turkish-F	04W0979	04W0943	
U.K. English	04W0973	04W0937	
U.S. English	04W0944	04W0908	
U.S. English (International, with a Euro symbol)	04W0974	04W0938	

Miscellaneous parts

Table 12. Parts list-Miscellaneous parts

FRU	FRU no.	CRU ID
Screw kit (including nylon-coated screws): • M2 × 3 mm (black), wafer head (20) • M2 × 4 mm (silver), wafer head (10) • M2.5 × 5 mm (black), wafer head (10) • M2 × 8 mm (black), wafer head (5) • M3 × 3.5 mm (black), wafer head (5) • M2 × 5 mm (black), wafer head (15)	04W2217	N

ac power adapters

Table 13. Parts list-2-pin ac power adapters

FRU	FRU no.	CRU ID
2-pin (65 W, 20 V) adapter (Models CTO, xxU, xxF, xxL, xxP, xxS, xxY, xxE, xxJ)	45N0122	*
2-pin (65 W, 20 V) adapter (Models CTO,xxU, xxF, xxL, xxP, xxS, xxY, xxE, xxJ)	42T4423	
2-pin (65 W, 20 V) adapter (Models CTO, xxU, xxF, xxL, xxP, xxS, xxY, xxE, xxJ)	42T4419	

Table 14. Parts list-3-pin ac power adapters

FRU	FRU no.	CRU ID
3-pin (65 W, 20 V) adapter (Models CTO, xxG, xxM, xxQ, xxA, xxT, xxK, xxC, xxB, xxH, xxV)	45N0120	*
3-pin (65 W, 20 V) adapter (Models CTO, xxG, xxM, xxQ, xxA, xxT, xxK, xxC, xxB, xxH, xxV)	42T4421	
3-pin (65 W, 20 V) adapter (Models CTO, xxG, xxM, xxQ, xxA, xxT, xxK, xxC, xxB, xxH, xxV)	42T4417	

Power cords

A ThinkPad power cord for a specific country or region is usually available only in that country or region:

Table 15. Parts list-2-pin power cords

Country or region	FRU no.		CRU ID
Argentina • Models: CTO, xxY	42T5020	42T5105	*
Brazil • Models: CTO, xxP	42T5180	42T5183	
Canada, U.S. • Models: CTO, xxF, xxL, xxS, xxU	42T5008	42T5093	
Japan • Models: CTO, xxE, xxJ	42T5014	42T5099	

Table 16. Parts list-3-pin power cords

Country or region	FRU no.		CRU ID
Australia, New Zealand • Models: CTO, xxM	42T5050	42T5135	*
Bangladesh, Sri Lanka, South Africa • Models: CTO, xxG	42T5056	42T5141	
Canada, U.S. • Models: CTO, xxG, xxT	42T5004	42T5089	
China (P.R.C.) (other than Hong Kong S.A.R.) • Models: CTO, xxC	42T5065	42T5150	
Denmark • Models: CTO, xxG	42T5041	42T5126	
European countries • Models: CTO, xxG	42T5029	42T5114	
India • Models: CTO, xxQ	42T5083	42T5168	
Israel • Models: CTO, xxG	42T5062	42T5147	
Italy • Models: CTO, xxG	42T5047	42T5132	
Korea • Models: CTO, xxK	42T5077	42T5162	
Switzerland • Models: CTO, xxG	42T5044	42T5129	
Taiwan • Models: CTO, xxV	42T5071	42T5156	
U.K., China (Hong Kong S.A.R.) • Models: CTO, xxB, xxG, xxH	42T5035	42T5120	

Recovery discs

Windows XP Professional (32-bit) DVDs

Note: The Windows XP Professional recovery DVDs are available only for models with a valid Microsoft Windows XP Professional certificate of authenticity (COA) affixed to the system. Due to a Microsoft licensing limitation, if a model came with Windows XP Professional preinstalled from the factory, but has either a Windows 7 or Windows Vista COA affixed to the system, that model is eligible only for recovery DVDs that match the operating system specified on the COA.

Windows XP Professional is preinstalled as the operating system in the following models:
- 3035-CTO
- 3043-CTO

Table 17. Parts list-Windows XP Professional recovery DVDs

Language	P/N	CRU ID
French	04T1928	*
German	04T1929	
Italian	04T1930	
Japanese	04T1931	
Spanish	04T1932	
US English	04T1933	

Windows Vista Business (32-bit) DVDs

Note: The Windows Vista recovery DVDs are available only for models with a valid Microsoft Windows Vista certificate of authenticity (COA) affixed to the system. Due to a Microsoft licensing limitation, if a model came with Windows Vista Business or Windows Vista Ultimate preinstalled from the factory, but has a Windows 7 COA affixed to the system, that model is eligible only for recovery DVDs that match the operating system specified on the COA.

Windows Vista Business is preinstalled as the operating system in the following models:
- 3035-CTO
- 3043-CTO

Table 18. Parts list-Windows Vista Business (32-bit) recovery DVDs

Language	P/N	CRU ID
US English	04T4054	N

Windows 7 Home Basic (32-bit) with Service Pack 1 DVDs

Windows 7 Home Basic (32-bit) is preinstalled as the operating system in the following models:
- 3035-CTO, 2Ax, 2Qx, 2Rx, 2Tx, 2Ux, 2Xx, 32x, 33x, 34x, 35x, 36x, 37x, 38x, 39x
- 3043-CTO, 43x, 44x, 45x, 46x, 47x, 48x, 4Dx, 4Ex, 4Lx, 4Mx, 4Xx, 56x, 57x, 58x, 5Ax, 5Bx, 5Cx, 5Dx, 5Jx, 5Kx, 5Lx, 5Mx, 6Dx, 6Ex, 6Kx, 6Lx, 6Mx

Table 19. Parts list-Windows 7 Home Basic (32-bit) with Service Pack 1 recovery DVDs

Language	P/N	CRU ID
Arabic	04T3151	*
Brazilian Portuguese	04T3152	
French	04T3155	
Indian English	04T3154	
Portuguese	04T3156	
Russian	04T3157	
Serbian-Latin	04T3159	
Simplified Chinese	04T3153	
Spanish	04T3158	
Turkish	04T3160	
US English	04T3161	

Windows 7 Home Basic (64-bit) with Service Pack 1 DVDs

Windows 7 Home Basic (32-bit) is preinstalled as the operating system in the following models:
- 3045-CTO
- 3048-CTO
- 3049-CTO
- 3051-CTO
- 3053-CTO
- 3055-CTO

Table 20. Parts list-Windows 7 Home Basic (64-bit) with Service Pack 1 recovery DVDs

Language	P/N	CRU ID
Arabic	04T3165	*
Brazilian Portuguese	04T3166	
French	04T3169	
Indian English	04T3168	
Portuguese	04T3170	
Russian	04T3172	
Serbian-Latin	04T3174	
Simplified Chinese	04T3167	
Spanish	04T3173	
Turkish	04T3175	
US English	04T3176	

Windows 7 Home Premium (32-bit) with Service Pack 1 DVDs

Windows 7 Home Premium (32-bit) is preinstalled as the operating system in the following models:
- 3035-CTO
- 3043-CTO

Table 21. Parts list-Windows 7 Home Premium (32-bit) with Service Pack 1 recovery DVDs

Language	P/N	CRU ID
Indian English	04T3163	N
Simplified Chinese	04T3163	
US English	04T3163	

Windows 7 Home Premium (64-bit) with Service Pack 1 DVDs

Windows 7 Home Premium (64-bit) is preinstalled as the operating system in the following models:

- 3035-CTO, 23x, 25x, 28x, 2Dx, 2Mx, 2Px, 3Cx, 3Fx
- 3043-CTO, 4Jx, 4Px, 4Qx, 53x, 54x, 55x, 5Ex, 5Fx, 5Gx, 5Nx, 5Px, 5Sx, 5Tx, 5Vx, 5Wx, 62x, 69x, 6Cx, 6Gx, 6Hx, 6Ux, 6Vx, 6Wx, 6Xx, 74x, 77x, 78x

Table 22. Parts list-Windows 7 Home Premium (64-bit) with Service Pack 1 recovery DVDs

Language	P/N	CRU ID
Arabic	04T3177	*
Brazilian Portuguese	04T3178	
C&L Croatian (English/Slovenian/Croatian)	04T3202	
C&L EMEA (Dutch/French/German/Italian/English)	04T3200	
C&L HongKong (Simplified Chinese/English)	04T3201	
C&L Nordics (Danish/Finnish/Swedish/Norwegian/English)	04T3199	
Cezch	04T3181	
French	04T3182	
German	04T3184	
Greek	04T3183	
Hebrew	04T3185	
Hungarian	04T3186	
Japanese	04T3187	
Korean	04T3188	
Polish	04T3189	
Portuguese	04T3190	
Romanian	04T3191	
Russian	04T3192	
Serbian-Latin	04T3195	
Simplified Chinese	04T3179	
Slovakian	04T3193	
Spanish	04T3194	
Traditional Chinese	04T3180	
Turkish	04T3196	
US English	04T3198	
US English disable	04T3197	

Windows 7 Professional (32-bit) with Service Pack 1 DVDs

Windows 7 Professional (32-bit) is preinstalled as the operating system in the following models:
- 3035-CTO
- 3043-CTO, 75x

Table 23. Parts list-Windows 7 Professional (32-bit) with Service Pack 1 recovery DVDs

Language	P/N	CRU ID
French	04T3115	*
German	04T3116	
Indian English	04T3114	
Japanese	04T3117	
Simplified Chinese	04T3113	
US English	04T3119	
Spanish	04T3118	
C&L Nordics (Danish/Finnish/Swedish/Norwegian/English)	04T3120	
C&L EMEA (Dutch/French/German/Italian/English)	04T3121	
C&L HongKong (Simplified Chinese/English)	04T3294	

Windows 7 Professional (64-bit) with Service Pack 1 DVDs

Windows 7 Professional (64-bit) is preinstalled as the operating system in the following models:
- 3035-CTO, 29x, 2Ex, 2Lx
- 3043-CTO, 49x, 4Cx, 4Fx, 4Hx, 4Nx, 4Tx, 4Ux, 5Hx, 5Xx, 5Zx, 64x, 65x, 66x, 6Bx, 6Fx, 6Qx, 6Rx, 6Sx, 6Tx, 79x

Table 24. Parts list-Windows 7 Professional (64-bit) with Service Pack 1 recovery DVDs

Language	P/N	CRU ID
Arabic	04T3122	*
Brazilian Portuguese	04T3123	
C&L Croatian (English/Slovenian/Croatian)	04T3148	
C&L EMEA (Dutch/French/German/Italian/English)	04T3146	
C&L HongKong (Simplified Chinese/English)	04T3147	
C&L Nordics (Danish/Finnish/Swedish/Norwegian/English)	04T3145	
Czech	04T3126	
French	04T3128	
German	04T3130	
Greek	04T3129	
Hebrew	04T3131	
Hungarian	04T3132	
Indian English	04T3127	
Japanese	04T3133	
Korean	04T3134	
Polish	04T3135	

Table 24. Parts list-Windows 7 Professional (64-bit) with Service Pack 1 recovery DVDs (continued)

Language	P/N	CRU ID
Portuguese	04T3136	
Romanian	04T3137	
Russian	04T3138	
Serbian-Latin	04T3141	
Simplified Chinese	04T3124	
Slovak	04T3139	
Spanish	04T3140	
Traditional Chinese	04T3125	
Turkish	04T3142	
US English	04T3143	
US English disable	04T3144	

Windows 7 Ultimate (32-bit) with Service Pack 1 DVDs

Windows 7 Ultimate (32-bit) is preinstalled as the operating system in the following models:
- 3035-CTO
- 3043-CTO

Table 25. Parts list-Windows 7 Ultimate (32-bit) with Service Pack 1 recovery DVDs

Language	P/N	CRU ID
US English	04T3149	N

Windows 7 Ultimate (64-bit) with Service Pack 1 DVDs

Windows 7 Ultimate (64-bit) is preinstalled as the operating system in the following models:
- 3035-CTO
- 3043-CTO

Table 26. Parts list-Windows 7 Ultimate (64-bit) with Service Pack 1 recovery DVDs

Language	P/N	CRU ID
US English	04T3150	N

Windows 7 Starter (32-bit) with Service Pack 1 DVDs

Windows 7 Starter (32-bit) is preinstalled as the operating system in the following models:
- 3035-CTO, 2Gx, 2Hx, 2Jx
- 3043-CTO

Table 27. Parts list-Windows 7 Starter (32-bit) with Service Pack 1 recovery DVDs

Language	P/N	CRU ID
Arabic	04T3203	*
Brazilian Portuguese	04T3204	
French	04T3206	
Portuguese	04T3207	
Russian	04T3208	
Spanish	04T3209	
Turkish	04T3210	
Indian English	04T3205	
US English	04T3211	

Common service tools

Table 28. Parts list-Common service tools

Tool	P/N
Screwdriver kit	04W2217
1/4" drive spinner handle	1650840
1/4" Sq. to 1/4" hex torx adapter	93F2838
TR7-TR-10 tamper resistant torx bits	00P6967
Removal tool antenna RF connector	08K7159
USB 2.0 CD-RW/DVD-ROM combo drive II	40Y8687
USB cable	40Y8704
USB floppy diskette drive for maintenance diskette	05K9283
USB floppy diskette drive tool kit	27L3452
Test card for integrated Smart Card	42W7820
LENOVO ThinkPad Hardware Maintenance Diskette Version 1.76 or later **Note:** Download the file from the following Web site: http://www.lenovo.com/support	—

Appendix A. Notices

Lenovo may not offer the products, services, or features discussed in this document in all countries. Consult your local Lenovo representative for information on the products and services currently available in your area. Any reference to a Lenovo product, program, or service is not intended to state or imply that only that Lenovo product, program, or service may be used. Any functionally equivalent product, program, or service that does not infringe any Lenovo intellectual property right may be used instead. However, it is the user's responsibility to evaluate and verify the operation of any other product, program, or service.

Lenovo may have patents or pending patent applications covering subject matter described in this document. The furnishing of this document does not give you any license to these patents. You can send license inquiries, in writing, to:

Lenovo (United States), Inc.
1009 Think Place - Building One
Morrisville, NC 27560
U.S.A.
Attention: Lenovo Director of Licensing

LENOVO PROVIDES THIS PUBLICATION “AS IS” WITHOUT WARRANTY OF ANY KIND, EITHER EXPRESS OR IMPLIED, INCLUDING, BUT NOT LIMITED TO, THE IMPLIED WARRANTIES OF NON-INFRINGEMENT, MERCHANTABILITY OR FITNESS FOR A PARTICULAR PURPOSE. Some jurisdictions do not allow disclaimer of express or implied warranties in certain transactions, therefore, this statement may not apply to you.

This information could include technical inaccuracies or typographical errors. Changes are periodically made to the information herein; these changes will be incorporated in new editions of the publication. Lenovo may make improvements and/or changes in the product(s) and/or the program(s) described in this publication at any time without notice.

The products described in this document are not intended for use in implantation or other life support applications where malfunction may result in injury or death to persons. The information contained in this document does not affect or change Lenovo product specifications or warranties. Nothing in this document shall operate as an express or implied license or indemnity under the intellectual property rights of Lenovo or third parties. All information contained in this document was obtained in specific environments and is presented as an illustration. The result obtained in other operating environments may vary.

Lenovo may use or distribute any of the information you supply in any way it believes appropriate without incurring any obligation to you.

Any references in this publication to non-Lenovo Web sites are provided for convenience only and do not in any manner serve as an endorsement of those Web sites. The materials at those Web sites are not part of the materials for this Lenovo product, and use of those Web sites is at your own risk.

Any performance data contained herein was determined in a controlled environment. Therefore, the result obtained in other operating environments may vary significantly. Some measurements may have been made on development-level systems and there is no guarantee that these measurements will be the same on generally available systems. Furthermore, some measurements may have been estimated through extrapolation. Actual results may vary. Users of this document should verify the applicable data for their specific environment.

© Copyright Lenovo 2012

Electronic emissions notices

For electronic emission information on Class B digital devices, refer to the corresponding information in the *User Guide*.

Trademarks

The following terms are trademarks of Lenovo in the United States, other countries or both:

Active Protection System
Lenovo
ThinkPad
ThinkVantage
TrackPoint

Windows is a trademark of the Microsoft group of companies.

The following terms are trademarks of Intel Corporation or its subsidiaries in the United States, other countries, or both:

Intel
Intel Celeron
Intel Centrino
Intel Core
Intel Pentium

Other company, product, or service names may be the trademarks or service marks of others.

ThinkPad®

Part Number: 0A95858_03

Printed in China

(1P) P/N: 0A95858_03