ThinkPad

ThinkPad SL410, L410, L412, SL510, L510, and L512 Hardware Maintenance Manual

ThinkPad

ThinkPad SL410, L410, L412, SL510, L510, and L512 Hardware Maintenance Manual

Note

Before using this information and the product it supports, be sure to read the general information under Appendix A “Notices” on page 273.

Third Edition (February)

© Copyright Lenovo 2009, 2011.

LENOVO products, data, computer software, and services have been developed exclusively at private expense and are sold to governmental entities as commercial iterms as defined by 48 C.F.R.2.101with limited and restricted rights to use, reproduction and disclosure.

LIMITED AND RESTRICTED RIGHTS NOTICE: If products, data, computer software, or services are delivered pursuant a General Services Administration “GSA” contract, use, reproduction, or disclosure is subject to restrictions set forth in Contract No. GS-35F-05925.

Contents

About this manual v

Chapter 1. Safety information 1

General safety 1
Electrical safety 2
Safety inspection guide 3
Handling devices that are sensitive to electrostatic discharge 3
Grounding requirements 4
Safety notices (multilingual translations) 4
Laser compliance statement (multilingual translations) 16

Chapter 2. Important service information 25

Strategy for replacing FRUs 25
Strategy for replacing a hard disk drive . . . 26
Important notice for replacing a system board 26
How to use error message 26
Strategy for replacing FRUs for CTO, CMV, and GAV 26
Product definition 26
FRU identification for CTO, CMV, and GAV products 27

Chapter 3. General checkout 29

What to do first 29
Checkout guide 30
Diagnostics using PC-Doctor for DOS 30
Lenovo ThinkVantage Toolbox (Lenovo System Toolbox) 33
PC-Doctor for Rescue and Recovery 33
FRU tests 33
Power system checkout 34
Checking the ac power adapter 35
Checking operational charging 35
Checking the battery pack 36
Checking the backup battery 36

Chapter 4. Related service information 39

Restoring the factory contents by using Recovery Disc Set 39
Passwords 40
Power-on password 40
Hard-disk password 40
Supervisor password 41
How to remove the power-on password . . . 41
How to remove the hard-disk password . . . 41
Power management 42
Screen blank mode 42
Sleep (standby) mode 42
Hibernation mode 43
Symptom-to-FRU index 44
Numeric error codes 44
Error messages 46
No-beep symptoms 46
LCD-related symptoms 47
Intermittent problems 47
Undetermined problems 48

Chapter 5. Status indicators 49

Chapter 6. Fn key combinations . . . 51

Chapter 7. FRU replacement notices 55

Screw notices 55
Retaining serial numbers 56
Restoring the serial number of the system unit 56
Retaining the UUID 56
Reading or writing the ECA information . . . 57

Chapter 8. Removing and replacing a FRU 59

1010 Battery pack 59
1020 ExpressCard blank bezel and Media Card blank bezel 60
1030 Optical drive or travel cover 62
1040 Thermal cover 63
1050 Hard disk drive (HDD) assembly 64
1060 DIMM 65
1070 Fan assembly 66
1080 CPU 70
1090 SIM slot cover 71
1100 Wireless WAN slot cover and PCI Express Mini Card for wireless WAN 73
1110 Palm rest assembly with cables 75
1120 PCI Express Mini Card for wireless LAN . . 78
1130 Backup battery 79
1140 ***Bluetooth*** daughter card (BDC-2) 80
1150 Media Card Reader slot board and Media Card Reader cable assembly 81
1160 Keyboard 83
1170 Keyboard bezel 86

© Copyright Lenovo 2009, 2011

1180 LCD unit 87
1190 Top shielding assembly 91
1200 System board assembly. 94
1210 USB connector board and USB cable assembly 101
1220 DC-in cable and base cover 103
2010 LCD front bezel 107
2020 Speaker assembly 108
2030 Integrated camera 109
2040 Antenna assembly 110
2050 Hinges, LCD panel, LCD cable, and LCD rear cover assembly 111

Chapter 9. Locations 115

Front view 115
Rear view. 116
Bottom view 117

Chapter 10. Parts list 119

Overall 120
LCD FRUs 230
Keyboard. 252
Miscellaneous parts 254
AC power adapters 255
Power cords 256
Recovery discs 257
Windows XP Professional (32 bit) DVDs . . . 257
Windows Vista Business (32 bit) DVDs . . . 259
Windows Vista Home Basic (32 bit) DVDs . . 259
Windows Vista Home Premium (32 bit) DVDs 260
Windows 7 Home Basic (32 bit) DVDs. . . . 261
Windows 7 Home Premium (32 bit) DVDs . . 262
Windows 7 Home Premium (64 bit) DVDs . . 264
Windows 7 Professional (32 bit) DVDs. . . . 265
Windows 7 Professional (64 bit) DVDs. . . . 268
Windows 7 Starter (32 bit) DVDs 270
Common service tools 271

Appendix A. Notices 273

European Union - Compliance to the Electromagnetic Compatibility Directive 274
Trademarks 274

About this manual

This manual contains service and reference information for the following ThinkPad® Notebook products.

ThinkPad SL410

MT 2842 and 2874

ThinkPad L410

MT 2931 and 0616

ThinkPad L412

MT 0530, 0553, 0591, 0585, 4403, and 4404

ThinkPad SL510

MT 2847 and 2875

ThinkPad L510

MT 2873 and 5072

ThinkPad L512

MT 2597, 2598, 2599, 2550, 4444, and 4447

Use this manual along with the advanced diagnostic tests to troubleshoot problems.

Important:

This manual is intended only for trained service technicians who are familiar with ThinkPad Notebook products. Use this manual along with the advanced diagnostic tests to troubleshoot problems effectively.

Before servicing a ThinkPad Notebook product, be sure to read all the information under Chapter 1 “Safety information” on page 1 and Chapter 2 “Important service information” on page 25.

© Copyright Lenovo 2009, 2011

Chapter 1. Safety information

This chapter presents following safety information that you need to be familiar with before you service a ThinkPad Notebook.

- “General safety” on page 1
- “Electrical safety” on page 2
- “Safety inspection guide” on page 3
- “Handling devices that are sensitive to electrostatic discharge” on page 3
- “Grounding requirements” on page 4
- “Safety notices (multilingual translations)” on page 4
- “Laser compliance statement (multilingual translations)” on page 16

General safety

Follow these rules to ensure general safety:

- Observe good housekeeping in the area of the machines during and after maintenance.
- When lifting any heavy object:
  1. Make sure that you can stand safely without slipping.
  2. Distribute the weight of the object equally between your feet.
  3. Use a slow lifting force. Never move suddenly or twist when you attempt to lift.
  4. Lift by standing or by pushing up with your leg muscles; this action removes the strain from the muscles in your back. *Do not attempt to lift any object that weighs more than 16 kg (35 lb) or that you think is too heavy for you.*
- Do not perform any action that causes hazards to the customer, or that makes the equipment unsafe.
- Before you start the machine, make sure that other service technicians and the customer's personnel are not in a hazardous position.
- Place removed covers and other parts in a safe place, away from all personnel, while you are servicing the machine.
- Keep your toolcase away from walk areas so that other people will not trip over it.
- Do not wear loose clothing that can be trapped in the moving parts of a machine. Make sure that your sleeves are fastened or rolled up above your elbows. If your hair is long, fasten it.
- Insert the ends of your necktie or scarf inside clothing or fasten it with a nonconductive clip, about 8 centimeters (3 inches) from the end.
- Do not wear jewelry, chains, metal-frame eyeglasses, or metal fasteners for your clothing.

  Attention: Metal objects are good electrical conductors.
- Wear safety glasses when you are hammering, drilling, soldering, cutting wire, attaching springs, using solvents, or working in any other conditions that might be hazardous to your eyes.
- After service, reinstall all safety shields, guards, labels, and ground wires. Replace any safety device that is worn or defective.
- Reinstall all covers correctly before returning the machine to the customer.
- Fan louvers on the machine help to prevent overheating of internal components. Do not obstruct fan louvers or cover them with labels or stickers.

© Copyright Lenovo 2009, 2011

Electrical safety

Observe the following rules when working on electrical equipment.

Important: Use only approved tools and test equipment. Some hand tools have handles covered with a soft material that does not insulate you when working with live electrical currents.

Many customers have, near their equipment, rubber floor mats that contain small conductive fibers to decrease electrostatic discharges. Do not use this type of mat to protect yourself from electrical shock.

- Find the room emergency power-off (EPO) switch, disconnecting switch, or electrical outlet. If an electrical accident occurs, you can then operate the switch or unplug the power cord quickly.
- Do not work alone under hazardous conditions or near equipment that has hazardous voltages.
- Disconnect all power before:
  - Performing a mechanical inspection
  - Working near power supplies
  - Removing or installing main units
- Before you start to work on the machine, unplug the power cord. If you cannot unplug it, ask the customer to power-off the wall box that supplies power to the machine, and to lock the wall box in the off position.
- If you need to work on a machine that has *exposed* electrical circuits, observe the following precautions:
  - Ensure that another person, familiar with the power-off controls, is near you.

    Attention: Another person must be there to switch off the power, if necessary.
  - Use only one hand when working with powered-on electrical equipment; keep the other hand in your pocket or behind your back.

    Attention: An electrical shock can occur only when there is a complete circuit. By observing the above rule, you may prevent a current from passing through your body.
  - When using testers, set the controls correctly and use the approved probe leads and accessories for that tester.
  - Stand on suitable rubber mats (obtained locally, if necessary) to insulate you from grounds such as metal floor strips and machine frames.

  Observe the special safety precautions when you work with very high voltages; Instructions for these precautions are in the safety sections of maintenance information. Use extreme care when measuring high voltages.
- Regularly inspect and maintain your electrical hand tools for safe operational condition.
- Do not use worn or broken tools and testers.
- *Never assume* that power has been disconnected from a circuit. First, *check* that it has been powered off.
- Always look carefully for possible hazards in your work area. Examples of these hazards are moist floors, nongrounded power extension cables, power surges, and missing safety grounds.
- Do not touch live electrical circuits with the reflective surface of a plastic dental mirror. The surface is conductive; such touching can cause personal injury and machine damage.
- Do not service the following parts *with the power on* when they are removed from their normal operating places in a machine:
  - Power supply units
  - Pumps
  - Blowers and fans
  - Motor generators
  - Similar units to listed above

  This practice ensures correct grounding of the units.
- If an electrical accident occurs:

- Use caution; do not become a victim yourself.
- Switch off power.
- Send another person to get medical aid.

Safety inspection guide

The purpose of this inspection guide is to assist you in identifying potentially unsafe conditions. As each machine was designed and built, required safety items were installed to protect users and service technicians from injury. This guide addresses only those items. You should use good judgment to identify potential safety hazards due to attachment of non-ThinkPad features or options not covered by this inspection guide.

If any unsafe conditions are present, you must determine how serious the apparent hazard could be and whether you can continue without first correcting the problem.

Consider these conditions and the safety hazards they present:

- Electrical hazards, especially primary power (primary voltage on the frame can cause serious or fatal electrical shock)
- Explosive hazards, such as a damaged CRT face or a bulging capacitor
- Mechanical hazards, such as loose or missing hardware

To determine whether there are any potentially unsafe conditions, use the following checklist at the beginning of every service task. Begin the checks with the power off, and the power cord disconnected.

Checklist:

1. Check exterior covers for damage (loose, broken, or sharp edges).
2. Power off the computer. Disconnect the power cord.
3. Check the power cord for:
   a. A third-wire ground connector in good condition. Use a meter to measure third-wire ground continuity for 0.1 ohm or less between the external ground pin and the frame ground.
   b. The power cord should be the type specified in the parts list.
   c. Insulation must not be frayed or worn.
4. Check for cracked or bulging batteries.
5. Remove the cover.
6. Check for any obvious non-ThinkPad alterations. Use good judgment as to the safety of any non-ThinkPad alterations.
7. Check inside the unit for any obvious unsafe conditions, such as metal filings, contamination, water or other liquids, or signs of fire or smoke damage.
8. Check for worn, frayed, or pinched cables.
9. Check that the power-supply cover fasteners (screws or rivets) have not been removed or tampered with.

Handling devices that are sensitive to electrostatic discharge

Any computer part containing transistors or integrated circuits (ICs) should be considered sensitive to electrostatic discharge (ESD.) ESD damage can occur when there is a difference in charge between objects. Protect against ESD damage by equalizing the charge so that the machine, the part, the work mat, and the person handling the part are all at the same charge.

Notes:

1. Use product-specific ESD procedures when they exceed the requirements noted here.

2. Make sure that the ESD protective devices you use have been certified (ISO 9000) as fully effective.

When handling ESD-sensitive parts:

- Keep the parts in protective packages until they are inserted into the product.
- Avoid contact with other people.
- Wear a grounded wrist strap against your skin to eliminate static on your body.
- Prevent the part from touching your clothing. Most clothing is insulative and retains a charge even when you are wearing a wrist strap.
- Use a grounded work mat to provide a static-free work surface. The mat is especially useful when handling ESD-sensitive devices.
- Select a grounding system, such as those listed below, to provide protection that meets the specific service requirement.

  Notes: The use of a grounding system to guard against ESD damage is desirable but not necessary.

  – Attach the ESD ground clip to any frame ground, ground braid, or green-wire ground.
  – When working on a double-insulated or battery-operated system, use an ESD common ground or reference point. You can use coax or connector-outside shells on these systems.
  – Use the round ground prong of the ac plug on ac-operated computers.

Grounding requirements

Electrical grounding of the computer is required for operator safety and correct system function. Proper grounding of the electrical outlet can be verified by a certified electrician.

Safety notices (multilingual translations)

The safety notices in this section are provided in the following languages:
- English
- Arabic
- Brazilian Portuguese
- French
- German
- Hebrew
- Japanese
- Korean
- Spanish
- Traditional Chinese

DANGER

Before the computer is powered on after FRU replacement, make sure all screws, springs, and other small parts are in place and are not left loose inside the computer. Verify this by shaking the computer and listening for rattling sounds. Metallic parts or metal flakes can cause electrical shorts.

DANGER

Some standby batteries contain a small amount of nickel and cadmium. Do not disassemble a standby battery, recharge it, throw it into fire or water, or short-circuit it. Dispose of the battery as required by local ordinances or regulations. Use only the battery in the appropriate parts listing. Use of an incorrect battery can result in ignition or explosion of the battery.

DANGER

The battery pack contains small amounts of nickel. Do not disassemble it, throw it into fire or water, or short-circuit it. Dispose of the battery pack as required by local ordinances or regulations. Use only the battery in the appropriate parts listing when replacing the battery pack. Use of an incorrect battery can result in ignition or explosion of the battery.

DANGER

The lithium battery can cause a fire, an explosion, or a severe burn. Do not recharge it, remove its polarized connector, disassemble it, heat it above 100°C (212°F), incinerate it, or expose its cell contents to water. Dispose of the battery as required by local ordinances or regulations. Use only the battery in the appropriate parts listing. Use of an incorrect battery can result in ignition or explosion of the battery.

DANGER

If the LCD breaks and the fluid from inside the LCD gets into your eyes or on your hands, immediately wash the affected areas with water for at least 15 minutes. Seek medical care if any symptoms from the fluid are present after washing.

DANGER

To avoid shock, do not remove the plastic cover that protects the lower part of the inverter card.

DANGER

Though the main batteries have low voltage, a shorted or grounded battery can produce enough current to burn personnel or combustible materials.

DANGER

Unless hot swap is allowed for the FRU being replaced, do as follows before removing it: power off the computer, unplug all power cords from electrical outlets, remove the battery pack, and disconnect any interconnecting cables.

خطر

قبل اعادة تشغيل الحاسب بعد الانتهاء من استبدال FRU، تأكد من أنه قد تم اعادة كل من المسامير و السوست وكل الأجزاء الصغيرة الأخرى في أماكنهم ولم يتم فقدهم داخل الحاسب.
ويمكن التحقق من ذلك عن طريق هز الحاسب والاستماع لأي صوت صاخب يصدر منه.
قد تؤدي الأجزاء أو الرقائق المعدنية الى حدوث دائرة قصر.

خطر

تحتوي بعض البطاريات الاحتياطية على كمية صغيرة من مادتي النيكل والكادميوم. لا تقم بفك أو اعادة شحن البطارية الاحتياطية ولا تقم أيضا بالقاءها في النار أو الماء ولا تتسبب في احداث دائرة قصر بها. قم بالتخلص من البطارية كما هو موضح في القوانين المحلية.
استخدم نوع البطارية المحدد والذي يوصى باستخدامه. حيث أنه قد يؤدي استخدام نوع بطارية غير صحيح الى اشتعالها أو انفجارها.

خطر

تحتوي حزمة البطارية على كمية صغيرة من مادة النيكل. لا تقم بفكها أو القاءها في النار أو الماء ولا تتسبب في احداث دائرة قصر بها. تخلص من حزمة البطارية وفقا لما هو موضح في القوانين المحلية. قم، عند استبدال حزمة البطارية، باستخدام الأنواع المحددة فقط والتي يوصى باستخدامها. حيث أنه قد يؤدي استخدام نوع بطارية غير صحيح الى اشتعالها أو انفجارها.

خطر

قد تتسبب بطارية الليثيوم في حدوث حريق أو انفجار أو حدوث حروق شديدة. لا تقم باعادة شحن البطارية أو ازالة موصل الاستقطاب الخاص بها ولا تحاول أيضا فكها أو تسخينها لأكثر من ١٠٠ درجة مئوية (٢١٢ا فهرنهايت) أو حرقها أو تعريض محتويات الخانة الخاصة بها للماء. قم بالتخلص من البطارية وفقا لما هو موضح في القوانين المحلية. استخدم نوع البطارية المحدد والذي يوصى باستخدامه. حيث أنه قد يؤدي استخدام نوع بطارية غير صحيح الى اشتعالها أو انفجارها.

خطر

اذا ما انكسرت شاشة LCD ولامس السائل الداخلي عينيك أو يديك، قم في الحال بغسلهما بالماء لمدة لا تقل عن ١٥ دقيقة. اذا ما وجدت أي أعراض بعد الغسل اطلب عندئذ المساعدة الطبية.

خطر

لتجنب التعرض لأي صدمات، لا تقم بإزالة الغطاء البلاستيكي الذي يحمي الجزء الأسفل من بطاقة العاكس.

خطر

على الرغم من أن البطاريات الرئيسية يكون لها جهد منخفض، الا أنه قد تقوم البطاريات التي حدث قصور بها أو التي تم توصيلها أرضيا باصدار تيار يكفي لحدوث حروق للأفراد أو تعرض المواد القابلة للاشتعال للحريق.

خطر

ما لم يتم السماح بالتبديل الفوري لأي FRU الجاري استبداله بدون ضرورة اغلاق النظام، قم بتنفيذ ما يلي قبل ازالته. قم بايقاف تشغيل الحاسب ونزع كل أسلاك الطاقة من المخارج الكهربائية وقم أيضا بازالة حزمة البطارية ثم قم بفصل أي كابلات متصلة.

PERIGO

Antes de ligar o computador após a substituição da FRU, certifique-se de que todos os parafusos, molas e outras peças pequenas estejam no lugar e não estejam soltos dentro do computador. Verifique isso sacudindo o computador e procurando ouvir sons de peças soltas. Peças metálicas ou lascas de metal podem causar curto-circuito.

PERIGO

Algumas baterias reserva contêm uma pequena quantidade de níquel e cádmio. Não desmonte uma bateria reserva, recarregue-a, jogue-a no fogo ou na água, ou deixe-a entrar em curto-circuito. Descarte a bateria conforme requerido pelas leis ou regulamentos locais. Use somente a bateria nas partes listadas apropriadas. O uso de uma bateria incorreta pode resultar em combustão ou explosão da bateria.

PERIGO

O pacote da bateria contém uma pequena quantidade de níquel. Não o desmonte, jogue-o no fogo ou na água, ou deixe-o entrar em curto-circuito. Descarte o pacote da bateria conforme requerido pelas leis ou regulamentos locais. Use somente a bateria nas partes listadas apropriadas ao substituir o pacote da bateria. O uso de uma bateria incorreta pode resultar em combustão ou explosão da bateria.

PERIGO

A bateria de lítio pode causar incêndio, explosão ou graves queimaduras. Não a recarregue, remova seu conector polarizado, desmonte-a, aqueça-a acima de 100°C (212°F), incinere-a, ou exponha o conteúdo de sua célula à água. Descarte a bateria conforme requerido pelas leis ou regulamentos locais. Use somente a bateria nas partes listadas apropriadas. O uso de uma bateria incorreta pode resultar em combustão ou explosão da bateria.

PERIGO

Se o LCD quebrar e o fluido de dentro dele entrar em contato com seus olhos ou com suas mãos, lave as áreas afetadas imediatamente com água durante pelo menos 15 minutos. Procure cuidados médicos se algum sintoma causado pelo fluido surgir após a lavagem.

PERIGO

Para evitar choque elétrico, não remova a capa plástica que protege a parte inferior da placa inversora.

PERIGO

Embora as principais baterias possuam baixa voltagem, uma bateria em curto-circuito ou aterrada pode produzir corrente o bastante para queimar materiais de pessoal ou inflamáveis.

PERIGO

A menos que uma hot swap seja permitida para a FRU que está sendo substituída, faça o seguinte antes de removê-la: desligue o computador, desconecte todos os cabos de energia das tomadas, remova o pacote de baterias e desconecte quaisquer cabos de interconexão.

DANGER

Avant de remettre l'ordinateur sous tension après remplacement d'une unité en clientèle, vérifiez que tous les ressorts, vis et autres pièces sont bien en place et bien fixées. Pour ce faire, secouez l'unité et assurez-vous qu'aucun bruit suspect ne se produit. Des pièces métalliques ou des copeaux de métal pourraient causer un court-circuit.

DANGER

Certaines batteries de secours contiennent du nickel et du cadmium. Ne les démontez pas, ne les rechargez pas, ne les exposez ni au feu ni à l'eau. Ne les mettez pas en court-circuit. Pour les mettre au rebut, conformez-vous à la réglementation en vigueur. Lorsque vous remplacez la pile de sauvegarde ou celle de l'horloge temps réel, veillez à n'utiliser que les modèles cités dans la liste de pièces détachées adéquate. Une batterie ou une pile inappropriée risque de prendre feu ou d'exploser.

DANGER

La batterie contient du nickel. Ne la démontez pas, ne l'exposez ni au feu ni à l'eau. Ne la mettez pas en court-circuit. Pour la mettre au rebut, conformez-vous à la réglementation en vigueur. Lorsque vous remplacez la batterie, veillez à n'utiliser que les modèles cités dans la liste de pièces détachées adéquate. En effet, une batterie inappropriée risque de prendre feu ou d'exploser.

DANGER

La pile de sauvegarde contient du lithium. Elle présente des risques d'incendie, d'explosion ou de brûlures graves. Ne la rechargez pas, ne retirez pas son connecteur polarisé et ne la démontez pas. Ne l'exposez pas à une temperature supérieure à 100°C, ne la faites pas brûler et n'en exposez pas le contenu à l'eau. Mettez la pile au rebut conformément à la réglementation en vigueur. Une pile inappropriée risque de prendre feu ou d'exploser.

DANGER

Si le panneau d'affichage à cristaux liquides se brise et que vous recevez dans les yeux ou sur les mains une partie du fluide, rincez-les abondamment pendant au moins quinze minutes. Consultez un médecin si des symptômes persistent après le lavage.

DANGER

Afin d'éviter tout risque de choc électrique, ne retirez pas le cache en plastique protégeant la partie inférieure de la carte d'alimentation.

DANGER

Bien que le voltage des batteries principales soit peu élevé, le court-circuit ou la mise à la masse d'une batterie peut produire suffisamment de courant pour brûler des matériaux combustibles ou causer des brûlures corporelles graves.

DANGER

Si le remplacement à chaud n'est pas autorisé pour l'unité remplaçable sur site que vous remplacez, procédez comme suit avant de retirer l'unité : mettez l'ordinateur hors tension, débranchez tous les cordons d'alimentation des prises de courant, retirez le bloc de batterie et déconnectez tous les câbles d'interconnexion.

VORSICHT

Bevor nach einem FRU-Austausch der Computer wieder angeschlossen wird, muß sichergestellt werden, daß keine Schrauben, Federn oder andere Kleinteile fehlen oder im Gehäuse vergessen wurden. Der Computer muß geschüttelt und auf Klappergeräusche geprüft werden. Metallteile oder-splitter können Kurzschlüsse erzeugen.

VORSICHT

Die Bereitschaftsbatterie, die sich unter dem Diskettenlaufwerk befindet, kann geringe Mengen Nickel und Cadmium enthalten. Sie darf nur durch die Verkaufsstelle oder den IBM Kundendienst ausgetauscht werden. Sie darf nicht zerlegt, wiederaufgeladen, kurzgeschlossen, oder Feuer oder Wasser ausgesetzt werden. Die Batterie kann schwere Verbrennungen oder Verätzungen verursachen. Bei der Entsorgung die örtlichen Bestimmungen für Sondermüll beachten. Beim Ersetzen der Bereitschafts-oder Systembatterie nur Batterien des Typs verwenden, der in der Ersatzteilliste aufgeführt ist. Der Einsatz falscher Batterien kann zu Entzündung oder Explosion führen.

VORSICHT

Akkus enthalten geringe Mengen von Nickel. Sie dürfen nicht zerlegt, wiederaufgeladen, kurzgeschlossen, oder Feuer oder Wasser ausgesetzt werden. Bei der Entsorgung die örtlichen Bestimmungen für Sondermüll beachten. Beim Ersetzen der Batterie nur Batterien des Typs verwenden, der in der Ersatzteilliste aufgeführt ist. Der Einsatz falscher Batterien kann zu Entzündung oder Explosion führen.

VORSICHT

Die Systembatterie ist eine Lithiumbatterie. Sie kann sich entzünden, explodieren oder schwere Verbrennungen hervorrufen. Batterien dieses Typs dürfen nicht aufgeladen, zerlegt, über 100°C erhitzt oder verbrannt werden. Auch darf ihr Inhalt nicht mit Wasser in Verbindung gebracht oder der zur richtigen Polung angebrachte Verbindungsstecker entfernt werden. Bei der Entsorgung die örtlichen Bestimmungen für Sondermüll beachten. Beim Ersetzen der Batterie nur Batterien des Typs verwenden, der in der Ersatzteilliste aufgeführt ist. Der Einsatz falscher Batterien kann zu Entzündung oder Explosion führen.

VORSICHT

Die Leuchtstoffröhre im LCD-Bildschirm enthält Quecksilber. Bei der Entsorgung die örtlichen Bestimmungen für Sondermüll beachten. Der LCD-Bildschirm besteht aus Glas und kann zerbrechen, wenn er unsachgemäß behandelt wird oder der Computer auf den Boden fällt. Wenn der Bildschirm beschädigt ist und die darin befindliche Flüssigkeit in Kontakt mit Haut und Augen gerät, sollten die betroffenen Stellen mindestens 15 Minuten mit Wasser abgespült und bei Beschwerden anschließend ein Arzt aufgesucht werden.

VORSICHT

Aus Sicherheitsgründen die Kunststoffabdeckung, die den unteren Teil der Spannungswandlerplatine umgibt, nicht entfernen.

VORSICHT

Obwohl Hauptbatterien eine niedrige Spannung haben, können sie doch bei Kurzschluß oder Erdung genug Strom abgeben, um brennbare Materialien zu entzünden oder Verletzungen bei Personen hervorzurufen.

VORSICHT

Wenn ein Austausch der FRU bei laufendem Betrieb nicht erlaubt ist, gehen Sie beim Austausch der FRU wie folgt vor: Schalten Sie den Computer aus, ziehen Sie alle Netzkabel von den Netzsteckdosen ab, entfernen Sie den Akku und ziehen Sie alle miteinander verbundenen Kabel ab.

סכנה

לפני הפעלת המחשב לאחר החלפת FRU יש לוודא שכל הברגים, הקפיצים, וחלקים קטנים אחרים
נמצאים במקומם ואינם חופשיים לזוז בתוך המחשב. כדי לוודא זאת, יש לטלטל את המחשב
ולהקשיב לגילוי קולות שקשוק. חלקי או שבבי מתכת עלולים לגרום לקצרים חשמליים.

סכנה

סוללות המתנה מסוימות מכילות כמות קטנה של ניקל וקדמיום. אין לפרק סוללת המתנה,
לטעון אותה מחדש, להשליך אותה לאש או למים או לקצר אותה. יש לסלק את הסוללה
כנדרש על ידי התקנות והחוקים המקומיים. יש להשתמש רק בסוללה המופיעה ברשימת החלקים
המתאימה. שימוש בסוללה לא מתאימה עלול לגרום להצתה או התפוצצות של הסוללה.

סכנה

מארז הסוללה מכיל כמות קטנה של ניקל וקדמיום. אין לפרק את מארז הסוללה, להשליך אותו
לאש או למים או לקצר אותו. יש לסלק את מארז הסוללה הסוללה כנדרש על ידי התקנות
והחוקים המקומיים. יש להשתמש רק בסוללה המופיעה ברשימת החלקים המתאימה בזמן
החלפת מארז הסוללה. שימוש בסוללה לא מתאימה עלול לגרום להצתה או התפוצצות של
הסוללה.

סכנה

סוללת הליתיום עלולה לגרום לשריפה, להתפוצצות או לכוויות קשות. אין לטעון אותה מחדש, לפרק את המחבר המקוטב שלה, לפרק אותה או לחמם אותה לטמפרטורה העולה על 100 מעלות צלזיוס. אין לשרוף את הסוללה ואין לחשוף את תוכן הנא למים. יש לסלק את הסוללה כנדרש בתקנות ובחוקים המקומיים. יש להשתמש רק בסוללה המופיעה ברשימת החלקים המתאימים. שימוש בסוללה אחרת עלול לגרום לסכנת שריפה או התפוצצות.

סכנה

אם מסך הנגיש הנוזלי (LCD) נשבר והנוזל מתוך המסך בא במגע עם עיניכם או ידיכם, שטפו את האזורים הנגועים מיד במים במשך 15 דקות לפחות. פנו לקבלת עזרה רפואית אם תסמינים הנובעים מהמגע עם הנוזל נמשכים לאחר השטיפה.

סכנה

כדי למנוע התחשמלות, אין להסיר את מכסה הפלסטיק המגן על חלקו התחתון של הכרטיס ההפוך.

סכנה

אף שהסוללות הראשיות הן בעלות מתח נמוך, סוללה מקוצרת או מוארקת עלולה להפיק זרם משפיע לגרימת כוויות או להצתת חומרים דליקים.

סכנה

אלא אם כן מותרת 'החלפה חמה' של ה-FRU המוחלף, פעלו כדלהלן לפני הסרתו:
כבו את המחשב, נתקו את כל כבלי החשמל מהשקעים, הוציאו את מארז הסוללות ונתקו את כל הכבלים המחוברים.

危険

FRU の交換後、 ThinkPad の電源を入れる前に、ねじ、バネ、その他の小さな部品がすべて正しい位置にあり、また ThinkPad の内部で緩んでいないことを確認してください。
これを確認するには、 ThinkPad を振って、カチャカチャと音がしないか確かめます。金属部品や金属破片はショートの原因になることがあります。

危険

予備バッテリーの中には少量のニッケルとカドミウムが含まれているものがあります。したがって、予備バッテリーの分解、再充電、火または水の中への投棄、またはショートさせることは決して行わないでください。バッテリーを廃棄する場合は地方自治体の条例に従ってください。適切なパーツ・リストにあるバッテリーだけを使用してください。誤ったバッテリーを使用すると、バッテリーが発火したり、爆発したりすることがあります。

危険

バッテリー・パックには少量のニッケルが含まれています。バッテリー・パックを分解したり、火または水の中に投げ込んだり、ショートさせないでください。バッテリー・パックの廃棄にあたっては、地方自治体の条例または規則に従ってください。バッテリー・パックを交換するときは、適切なパーツ・リストにあるバッテリーだけを使用してください。誤ったバッテリーを使用すると、バッテリーが発火したり、爆発したりすることがあります。

危険

リチウム・バッテリーは、火災、爆発、または重症のやけどを引き起こすことがあります。バックアップ・バッテリーの充電、その極性コネクターの取り外し、バッテリー本体の分解、
100 ℃ (212 ˚ F) 以上への加熱、焼却、電池の中身を水に浸すことはしないでください。バッテリーを廃棄する場合は地方自治体の条例に従ってください。適切なパーツ・リストにあるバッテリーだけを使用してください。誤ったバッテリーを使用すると、バッテリーが発火したり、爆発したりすることがあります。

危険

LCD が破損し、 LCD の中の液体が目に入ったり、手に触れたりした場合は、液体が触れた部分を少なくとも 15 分間洗い流してください。洗い流した後に、液体によって何らかの症状が現れた場合は、医師の治療を受けてください。

危険

感電を防ぐため、インバーター・カードの下部を保護しているプラスチック・カバーを外さないでください。

危険

メイン・バッテリーの電圧は低くても、ショートしたり、接地したバッテリーが、作業者にやけどを負わせたり、可燃物を燃やすだけの電流を発生させる場合があります。

危険

交換しようとしている FRU がホット・スワップに対応していない場合、それを取り外す前に、コンピューターの電源をオフにし、すべての電源コードをコンセントから抜き、バッテリー・パックを取り外して、相互接続しているケーブルをすべて切り離してください。

위험

FRU를 교체하고 나서 컴퓨터 전원을 켜기 전에 모든 나사, 스프링 및 기타 작은 부품들이 올바른 위치에 있는지, 컴퓨터 내부에 단단하게 연결되어 있는지 확인하십시오. 컴퓨터를 흔들어 달깍거리는 소리가 나지 않는지 확인하십시오. 금속 부품 또는 금속 조각은 누전을 일으킬 수 있습니다.

위험

일부 보조 배터리에는 소량의 니켈 및 카트뮴이 포함되어 있습니다. 보조 배터리를 분해하거나, 다시 충전하거나, 불 또는 물에 던지거나, 단락시키지 마십시오. 배터리 팩을 폐기할 때에는 해당 지역의 법률 규정을 따르십시오. 배터리 팩을 교체할 때에는 올바른 배터리만 사용하십시오. 올바르지 않은 배터리를 사용하면 배터리가 발화되거나 폭발할 수 있습니다.

위험

배터리 팩에는 소량의 니켈이 포함되어 있습니다. 배터리 팩을 분해하거나, 불 또는 물에 던지거나, 단락시키지 마십시오. 배터리 팩을 폐기할 때에는 해당 지역의 법률 규정을 따르십시오. 배터리 팩을 교체할 때에는 올바른 배터리만 사용하십시오. 올바르지 않은 배터리를 사용하면 배터리가 발화되거나 폭발할 수 있습니다.

위험

리튬 배터리는 화재, 폭발 또는 심각한 화상을 일으킬 수 있습니다. 리튬 배터리를 다시 충전하거나, 극성 커넥터를 제거하거나, 분해하거나, 100C(212F) 이상으로 가열하거나, 소각하거나, 전지 내용물을 물에 노출시키지 마십시오. 배터리를 폐기할 때에는 해당 지역을 법률 규정을 따르십시오. 올바른 배터리만 사용하십시오. 올바르지 않은 배터리를 사용하면 배터리가 발화되거나 폭발할 수 있습니다.

위험

LCD가 파손되어 LCD 내부의 액체가 눈에 들어가거나 손에 묻으면 즉시 깨끗한 물로 15분 이상 닦아 내십시오. 씻은 후에 조금이라도 이상을 느끼면 즉시 병원에 가서 의사의 진찰을 받아야 합니다.

위험

전기적 위험을 방지하려면 인버터 카드의 아래 부분을 보호하는 플라스틱 덮개를 제거하지 마십시오.

위험

기본 배터리의 전압은 낮지만, 단락되거나 접지된 배터리는 화상을 입히기에 충분한 전류와 가연성 물질을 발생시킬 수 있습니다.

위험

FRU 교체 시 Hot Swap이 지원되지 않는 경우, FRU를 제거하기 전에 컴퓨터의 전원을 끄고, 전기 콘센트에서 전원 코드를 분리하고, 배터리를 제거한 후, 연결된 모든 케이블을 분리하십시오.

PELIGRO

Antes de encender el sistema despues de sustituir una FRU, compruebe que todos los tornillos, muelles y demás piezas pequeñas se encuentran en su sitio y no se encuentran sueltas dentro del sistema. Compruébelo agitando el sistema y escuchando los posibles ruidos que provocarían. Las piezas metálicas pueden causar cortocircuitos eléctricos.

PELIGRO

Algunas baterías de reserva contienen una pequeña cantidad de níquel y cadmio. No las desmonte, ni recargue, ni las eche al fuego o al agua ni las cortocircuite. Deséchelas tal como dispone la normativa local. Utilice sólo baterías que se encuentren en la lista de piezas. La utilización de una batería no apropiada puede provocar la ignición o explosión de la misma.

PELIGRO

Las baterías contienen pequeñas cantidades de níquel. No las desmonte, ni recargue, ni las eche al fuego o al agua ni las cortocircuite. Deséchelas tal como dispone la normativa local. Utilice sólo baterías que se encuentren en la lista de piezas al sustituir la batería. La utilización de una batería no apropiada puede provocar la ignición o explosión de la misma.

PELIGRO

La batería de repuesto es una batería de litio y puede provocar incendios, explosiones o quemaduras graves. No la recargue, ni quite el conector polarizado, ni la desmonte, ni caliente por encima de los 100°C (212°F), ni la incinere ni exponga el contenido de sus celdas al agua. Deséchela tal como dispone la normativa local.

PELIGRO

Si la LCD se rompe y el fluido de su interior entra en contacto con sus ojos o sus manos, lave inmediatamente las áreas afectadas con agua durante 15 minutos como mínimo. Obtenga atención medica si se presenta algún síntoma del fluido despues de lavarse.

PELIGRO

Para evitar descargas, no quite la cubierta de plástico que rodea la parte baja de la tarjeta invertida.

PELIGRO

Aunque las baterías principales tienen un voltaje bajo, una batería cortocircuitada o con contacto a tierra puede producir la corriente suficiente como para quemar material combustible o provocar quemaduras en el personal.

PELIGRO

Salvo que se permita el intercambio en caliente para la unidad sustituible localmente, realice lo siguiente antes de extraerla: apague el sistema, desconecte todos los cables de alimentación de las tomas de alimentación eléctrica, extraiga la batería y desconecte los cables de interconexión.

危險

完成 FRU 更換之後，在開啟電腦的電源之前，請確定所有螺絲、彈簧及其他小零件都已歸位，沒有遺留在電腦內部。
若要確認這一點，請搖晃電腦，聽聽看是否有卡嗒的聲響。
金屬零件或儀錶的火花會造成電線短路。

危險

部分備用電池含有微量的鎳和鎘。請勿拆開備用電池、再充電、丟入火或水中，或使其形成短路。請按照當地法令或規定來棄置電池。

僅限使用零件清單中的電池。使用不適當的電池會導致電池起火或爆炸。

危險

電池套件含有微量的鎳。請勿拆開電池套件、丟入火或水中，或使其形成短路。
請按照當地法令或規定來棄置電池套件。

更換電池套件時，僅限使用零件清單中的電池。使用不適當的電池會導致電池
起火或爆炸。

危險

鋰電池會導致起火、爆炸或嚴重燒傷。請勿再充電、拔除其電極接頭、拆開、
加熱超過 100°C (212°F) 、焚燒，或讓電池組成物浸到水。請按照當地法
令或規定來棄置電池。
僅限使用零件清單中的電池。使用不適當的電池會導致電池起火或爆炸。

危險

如果 LCD 破裂導致 LCD 流出的液體沾到您的眼睛或手，請立即以清水沖洗沾
染部位至少 15 分鐘。如果在清洗後出現該液體所造成的任何症狀，請就醫治
療。

危險

為避免電擊，請勿拆下轉換卡下面的塑膠護蓋。

危險

雖然主電池的電壓很低，但短路或接地電池所產生的電流，仍足以使人燒傷或
使可燃物質起火。

危險

除非 FRU 允許以熱抽換來替換，否則請依下列方式將其移除：將電腦關機，拔除插
座上所有電源線，移除電池包，並拔開任何交互連接的線材。

Laser compliance statement (multilingual translations)

The laser compliance statements in this section are provided in the following languages:

- English
- Arabic
- Brazilian Portuguese
- French
- German
- Hebrew
- Japanese
- Korean
- Spanish
- Traditional Chinese

Some models of ThinkPad Notebook are equipped from the factory with an optical storage device such as a CD-ROM drive or a DVD-ROM drive. Such devices are also sold separately as options. If one of these drives is installed, it is certified in the U.S. to conform to the requirements of the Department of Health and Human Services 21 Code of Federal Regulations (DHHS 21 CFR) Subchapter J for Class 1 laser products. Elsewhere, the drive is certified to conform to the requirements of the International Electrotechnical Commission (IEC) 60825-1 and CENELEC EN 60825-1 for Class 1 laser products.

If a CD-ROM drive, a DVD-ROM drive, or another laser device is installed, note the following:

CAUTION: Use of controls or adjustments or performance of procedures other than those specified herein might result in hazardous radiation exposure.

Opening the CD-ROM drive, the DVD-ROM drive, or any other optical storage device could result in exposure to hazardous laser radiation. There are no serviceable parts inside those drives. **Do not open.**

A CD-ROM drive, a DVD-ROM drive, or any other storage device installed may contain an embedded Class 3A or Class 3B laser diode. Note the following:

DANGER

Emits visible and invisible laser radiation when open. Do not stare into the beam, do not view directly with optical instruments, and avoid direct exposure to the beam.

بعض طرازات حاسب ThinkPad تكون مجهزة من المصنع بأجهزة تخزين ضوئية مثل أقراص تشغيل CD-ROM أو DVD-ROM. ويتم أيضا بيع مثل تلك الأجهزة كاختيارات منفصلة. في حالة تركيب واحد من أقراص التشغيل هذه، فيتم اعتمادها في الولايات المتحدة لتتوافق مع متطلبات Department of Health and Human Services 21 Code of Federal Regulations (DHHS 21 CFR) Subchapter J لمنتجات الليزر من الفئة ١. في مكان آخر، يتم اعتماد قرص التشغيل ليتوافق مع متطلبات International Electrotechnical Commission (IEC) 60825-1 و CENELEC EN 60825-1 لمنتجات الليزر من الفئة ١.

في حالة تركيب أقراص تشغيل CD-ROM أو DVD-ROM أو أي جهاز ليزر آخر، لاحظ ما يلي:

تحذير:

قد ينتج عن استخدام مفاتيح أو تنفيذ عمليات ضبط أو اجراءات بطريقة مختلفة عما هو محدد هنا التعرض لأشعة ليزر في منتهى الخطورة.

قد ينتج عن فتح أقراص تشغيل CD-ROM أو DVD-ROM أو أي جهاز تخزين ضوئي آخر التعرض لأشعة ليزر في منتهى الخطورة. لا توجد أجزاء يمكن صيانتها داخل أقراص التشغيل. **لا تقم بفتحها.**

قد تحتوي أقراص تشغيل CD-ROM أو DVD-ROM أو أي أجهزة تخزين أخرى تم تركيبها على Embedded Class 3A أو Class 3B Laser Diode. لاحظ ما يلي:

خطر

تصدر أشعة ليزر مرئية وغير مرئية عند الفتح. لا تحدق في الشعاع ولا تنظر بطريقة مباشرة باستخدام أدوات ضوئية وتجنب التعرض المباشر للشعاع.

Alguns modelos de computador ThinkPad são equipados na fábrica com um dispositivo de armazenamento ótico, como uma unidade de CD-ROM ou de DVD-ROM. Tais dispositivos também são vendidos separadamente como opcionais. Se uma dessas unidades estiver instalada, ela é certificada nos Estados Unidos em conformidade com os requisitos do Department of Health and Human Services 21 Code of Federal Regulations (DHHS 21 CFR), Subcapítulo J, para produtos a laser da Classe 1. Em outros países, a unidade é certificada em conformidade com os requisitos da International Electrotechnical Commission (IEC) 60825-1 e CENELEC EN 60825-1 para produtos a laser da Classe 1.

Se uma unidade de CD-ROM, uma unidade de DVD-ROM, ou outro dispositivo de laser estiver instalado, observe o seguinte:

CUIDADO: O uso de controles, ou ajustes, ou a execução de procedimentos diferentes dos especificados nesta documentação pode resultar em exposição perigosa à radiação.

Abrir a unidade de CD-ROM, a unidade de DVD-ROM, ou qualquer outro dispositivo de armazenamento ótico pode resultar em exposição perigosa à radiação de laser. Não há peças que permitam manutenção dentro dessas unidades. **Não abra.**

Uma unidade de CD-ROM, uma unidade de DVD-ROM, ou qualquer outro dispositivo de armazenamento instalado pode conter um diodo de laser da Classe 3A ou Classe 3B integrado. Observe o seguinte:

PERIGO

Emite radiação de laser visível e invisível quando aberto. Não olhe diretamente para o feixe a olho nu ou com instrumentos óticos, e evite exposição direta ao feixe.

Certains modèles d'ordinateur ThinkPad sont équipés d'origine d'une unité de stockage optique telle qu'une unité de CD-ROM ou de DVD-ROM. Ces unités sont également vendues séparément en tant qu'options. Si l'une de ces unités est installée, elle est certifiée conforme, aux Etats-Unis, aux normes indiquées dans le sous-chapitre J du DHHS 21 CFR relatif aux produits à laser de classe 1. Dans les autres pays, l'unité est certifiée être un produit à laser de classe 1 conforme aux normes CEI 60825-1 et CENELEC EN 60825-1.

Si une unité de CD-ROM, une unité de DVD-ROM ou une unité à laser d'un autre type est installée, veuillez tenir compte des informations suivantes :

ATTENTION: Pour éviter tout risque d'exposition au rayon laser, respectez les consignes de réglage et d'utilisation des commandes, ainsi que les procédures décrites dans le présent manuel.

L'ouverture de l'unité de CD-ROM, de l'unité de DVD-ROM ou de toute autre unité de stockage optique peut entraîner une exposition à des radiations dangereuses. Aucune pièce de ces unités n'est réparable. **Ne pas ouvrir.**

Une unité de CD-ROM ou de DVD-ROM, ou toute autre unité de stockage optique peut contenir une diode à laser de classe 3A ou 3B. Veuillez tenir compte des informations suivantes :

DANGER

Emet un rayonnement laser visible et invisible lorsque l'unité est ouverte. Evitez toute exposition directe au rayon laser. Evitez de regarder fixement le faisceau ou de l'observer à l'aide d'instruments optiques.

Einige ThinkPad-Modelle sind werkseitig mit einem CD-ROM- oder DVD-ROM-Laufwerk ausgestattet. CD- und DVD-Laufwerke können auch gesondert als Zusatzeinrichtung erworben werden. Die Laufwerke erfüllen die Anforderungen gemäß IEC 60825-1 (International Electrotechnical Commission) und gemäß CENELEC EN 60825-1 für Laserprodukte der Klasse 1.

Bei der Installation von CD-ROM-Laufwerken, DVD-ROM-Laufwerken oder anderen Lasereinheiten Folgendes beachten:

VORSICHT: Die Bedienung des Geräts auf eine andere als die hier beschriebene Weise oder die Nichteinhaltung der hier beschriebenen Einstellungen oder Bedienschritte kann zur Freisetzung gefährlicher Laserstrahlung führen.

Beim Öffnen eines CD-ROM-Laufwerks, DVD-ROM-Laufwerks oder anderen optischen Speicherlaufwerks können gefährliche Laserstrahlungen freigesetzt werden. Die Laufwerke enthalten keine zu wartenden Teile. **Laufwerke nicht öffnen!**

Ein installiertes CD-ROM-Laufwerk, DVD-ROM-Laufwerk oder anderes optisches Speicherlaufwerk kann eine Laserdiode der Klasse 3A oder 3B enthalten. Folgendes beachten:

GEFAHR

Sichtbare und nicht sichtbare Laserstrahlung, wenn geöffnet. Nicht in den Strahl blicken. Keine Lupen oder Spiegel verwenden. Strahlungsbereich meiden.

חלק מדגמי המחשב של ThinkPad מגיעים מהמפעל כשהם מצוידים בהתקן אחסון אופטי כגון כונן תקליטורים או כונן DVD. התקנים כגון אלה נמכרים גם בנפרד כתוספות. אם מותקן אחד מהכוננים הללו, הוא תואם לדרישות קוד 21 של משרד הבריאות האמריקאי בתקנות הפדרליות האמריקאיות (DHHS 21 CFR), תת-פרק J, בנוגע למוצרי לייזר Class 1. במקומות אחרים, כונן זה תואם לדרישות 60825-1 ו-CENELEC EN 60825-1 עבור מוצרי לייזר Class 1 של הוועדה הבין-לאומית לחשמל (IEC).

אם כונן תקליטורים, כונן DVD או התקן לייזר אחר מותקן, שימו לב להערות הבאות:

זהירות:
שימוש בבקרות ובהתאמות שלא צוינו או ביצוע תהליכים שלא צוינו, יכולים לגרום לחשיפה מסוכנת לקרינה.

פתיחת כונן התקליטורים, כונן ה-DVD או כל התקן אחסון אופטי אחר עשוי לגרום לחשיפה לקרינת לייזר מסוכנת. כוננים אלה אינם כוללים רכיבים להחלפה עצמית. **לא לפתוח**.

כונן תקליטורים, כונן DVD או כל התקן אחסון אחר מותקן יכול להכיל דיודת לייזר מובנית Class 3A או Class 3B. שימו לב:

סכנה

קיימת פליטת קרינת לייזר נראית ובלתי נראית כאשר המוצר פתוח. אל תביטו ישירות אל הקרן, אל תביטו אל הקרן ישירות דרך אמצעים אופטיים, והימנעו מחשיפה ישירה לקרן.

ThinkPad の一部のモデルには、工場出荷時から CD-ROM ドライブまたは DVD-ROM ドライブなどの光学式デバイスが装備されています。これらのデバイスはオプションとして別途購入することもできます。このようなドライブが取り付けられている場合は、該当のドライブは、米国保健社会福祉省の連邦規則集 21 条 (DHHS 21 CFR) の副章 J のクラス 1 レーザー製品の要件に準拠しています。その他の国においては、該当のドライブは、国際電気標準会議 (IEC) 60825-1 および CENELEC EN 60825-1 のクラス 1 レーザー製品の要件に準拠しています。

CD-ROM ドライブ、DVD-ROM ドライブ、または他のレーザー・デバイスが取り付けられている場合は、次のことに注意してください。

注意:

本書で指定された内容以外の、お客様による整備、調整、または手順を行った場合、レーザー放射の危険があります。

CD-ROM ドライブ、DVD-ROM ドライブ、または他の光学式デバイスを開けると、レーザー放射の危険があります。これらのドライブの内部には保守が可能な部品はありません。**開けないようにしてください。**

取り付けられている CD-ROM ドライブ、DVD-ROM ドライブ、または他のデバイスには、クラス 3A またはクラス 3B のレーザー・ダイオードが組み込まれていることがあります。次のことに注意してください。

危険

開けるとレーザー光が放射されます。光線を見つめたり、光学機械を使って直接見たり、光線を直接浴びることは避けてください。

ThinkPad 컴퓨터 일부 모델에는 출고 시 CD-ROM 드라이브 또는 DVD-ROM 드라이브와 같은 광 저장 장치가 설치되어 있습니다. 이러한 장치는 옵션 품목으로 개별적으로 구입할 수도 있습니다. 이러한 드라이브 중 하나가 설치되어 있는 경우, 이는 미국 DHHS 21 CFR(Department of Health and Human Services 21 Code of Federal Regulations)의 클래스 1 레이저 제품에 관한 Subchapter J 규정을 준수하고 있습니다. 기타 지역에서는 클래스 1 레이저 제품에 관한 IEC(International Electrotechnical Commission) 60825-1 및 CENELEC EN 60825-1 규정을 준수하고 있 습니다.

CD-ROM 드라이브, DVD-ROM 드라이브 또는 기타 다른 레이저 장치가 설치되어 있는 경우, 다음을 주의하십시오.

주의:

본 내용에서 설명한 이외의 방법으로 드라이브를 조정하거나 제어 또는 작동하는 경우, 해로운 레이저 복사에 노출될 수 있습니다.

CD-ROM 드라이브, DVD-ROM 드라이브 또는 기타 광 저장 장치를 열면 해로운 레이저 복사에 노출될 수 있습니다. 이러한 드라이브의 내부에는 사용자가 수리할 수 있는 부품이 없습니다. **열지 마십시오.**

설치된 CD-ROM 드라이브, DVD-ROM 드라이브 또는 기타 저장 장치에는 임베디드 클래스 3A 또는 클래스 3B 레이저 다이오드가 포함되어 있을 수 있습니다. 다음을 주의하십시오.

위험

드라이브가 열리면 가시 또는 비가시 레이저 복사 에너지가 방출됩니다. 눈에 광선을 직접 쏘이지 않도록 주의하십시오. 나안 또는 광학 기구를 착용한 상태에서 광선을 직접 바라보지 않도록 하십시오.

Algunos modelos de sistemas ThinkPad están equipados de fábrica con un dispositivo de almacenamiento óptico, como una unidad de CD-ROM o de DVD-ROM. Estas unidades también se venden por separado como opciones. Si está instalada alguna de dichas unidades, se certifica que en los Estados Unidos cumple los requisitos del Department of Health and Human Services 21 Code of Federal Regulations (DHHS 21 CFR) Subchapter J para productos láser de Clase 1. En otros países, se certifica que cumple los requisitos para productos láser de Clase 1 de las normativas 60825-1 y CENELEC EN 60825-1 de International Electrotechnical Commission (IEC).

Si está instalada alguna unidad de CD-ROM, DVD-ROM u otro dispositivo láser, tenga en cuenta lo siguiente:

PRECAUCIÓN: La utilización de controles, ajustes o la realización de procedimientos diferentes a los especificados puede dar como resultado una exposición peligrosa a radiaciones.

Si abre la unidad de CD-ROM, DVD-ROM o cualquier otro dispositivo de almacenamiento óptico, podría quedar expuesto a una radiación láser peligrosa. No hay piezas que requieran servicio dentro de estas unidades. **No las abra.**

Las unidades de CD-ROM, DVD-ROM u otro dispositivo de almacenamiento instalado pueden contener un diodo láser de Clase 3A o Clase 3B incorporado. Tenga en cuenta lo siguiente:

PELIGRO

Emite radiación láser visible e invisible cuando está abierto. No fije la vista en el rayo, no lo mire directamente con instrumentos ópticos y evite la exposición directa al rayo.

部分 ThinkPad 電腦機型出廠時已裝配光學儲存裝置，例如 CD-ROM 光碟機或 DVD-ROM 光碟機。這些裝置也另以選用配備的形式出售。如果已安裝其中一台光碟機，則此光碟機已符合「美國健康與人類服務部 (Department of Health and Human Services) 」所公布的 21 Code of Federal Regulations (DHHS 21 CFR) 中 J 小節對於 Class 1 雷射產品的相關規定。在其他國家或地區，這台光碟機符合「國際電子技術委員會 (IEC) 」60825-1 及 CENELEC EN 60825-1 的 Class 1 雷射產品相關規定。

如果已安裝 CD-ROM 光碟機、 DVD-ROM 光碟機或其他雷射裝置，請注意下列聲明：

警告：
若不遵守本文規定的控制、調整或操作程序，可能會導致危險的輻射外洩。

打開 CD-ROM 光碟機、 DVD-ROM 光碟機或其他任何光學儲存裝置，可能會導致危險的輻射外洩。這些光碟機內部沒有可維修的零件。**請勿打開**。

CD-ROM 光碟機、 DVD-ROM 光碟機或其他任何已安裝的儲存裝置，可能含有內嵌式 Class 3A 或 Class 3B 雷射二極體。這類光碟機的使用者應注意下列聲明：

危險

在開啟光碟機時會發出可見的和無形的雷射輻射。請勿直視光束或以光學儀器直接觀看光束，並避免直接暴露在光束中。

Chapter 2. Important service information

This chapter presents following important service information that applies to all machine types supported by this manual:

- "Strategy for replacing FRUs" on page 25
  - "Strategy for replacing a hard disk drive" on page 26
  - "Important notice for replacing a system board" on page 26
  - "How to use error message" on page 26
- "Strategy for replacing FRUs for CTO, CMV, and GAV" on page 26
  - "Product definition" on page 26
  - "FRU identification for CTO, CMV, and GAV products" on page 27

Important: BIOS and device driver fixes are customer-installable. The BIOS and device drivers are posted on the customer support site `http://www.lenovo.com/support`.

System Disassembly/Reassembly videos that show the FRU removals or replacements for the Lenovo® authorized service technicians are available in the following support site:
http://www.lenovoservicetraining.com/ion/

Advise customers to contact the Customer Support Center at 800-426-7378 if they need assistance in obtaining or installing any software fixes, drivers, and BIOS downloads.

Customers in Canada should call the Customer Support Center at 800-565-3344 for assistance or download information.

Strategy for replacing FRUs

Before replacing parts:

Make sure that all software fixes, drivers, and BIOS downloads are installed before replacing any FRUs listed in this manual.

After a system board is replaced, ensure that the latest BIOS is loaded to the system board before completing the service action.

To download software fixes, drivers, and BIOS, do as follows:

1. Go to http://www.lenovo.com/support.
2. Enter the product number of the computer or press Auto-detect button on the screen.
3. Select **Downloads and drivers**.
4. Follow the directions on the screen and install the necessary software.

Use the following strategy to prevent unnecessary expense for replacing and servicing FRUs:

- **If you are instructed to replace a FRU but the replacement does not correct the problem, reinstall the original FRU before you continue**.
- Some computers have both a processor board and a system board. If you are instructed to replace either the processor board or the system board, and replacing one of them does not correct the problem, reinstall that board, and then replace the other one.
- If an adapter or a device consists of more than one FRU, any of the FRUs may be the cause of the error. Before replacing the adapter or device, remove the FRUs, one by one, to see if the symptoms change. Replace only the FRU that changed the symptoms.

© Copyright Lenovo 2009, 2011

Attention: The setup configuration on the computer you are servicing may have been customized. Running Automatic Configuration may alter the settings. Note the current configuration settings (using the View Configuration option); then, when service has been completed, verify that those settings remain in effect.

Strategy for replacing a hard disk drive

Always try to run a low-level format before replacing a hard disk drive. This will cause all customer data on the hard disk to be lost. Be sure that the customer has a current backup of the data before doing this task.

Attention: The drive startup sequence in the computer you are servicing may have been changed. Be extremely careful during write operations such as copying, saving, or formatting. If you select an incorrect drive, data or programs can be overwritten.

Important notice for replacing a system board

Some components mounted on a system board are very sensitive. Improper handling of a system board can cause damage to those components, and may cause a system malfunction.

Attention: When handling a system board:

- Do not drop a system board or apply any excessive force to it.
- Avoid rough handling of any kind.
- Avoid bending a system board and hard pushing to prevent cracking at each BGA (Ball Grid Array) chipset.

How to use error message

Use the error codes displayed on the screen to diagnose failures. If more than one error code is displayed, begin the diagnosis with the first error code. Whatever causes the first error code may also cause false error codes. If no error code is displayed, see whether the error symptom is listed in the Symptom-to-FRU Index for the computer you are servicing.

Strategy for replacing FRUs for CTO, CMV, and GAV

Product definition

Dynamic Configure To Order (CTO)

This provides the ability for a customer to configure an IBM® or a Lenovo solution from an eSite, and have this configuration sent to fulfillment, where it is built and shipped directly to the customer. The machine label, Product Entitlement Warehouse (PEW), eSupport, and the HMM will load these products as the 4-digit MT and 3-digit model, where model = “CTO” (Example: 1829-CTO).

Custom Model Variant (CMV)

This is a unique configuration that has been negotiated between IBM or Lenovo and the customer. A unique 4-digit MT and 3-digit model is provided to the customer to place orders (Example: 1829-W15). A CMV is a special bid offering. Therefore, it is NOT generally announced.

- The MTM portion of the machine label is the 4-digit MT and 3-digit model, where model = “CTO” (Example: 1829-CTO). The PRODUCT ID portion of the machine label is the 4-digit MT and 3-digit CMV model (Example: 1829-W15).
- The PEW record is the 4-digit MT and 3-digit model, where model = “CTO” (Example: 1829-CTO).
- eSupport will show both the CTO and CMV machine type models (Example: 1829-CTO and 1829-W15 will be found on the eSupport site.)

- The HMM will have the 4-digit MT and 3-digit CTO model only (Example: 1829-CTO). Again, CMVs are custom models and are not found in the HMM.

General Announce Variant (GAV)

This is a standard model (fixed configuration). GAVs are announced and offered to all customers. The MTM portion of the machine label is a 4-digit MT and 3-digit model, where model = a “fixed part number”, not “CTO” (Example: 1829-F1U). Also, PEW, eSupport, and the HMM will list these products under the same fixed model number.

FRU identification for CTO, CMV, and GAV products

There are three information resources to identify which FRUs are used to support CTO, CMV, and GAV products. These sources are PEW, eSupport, and the HMM.

Using PEW

- **PEW** is the primary source for identifying FRU part numbers and FRU descriptions for the key commodities for CTO, CMV and GAV products at a MT - serial number level. An example of key commodities are hard disk drives, system boards, microprocessors, Liquid Crystal Displays (LCDs), and memory.
- Remember, all CTO and CMV products are loaded in PEW under the 4-digit MT and 3-digit model, where model = “CTO” (Example: 1829-CTO). GAVs are loaded in PEW under the 4-digit MT and 3-digit model, where model = a “fixed part number”, not “CTO” (Example: 1829-F1U).
- PEW can be accessed at the following Web site:
  http://www.lenovo.com/support/site.wss/document.do?lndocid=LOOK-WARNTY
  Select Warranty lookup. Input the MT and the Serial number and the list of key commodities will be returned in the PEW record under COMPONENT INFORMATION.
- **Business Partners** using Eclaim will access PEW when performing Entitlement Lookup. Business Partners will enter Loc ID, MT and Serial, and the key commodities will be returned in the Eclaim record under SYSTEM DETAILS.
- Authorized IBM Business Partners can access Eclaim at the following Web site:
  http://wca.eclaim.com

Using eSupport

For Key Commodities (Examples - hard disk drive, system board, microprocessor, LCD, and memory)

- eSupport can be used to view the list of key commodities built in a particular machine serial (this is the same record found in PEW).
- eSupport can be accessed at the following Web site:
  http://www.lenovo.com/support
- To view the key commodities, click on PARTS INFORMATION, then PARTS LOOKUP. Type in the model type and serial number. The key commodities will be returned in the eSupport record under PARTS SHIPPED WITH YOUR SYSTEM.

For the Remaining FRUs (the complete list of FRUs at the MT Model level)

- eSupport can be used to view the complete list of FRUs for a machine type and model.
- To view the complete list of FRUs, type in the machine type and model (Example: 1829-CTO) under QUICK PATH. Under “View by Document Type” select PARTS INFORMATION. Under “Filter by Category” select SERVICE PARTS. Under “Parts Information by Date” select SYSTEM SERVICE PARTS. The list of service parts by description, with applicable machine type model and FRU will be displayed.

Using the HMM

For Key Commodities (Examples - hard disk drive, system board, microprocessor, LCD, and memory)

Use the HMM as a back-up to PEW and eSupport to view the complete list of FRUs at the MT Model level.

Chapter 3. General checkout

This chapter presents following information:

- "What to do first" on page 29
- "Checkout guide" on page 30
  - "Diagnostics using PC-Doctor for DOS" on page 30
  - "Lenovo ThinkVantage Toolbox (Lenovo System Toolbox)" on page 33
  - "PC-Doctor for Rescue and Recovery" on page 33
  - "FRU tests" on page 33
- "Power system checkout" on page 34

The descriptions in this chapter apply to any ThinkPad model that supports the PC-Doctor® for DOS diagnostics program. Some descriptions might not apply to your particular computer.

Before you go to the checkout guide, be sure to read the following important notes.

Important:

- **Only certified trained personnel should service the computer.**
- **Before replacing any FRU, read the entire page on removing and replacing FRUs.**
- **When you replace FRUs, use new nylon-coated screws.**
- **Be extremely careful during such write operations as copying, saving, or formatting.** Drives in the computer that you are servicing sequence might have been altered. If you select an incorrect drive, data or programs might be overwritten.
- **Replace a FRU only with another FRU of the correct model.** When you replace a FRU, make sure that the model of the machine and the FRU part number are correct by referring to the FRU parts list.
- **A FRU should not be replaced because of a single, unreproducible failure.** Single failures can occur for a variety of reasons that have nothing to do with a hardware defect, such as cosmic radiation, electrostatic discharge, or software errors. Consider replacing a FRU only when a problem recurs. If you suspect that a FRU is defective, clear the error log and run the test again. If the error does not recur, do not replace the FRU.
- **Be careful not to replace a nondefective FRU.**

What to do first

When you do return a FRU, you must include the following information in the parts exchange form or parts return form that you attach to it:

1. Name and phone number of service technician
2. Date of service
3. Date on which the machine failed
4. Date of purchase
5. Failure symptoms, error codes appearing on the display, and beep symptoms
6. Procedure index and page number in which the failing FRU was detected
7. Failing FRU name and part number
8. Machine type, model number, and serial number
9. Customer's name and address

Note for warranty: During the warranty period, the customer may be responsible for repair costs if the computer damage was caused by misuse, accident, modification, unsuitable physical or operating environment, or improper maintenance by the customer. Following is a list of some common items that are not covered under warranty and some symptoms that might indicate that the system was subjected to stress beyond normal use.

© Copyright Lenovo 2009, 2011

Before checking problems with the computer, determine whether the damage is covered under the warranty by referring to the following list:

The following are not covered under warranty:
- LCD panel cracked from the application of excessive force or from being dropped
- Scratched (cosmetic) parts
- Distortion, deformation, or discoloration of the cosmetic parts
- Plastic parts, latches, pins, or connectors that have been cracked or broken by excessive force
- Damage caused by liquid spilled into the system
- Damage caused by the improper insertion of a PC Card or the installation of an incompatible card
- Improper disc insertion or use of an optical drive
- Diskette drive damage caused by pressure on the diskette drive cover, foreign material in the drive, or the insertion of a diskette with multiple labels
- Damaged or bent diskette eject button
- Fuses blown by attachment of a nonsupported device
- Forgotten computer password (making the computer unusable)
- Sticky keys caused by spilling a liquid onto the keyboard
- Use of an incorrect ac power adapter on laptop products

The following symptoms might indicate damage caused by nonwarranted activities:
- Missing parts might be a symptom of unauthorized service or modification.
- If the spindle of a hard disk drive becomes noisy, it may have been subjected to excessive force, or dropped.

Checkout guide

Use the following procedures as a guide in identifying and correcting problems with the ThinkPad Notebook.

Note: The diagnostic tests are intended to test only ThinkPad products. The use of non-ThinkPad products, prototype cards, or modified options can lead to false indications of errors and invalid system responses.

1. Identify the failing symptoms in as much detail as possible.
2. Verify the symptoms. Try to re-create the failure by running the diagnostic test or by repeating the operation.

Diagnostics using PC-Doctor for DOS

The ThinkPad Notebook has a test program called PC-Doctor for DOS (hereafter called *PC-Doctor*.) You can detect errors by running the diagnostics test included in PC-Doctor.

Note: PC-Doctor for DOS is available at the Web site http://www.lenovo.com/support. To create the PC-Doctor diagnostic CD, follow the instructions on the Web site.

For some possible configurations of the computer, PC-Doctor might not run correctly. To avoid this problem, you need to initialize the computer setup by use of the BIOS Setup Utility before you run PC-Doctor.

To enter BIOS Setup Utility, do as follows:

1. Turn on the computer.
2. When the ThinkPad logo comes up, immediately press F1 to enter the BIOS Setup Utility.

Note: If a supervisor password has been set by the customer, BIOS Setup Utility menu appears after the password is entered. You can start the utility by pressing Enter instead of entering the supervisor password; however, you cannot change the parameters that are protected by the supervisor password.

On the BIOS Setup Utility screen, press F9, Enter, F10, and then Enter.

Note: When you initialize the computer configuration, some devices are disabled, such as the serial port. If you test one of these devices, you will need to enable it by using Configuration utility for DOS. The utility is available on the following Web site:
http://www.lenovo.com/support

PC-Doctor cannot be used to test a device that is in the docking station, even if the computer supports the docking station. To test a USB device, connect it to the USB connector of the computer.

Testing the computer

Note: The PC-Doctor diagnostic CD does not support any optical drives connected through USB devices or any others. It supports only the internal optical drive of the ThinkPad Notebook.

To run the test, do as follows:

1. Turn off the computer.
2. Make sure that the internal optical drive that is supported as a startup device is attached to the computer you are servicing.
3. Turn on the computer. If the computer cannot be powered on, go to “Power system checkout” on page 34, and check the power sources.

   If an error code appears, go to “Symptom-to-FRU index” on page 44.
4. When the ThinkPad logo comes up, immediately press F12 to enter the Boot Menu.
5. Insert the PC-Doctor CD into the internal optical drive.
6. Press cursor keys to select **ATAPI CDx** (x: 0, 1, ...) and then press Enter.
7. Follow the instructions on the screen.
8. The main panel of PC-Doctor appears.
9. Select **Diagnostics** with the arrow keys, and press Enter.

   Note: You can select an item not only with the arrow keys, but also with the TrackPoint® pointer. Instead of pressing Enter, click the left button.

   A pull-down menu appears. (Its exact form depends on the model.)

   Note: PC-Doctor menu does not mean the formal support device list. Some unsupported device names may appear in the PC-Doctor menu.

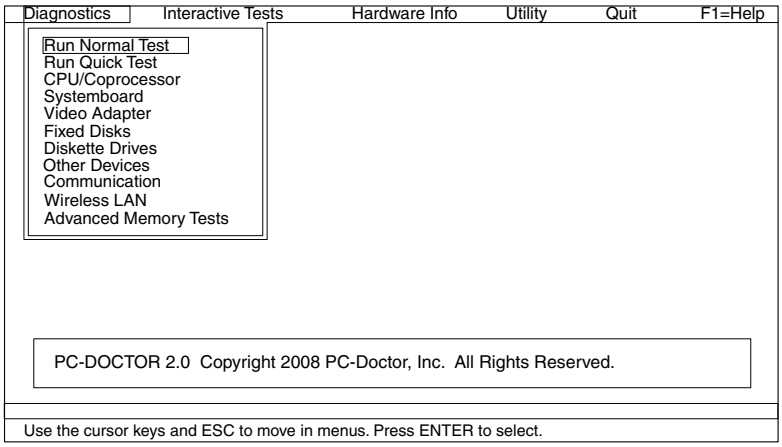

   The options on the test menu are as follows:

Diagnostics	Interactive Tests
• Run Normal Test • Run Quick Test • CPU/Coprocessor • System board • Video Adapter • Serial Ports • Fixed Disks • Diskette Drives • Other Devices • Wireless LAN • Advanced Memory Tests	• Keyboard • Video • Internal Speaker • Mouse • Diskette • System Load • Optical Drive Test • Intel WLAN Radio Test
Note: • In the **Keyboard** test in **Interactive Tests**, the Fn key should be held down for at least 2 seconds; otherwise, it cannot be sensed. • **Video Adapter** test supports only the LCD display on the ThinkPad Notebook. If you have an external monitor attached to the computer, detach it before running PC-Doctor for DOS. • To test **Digital Signature Chip**, the security chip must be set to Active.	

10. Run the applicable function test.
11. Follow the instructions on the screen. If there is a problem, PC-Doctor shows messages describing it.
12. To exit the test, select **Quit → Exit Diag**. To cancel the test, press Esc.

Note: After running PC-Doctor, check the time and date on the system and reset them if they are incorrect.

Detecting system information with PC-Doctor

PC-Doctor can detect the following system information:

Hardware Info

- System Configuration
- Memory Contents
- Physical Disk Drives
- Logical Disk Drives
- VGA Information
- IDE Drive Info
- PCI Information
- PNPISA Info
- SMBIOS Info
- VESA LCD Info
- Hardware Events Log

Utility

- Run External Tests
- Surface Scan Hard Disk
- Benchmark System
- DOS Shell
- Tech Support Form
- Battery Rundown
- View Test Log
- Print Log
- Save Log
- Full Erase Hard Drive

- Quick Erase Hard Drive

Lenovo ThinkVantage Toolbox (Lenovo System Toolbox)

Lenovo ThinkVantage® Toolbox (Lenovo System Toolbox in Windows Vista® and Windows® XP) is a diagnostic program that works through the Windows operating system. It enables you to view symptoms of computer problems and solutions for them, and includes automatic notification when action is required, computing assistance, advanced diagnostics, and diagnostic history.

Note: Note: The latest Lenovo ThinkVantage Toolbox (Lenovo System Toolbox) is available at the Web site http://web.lenovothinkvantagetoolbox.com/. To install the latest Lenovo ThinkVantage Toolbox (Lenovo System Toolbox) on the computer, follow the instructions on the Web site.

To run this program, do as follows:

Windows 7:

While the Windows operating system is running, press the ThinkVantage button.

You can also run this program as either of the following:

- Click **Start → All Programs → Lenovo ThinkVantage Tools → System Health and Diagnostics**.
- Click **Start → Control Panel → System and Security → Lenovo's System Health and Diagnostics**.

Windows Vista and Windows XP:

Click **Start → All Programs → Lenovo Services → Lenovo System Toolbox**.

Follow the instructions on the screen. Lenovo ThinkVantage Toolbox (Lenovo System Toolbox) also has problem determination aids that determine software and usage problems.

For additional information about this program, see the Help for the program.

PC-Doctor for Rescue and Recovery

In some models of ThinkPad Notebook, the Rescue and Recovery® workspace enables you to run the PC-Doctor program to test the hardware features of the computer.

To run the test, click “Run Diagnostics” on the Rescue and Recovery main screen.

FRU tests

The following table shows the test for each FRU.

Table 1. FRU tests

FRU	Applicable test
System board	1. **Diagnostics → CPU/Coprocessor** 2. **Diagnostics → Systemboard** 3. If the docking station or the port replicator is attached to the ThinkPad computer, detach it. 4. Place the computer on a horizontal surface, and run **Diagnostics → ThinkPad Devices → HDD Active Protection Test**. **Note:** Do *not* apply any physical shock to the computer while the test is running.
Power	**Diagnostics → ThinkPad Devices → AC Adapter, Battery 1 or Battery2**

Table 1. FRU tests (continued)

FRU	Applicable test
LCD unit	1. **Diagnostics → Video Adapter** 2. **Interactive Tests → Video**
Audio	Enter the BIOS Setup Utility and change Serial ATA (SATA) setting to **→ Compatibility**, and run **Diagnostics → Other Device → Codec Test**
Speaker	**Interactive Tests → Internal Speaker** **Note:** Once Audio test is done, the no sound is heard this test. In this case, turn off and turn on the computer. Then, run this test again.
Keyboard	1. **Diagnostics → Systemboard → Keyboard** 2. **Interactive Tests → Keyboard**
Hard disk drive	Enter the BIOS Setup Utility and change Serial ATA (SATA) setting to **Compatibility**, and run **Diagnostics → Fixed Disks**
	You can also diagnose the drive without starting up the operating system. To diagnose the drive from the BIOS Setup Utility, do as follows: 1. Remove any diskette from the diskette drive, and then turn off the computer. 2. Turn on the computer. 3. While the message, "To interrupt normal startup, press the blue ThinkVangate button," is displayed at the lower left of the screen, press F1 to enter the BIOS Setup Utility. 4. Using cursor keys, select **HDD diagnostic program**. Press enter. 5. Using cursor keys, select **Main hard disk drive** or **Ultrabay hard disk drive**. 6. Press Enter to start the diagnostic program.
Diskette drive	1. **Diagnostics → Diskette Drives** 2. **Interactive Tests → Diskette**
Optical drive	1. **Diagnostics → Other Devices → Optical Drive** 2. **Interactive Tests → Optical Drive Test**
Memory	1. If two DIMMs are installed, remove one of them and run **Diagnostics → Advanced Memory Tests**. 2. If the problem does not recur, return the DIMM to its place, remove the other one, and run the test again.
TrackPoint or pointing device	If the TrackPoint does not work, check the configuration as specified in the BIOS Setup Utility. If the TrackPoint is disabled, select **Automatic** to enable it. After you use the TrackPoint, the pointer may drift on the screen for a short time. This drift can occur when a slight, steady pressure is applied to the TrackPoint pointer. This symptom is not a hardware problem. If the pointer stops after a short time, no service action is necessary. If enabling the TrackPoint does not correct the problem, continue with the following: • **Interactive Tests → Mouse**
Touch Pad	If the Touch Pad does not work, check the configuration as specified in the BIOS Setup Utility. If the Touch Pad is disabled, select **Automatic** to enable it. If enabling the Touch Pad does not correct the problem, continue with the following: • **Interactive Tests → Mouse**

Power system checkout

To verify a symptom, do the following:
1. Turn off the computer.
2. Remove the battery pack.
3. Connect the ac power adapter.
4. Check that power is supplied when you turn on the computer.

5. Turn off the computer.
6. Disconnect the ac power adapter and install the charged battery pack.
7. Check that the battery pack supplies power when you turn on the computer.

If you suspect a power problem, see the appropriate one of the following power supply checkouts:
- “Checking the ac power adapter” on page 35
- “Checking operational charging” on page 35
- “Checking the battery pack” on page 36
- “Checking the backup battery” on page 36

Checking the ac power adapter

You are here because the computer fails only when the ac power adapter is used.

- If the power problem occurs only when the docking station or the port replicator is used, replace the docking station or the port replicator.
- If the power-on indicator does not turn on, check the power cord of the ac power adapter for correct continuity and installation.
- If the computer does not charge during operation, go to “Checking operational charging” on page 35

To check the ac power adapter, do the following:
1. Unplug the ac power adapter cable from the computer.
2. Measure the output voltage at the plug of the ac power adapter cable. See the following figure:

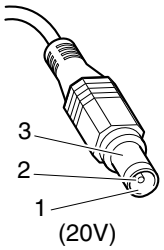

Pin	Voltage (V dc)
1	+20
2	0
3	Ground

Note: Output voltage of pin no.2 of the ac power adapter may different from the one you are servicing.
3. If the voltage is not correct, replace the ac power adapter.
4. If the voltage is acceptable, do the following:
   - Replace the system board.
   - If the problem persists, go to “FRU tests” on page 33.

Note: Noise from the ac power adapter does not always indicate a defect.

Checking operational charging

To check whether the battery charges properly during operation, use a discharged battery pack or a battery pack that has less than 50% of the total power remaining when installed in the computer.

Perform operational charging. If the battery status indicator or icon does not turn on, remove the battery pack and let it return to room temperature. Reinstall the battery pack. If the charge indicator or icon still does not turn on, replace the battery pack.

If the charge indicator still does not turn on, replace the system board. Then reinstall the battery pack. If it is still not charged, go to the next section.

Checking the battery pack

Battery charging does not start until the Power Manager Battery Gauge shows that less than 96% of the total power remains; under this condition the battery pack can charge to 100% of its capacity. This protects the battery pack from being overcharged or from having a shortened life.

To check your battery, move your cursor to the Power Manager Battery Gauge icon in the icon tray of the Windows taskbar and wait for a moment (but do *not* click), and the percentage of battery power remaining is displayed. To get detailed information about the battery, double-click the Power Manager Battery Gauge icon.

Note: If the battery pack becomes hot, it may not be able to charge. Remove it from the computer and leave it at room temperature for a while. After it cools down, reinstall and recharge it.

To check the battery pack, do the following:

1. Power off the computer.
2. Remove the battery pack and measure the voltage between battery terminals 1 (+) and 7 (-). See the following figure:

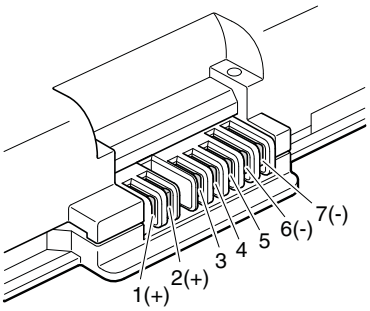

Terminal	Voltage (V dc)
1	+ 0 to + 12.6
7	Ground (-)

3. If the voltage is less than +11.0 V dc, the battery pack has been discharged.

   Note: Recharging will take at least 3 hours, even if the indicator does not turn on.

   If the voltage is still less than +11.0 V dc after recharging, replace the battery.
4. If the voltage is more than +11.0 V dc, measure the resistance between battery terminals 5 and 7. The resistance must be 4 to 30 K Ω. If the resistance is not correct, replace the battery pack. If the resistance is correct, replace the system board.

Checking the backup battery

Do the following:

1. Power off the computer, and unplug the ac power adapter from it.
2. Turn the computer upside down.
3. Remove the battery pack (see “1010 Battery pack” on page 59).
4. Remove the backup battery (see “1130 Backup battery” on page 79).
5. Measure the voltage of the backup battery. See the following figure.

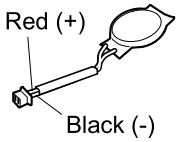

Wire	Voltage (V dc)
Red	+2.5 to +3.2
Black	Ground

- If the voltage is correct, replace the system board.
- If the voltage is not correct, replace the backup battery.
- If the backup battery discharges quickly after replacement, replace the system board.

Chapter 4. Related service information

This chapter presents following information:

- "Restoring the factory contents by using Recovery Disc Set" on page 39
- "Passwords" on page 40
- "Power management" on page 42
- "Symptom-to-FRU index" on page 44

Service Web site:

When the latest maintenance diskette and the system program service diskette become available, they will be posted on http://www.lenovo.com/spm.

Restoring the factory contents by using Recovery Disc Set

When the hard disk drive is replaced because of a failure, no product recovery program is on the new hard disk. In this case, you must use the Recovery Disc Set for the computer. Order the Recovery Disc Set and the hard disk drive at the same time so that you can recover the new hard disk drive with the pre-installed software when they arrive. For information on which discs to order, see "Recovery discs" on page 257.

The recovery disc set consists of the user instructions and the following set of DVDs to restore the computer to the original factory configuration.

***Operating System Recovery Disc* (one disc)**

This disc restores the Microsoft® Windows operating system. Use this disc to start the recovery process.

***Applications and Drivers Recovery Disc* (one or more discs)**

This disc restores the preinstalled applications and drivers on the computer.

Supplemental Recovery Disc

This disc contains additional content, such as updates to the software that was preinstalled on the computer. Not all recovery disc sets come with a *Supplemental Recovery Disc*.

Notes:

- You must have a DVD drive to use the recovery discs. If you do not have an internal DVD drive, you can use an external USB DVD drive.
- During the recovery process, all data on the hard disk drive will be deleted. If possible, copy any important data or personal files that you want to keep onto removable media or a network drive before you start the recovery process.

To restore the computer to the original factory configuration using the recovery disc set, do the following:

Note: Recovery takes several hours. The length of time depends on the method you use. If you use recovery discs, recovery takes at least five hours.

1. Make the CD/DVD drive the first startup device in the startup sequence using the following procedure:
   a. Press and hold down the F1 key, and then turn on the computer. When the logo screen is displayed or if you hear repeating beeps, release the F1 key. The Setup Utility program opens.
   b. Use the arrow keys to select **Startup → Boot**.
   c. Select the CD/DVD drive as the **1st Boot Device**.
2. Insert the *Operating System Recovery Disc* into the DVD drive.

© Copyright Lenovo 2009, 2011

3. Press F10 to save the Setup Utility configuration changes. Follow the instructions on the screen to begin the recovery process.
4. Select your language and click **Next**.
5. Read the license. If you agree with the terms and conditions, select **I accept these terms and conditions** and then click **Next**. If you do not agree with the terms and conditions, follow the instructions on the screen.
6. Click **Yes** in the displayed window to begin the operating system recovery process.
7. Insert the *Applications and Drivers Recovery Disc* when prompted and then click **OK** to begin the applications and drivers recovery process.
8. If you have a *Supplemental Recovery Disc*, insert it when prompted and click **Yes**. If you do not have a *Supplemental Recovery Disc*, click **No**.
9. When all of the data has been copied from the last disc in the set and has been processed, remove the disc and restart the computer.

   Note: The rest of the recovery process is fully automated and no action is required by you. The computer will restart into the Microsoft Windows desktop several times and you might experience periods when no activity is apparent on the screen for several minutes at a time. This is normal.
10. When the recovery process is complete, the Set Up Windows screen is displayed. Follow the instructions on the screen to complete the Windows setup.
11. After you have completed the Windows setup, you might want to restore the original startup sequence. Start the Setup Utility program and then press F9 to restore the default settings. Press F10 to save and exit the Setup Utility.

Note: After restoring a hard disk drive to the factory default settings, you might need to reinstall some device drivers.

Passwords

As many as three passwords may be needed for any ThinkPad Notebook: the power-on password (POP), the hard-disk password (HDP), and the supervisor password (SVP).

If any of these passwords has been set, a prompt for it appears on the screen whenever the computer is turned on. The computer does not start until the password is entered.

Exception: If only an SVP is installed, the password prompt does not appear when the operating system is booted.

Power-on password

A power-on password (POP) protects the system from being powered on by an unauthorized person. The password must be entered before an operating system can be booted. For how to remove the POP, see “How to remove the power-on password” on page 41.

Hard-disk password

There are two hard-disk passwords (HDPs):

- User HDP—for the user
- Master HDP—for the system administrator, who can use it to get access to the hard disk even if the user has changed the user HDP

Note: There are two modes for the HDP: **User only** and **Master + User**. The **Master + User** mode requires two HDPs; the system administrator enters both in the same operation. The system administrator then provides the user HDP to the system user.

Attention: If the user HDP has been forgotten, check whether a master HDP has been set. If it has, it can be used for access to the hard disk drive. If no master HDP is available, neither Lenovo nor Lenovo authorized service technicians provide any services to reset either the user or the master HDP, or to recover data from the hard disk drive. The hard disk drive can be replaced for a scheduled fee.

For how to remove the POP, see “How to remove the hard-disk password” on page 41.

Supervisor password

A supervisor password (SVP) protects the system information stored in the BIOS Setup Utility. The user must enter the SVP in order to get access to the BIOS Setup Utility and change the system configuration.

Attention: If the SVP has been forgotten and cannot be made available to the service technician, there is no service procedure to reset the password. The system board must be replaced for a scheduled fee.

How to remove the power-on password

To remove a POP that you have forgotten, do the following:

(A) If no SVP has been set:

1. Turn off the computer.
2. Remove the battery pack. For how to remove the battery pack, see “1010 Battery pack” on page 59.
3. Remove the backup battery. For how to remove the backup battery, see “1130 Backup battery” on page 79.
4. Turn on the computer and wait until the POST ends. After the POST ends, the password prompt does not appear. The POP has been removed.
5. Reinstall the backup battery and the battery pack.

(B) If an SVP has been set and is known by the service technician:

1. Turn on the computer.
2. When the ThinkPad logo comes up, immediately press F1 to enter BIOS Setup Utility.For models supporting the Passphrase function, press F1 while the POP icon is appearing on the screen; then enter the POP. For the other models, enter the POP.

   Note: To check whether the ThinkPad Notebook you are servicing supports the Passphrase function, enter the BIOS Setup Utility and go to **Security → Password**. If the **Using Passphrase** item is displayed in the menu, this function is available on the ThinkPad Notebook.
3. Select **Security**, using the cursor directional keys to move down the menu.
4. Select **Password**.
5. Select **Power-On Password**.
6. Type the current SVP in the **Enter Current Password** field. then leave the **Enter New Password** field blank, and press Enter twice.
7. In the Changes have been saved window, press Enter.
8. Press F10; then, in the Setup confirmation window, select **Yes**.

How to remove the hard-disk password

Attention: If **User only** mode is selected and the user HDP has been forgotten and cannot be made available to the service technician, neither Lenovo nor Lenovo authorized service technicians provide any services to reset the user HDPs or to recover data from the hard disk drive. The hard disk drive can be replaced for a scheduled fee.

To remove a user HDP that has been forgotten, when the SVP and the master HDP are known, do the following:

1. Turn on the computer.
2. When the ThinkPad logo comes up, immediately press F1 to enter BIOS Setup Utility.For models supporting the Passphrase function, press F1 while HDP icon is appearing on the screen; then enter the master HDP. For the other models, enter the master HDP.

   Note: To check whether the ThinkPad Notebook you are servicing supports the Passphrase function, enter the BIOS Setup Utility and go to **Security** --> **Password**. If **Using Passphrase** item is displayed in the menu, this function is available on the ThinkPad Notebook.
3. Select **Security**, using the cursor directional keys to move down the menu.
4. Select **Password**.
5. Select **Hard-disk *x* password**, where *x* is the letter of the hard disk drive. A pop-up window opens.
6. Select **Master HDP**.
7. Type the current master HDP in the **Enter Current Password** field. then leave the **Enter New Password** field blank, and press Enter twice.
8. Press F10.
9. Select **Yes** in the Setup Configuration window. Both user HDP and master HDP will have been removed.

Power management

To reduce power consumption, the computer has three power management modes: screen blank, sleep (standby in Windows XP), and hibernation.

Screen blank mode

If the time set on the “Turn off monitor” timer in the operating system expires, the LCD backlight turns off.

To put the computer into screen blank mode, do as follows:

1. Press Fn+F3. A panel for selecting a power plan (in Windows XP, power scheme) appears.
2. Select **Power off display (keep current power plan)** (in Windows XP, **keep current power scheme**).

You can also put the computer into screen blank mode, press ThinkVantage button and use the ThinkVantage Productivity Center.

Note: If the computer is a Windows 7 model, it does not support ThinkVantage Productivity Center.

To end screen blank mode and resume normal operation, press any key.

Sleep (standby) mode

When the computer enters sleep (standby) mode, the following events occur in addition to what occurs in screen blank mode:

- The LCD is powered off.
- The hard disk drive is powered off.
- The CPU stops.

To enter sleep (standby) mode, press Fn+F4.

Note: You can change the action of the Fn+F4 key combination by changing the settings in Power Manager.

In certain circumstances, the computer goes into sleep (standby) mode automatically:

- If a “suspend time” has been set on the timer, and the user does not do any operation with the keyboard, the TrackPoint, the hard disk, the parallel connector, or the diskette drive within that time.
- If the battery indicator blinks orange, indicating that the battery power is low.

Note: Even if you do not set the low-battery alarm, the charge indicator notifies you when the battery is low, and then the computer enters the power-saving mode automatically.

To cause the computer to return from sleep (standby) mode and resume operation, do one of the following:
- Press the Fn key.
- Open the LCD cover.
- Turn on the power switch.

Also, in either of the following events, the computer automatically returns from sleep (standby) mode and resumes operation:

- The ring indicator (RI) is signaled by a serial device or a PC Card device. *(does not support the ring indicator (RI) resume by PC Card device.)*
- The time set on the resume timer elapses.

  Note: The computer does not accept any input immediately after it enters sleep (standby) mode. Wait a few seconds before taking any action to reenter operation mode.

Hibernation mode

In hibernation mode, the following occurs:

- The system status, RAM, VRAM, and setup data are stored on the hard disk.
- The system is powered off.

Note: If the computer enters the hibernation mode while it is docked to the ThinkPad Advanced Dock or ThinkPad Advanced Dock, do not undock it before resuming normal operation. If you do undock it and then try to resume normal operation, you will get an error message, and you will have to restart the system.

To cause the computer to enter hibernation mode, do any of the following:

- Press the Fn+F12 keys.
- If you are using the APM operating system and have set the mode to **Power switch mode [Hibernation]**, turn off the power switch.
- If you are using the ACPI operating system and have defined one of the following actions as the event that causes the system to go into hibernation mode, perform that action.
  - Closing the lid.
  - Pressing the power button.
  - Pressing Fn+F4 keys.

Also, the computer goes into hibernation mode automatically in either of the following conditions:

- If a “hibernation time” has been set on the timer, and if the user does not do any operation with the keyboard, the TrackPoint, the hard disk drive, the parallel connector, or the diskette drive within that time.
- If the timer conditions are satisfied in suspend mode.
- If you are using the APM operating system and have set the mode to **Hibernate when battery becomes low**, and the battery charge becomes critically low.

When the power is turned on, the computer returns from hibernation mode and resumes operation. The hibernation file in the boot record on the hard disk drive is read, and system status is restored from the hard disk drive.

Symptom-to-FRU index

This section contains following information:

- "Numeric error codes" on page 44
- "Error messages" on page 46
- "No-beep symptoms" on page 46
- "LCD-related symptoms" on page 47
- "Intermittent problems" on page 47
- "Undetermined problems" on page 48

The symptom-to-FRU index in this section lists symptoms and errors and their possible causes. The most likely cause is listed first, in boldface type.

Note: Do the FRU replacement or other actions in the sequence shown in the column headed "FRU or action, in sequence." If replacing a FRU does not solve the problem, put the original part back in the computer. Do not replace a nondefective FRU.

This index can also help you determine, during regular servicing, what FRUs are likely to need to be replaced next.

A numeric error is displayed for each error detected in POST or system operation. In the displays, **n** can be any number.

If no numeric code is displayed, check the narrative descriptions of symptoms. If the symptom is not described there, go to "Intermittent problems" on page 47.

Note: For a device not supported by diagnostic codes in the ThinkPad Notebooks, see the manual for that device.

Numeric error codes

Table 2. Numeric error codes

Symptom or error (beeps, if any)	FRU or action, in sequence
0187 EAIA data access error—The access to EEPROM is failed. (two short beeps)	**System board.**
0189 Invalid RFID configuration information area—The EEPROM checksum is not correct. (two short beeps)	**System board.**
0190 Critical low-battery error (two short beeps)	1. **Charge the battery pack.** 2. Battery pack.
0191 System Security—Invalid Remote Change requested.	1. **Run BIOS Setup Utility, and then save current setting by pressing F10.** 2. System board.
0210 Stuck Key (two short beeps)	**Change keyboard, and restart the computer.**
0211 Keyboard error (two short beeps)	**Run interactive tests of the keyboard and the auxiliary input device.**

Table 2. Numeric error codes (continued)

Symptom or error (beeps, if any)	FRU or action, in sequence
0230 Shadow RAM error—Shadow RAM fails at offset nnnn. (two short beeps)	**System board.**
0231 System RAM error—System RAM fails at offset nnnn. (two short beeps)	1. **DIMM.** 2. System board.
0232 Extended RAM error— Extended RAM fails at offset nnnn. (two short beeps)	1. **DIMM.** 2. System board.
0250 System battery error—System battery is dead. (two short beeps)	1. **Charge the backup battery for more than 8 hours by connecting the ac power adapter.** 2. Replace the backup battery and run BIOS Setup Utility to reset the time and date.
0251 System CMOS checksum bad— Default configuration used. (two short beeps)	1. **Charge the backup battery for more than 8 hours by connecting the ac power adapter.** 2. Replace the backup battery and run BIOS Setup Utility to reset the time and date.
0254 System NV7 Volume checksum bad- Default configuration used (two short beeps)	**Turn off the computer and discharge CMOS. Then restart the computer.**
0260 System timer error. (two short beeps)	1. **Charge the backup battery for more than 8 hours by connecting the ac power adapter.** 2. Replace the backup battery and run BIOS Setup Utility to reset the time and date. 3. System board.
0270 Real-time clock error. (two short beeps)	1. **Charge the backup battery for more than 8 hours by connecting the ac power adapter.** 2. Replace the backup battery and run BIOS Setup Utility to reset the time and date. 3. System board.
0271 Date and time error—Neither the date nor the time is set in the computer. (two short beeps)	**Run BIOS Setup Utility to reset the time and date.**
0280 Previous boot incomplete— Default configuration used. (two short beeps)	1. **Load “Setup Default” in BIOS Setup Utility.** 2. DIMM. 3. System board.
02D0 System cache error. (two short beeps)	1. **CPU.** 2. System board.
02F0 CPU ID:xx Failed.	1. **CPU.** 2. System board.
02F5 DMA test failed. (two short beeps)	1. **DIMM.** 2. System board.
02F6 Software NMI failed (two short beeps)	1. **DIMM.** 2. System board.

Table 2. Numeric error codes (continued)

Symptom or error (beeps, if any)	FRU or action, in sequence
02F7 Fail-safe timer NMI failed (two short beeps)	1. **DIMM.** 2. System board.
1802 Unauthorized network card is plugged in—Turn off and remove the miniPCI network card. (two short beeps)	1. **Remove Mini PCI network card.** 2. System board.

Error messages

Table 3. Error messages

Symptom or error (beeps, if any)	FRU or action, in sequence
Bad CRC2. Enter BIOS Setup Utility, and load Setup defaults. (two short beeps)	**Press F1 to enter BIOS Setup Utility. Press F9, and Enter to load the default setting. Then save the current setting by pressing F10, and restart the computer.**
Fan error. (four short beeps, one long beep)	1. **Fan**. 2. Thermal grease. 3. System board.
DRAM is unplugged. (four short beeps, pause, three short beeps, pause, one short beep, pause, one short beep)	**Install the DRAM.**
DRAM is not well plugged. (seven short beeps, one long beep, four short beeps, one long beep, one short beep, one long beep, one short beep, one long beep till forever.)	**Reinstall the DRAM.**
Operating system not found.	1. **Check that the operating system has no failure and is installed correctly.** 2. Enter BIOS Setup Utility and see whether the hard disk drive is properly identified. If you still see the same error message, check the boot sequence. 3. Reinstall the hard disk drive. 4. Reinstall the operating system.
Unauthorized WAN card is plugged in Power off and remove the WAN card.	**Turn off the computer and remove the WAN card.**
System Configuration Data Read Error (two short beeps)	**Press F1 to enter BIOS Setup Utility. Press F9, and Enter to load the default setting. Then save the current setting by pressing F10, and restart the computer.**

No-beep symptoms

Table 4. No-beep symptoms

Symptom or error	FRU or action, in sequence
No beep, power-on indicator on, LCD blank, and no POST.	1. **Make sure that every connector is connected tightly and correctly**. 2. DIMM. 3. System board.
No beep, power-on indicator on, and LCD blank during POST.	1. **Reseat DIMM**. 2. System board.

Table 4. No-beep symptoms (continued)

Symptom or error	FRU or action, in sequence
The power-on password prompt appears.	A power-on password or a supervisor password is set. Type the password and press **Enter**.
The hard-disk password prompt appears.	A hard-disk password is set. Type the password and press **Enter**.

LCD-related symptoms

Important: The TFT LCD for the notebook computer contains many thin-film transistors (TFTs). The presence of a small number of dots that are missing, discolored, or always lighted is characteristic of TFT LCD technology, but excessive pixel problems can cause viewing concerns.

If the LCD you are servicing has two or less visible defective pixels, it should not be considered faulty. However, if the LCD has three or more visible defective pixels, it will be deemed as defective by Lenovo and it should be replaced.

Note:

- This policy applies to all ThinkPad Notebooks purchased on 1 January, 2008 or later.
- Lenovo will not provide replacement if the LCD is within specification as we cannot guarantee that any replacement LCD will have zero pixel defects.
- One pixel consists of R, G, B sub-pixels.

Table 5. LCD-related symptoms

Symptom or error	FRU or action, in sequence
No beep, power-on indicator on, and a blank LCD during POST.	**System board**.
• LCD backlight not working. • LCD too dark. • LCD brightness cannot be adjusted. • LCD contrast cannot be adjusted.	1. **Reseat the LCD connectors**. 2. LCD assembly. 3. System board.
• LCD screen unreadable. • Characters missing pixels. • Screen abnormal. • Wrong color displayed.	1. **See important note for "LCD-related symptoms."** 2. Reseat all LCD connectors. 3. LCD assembly. 4. System board.
Horizontal or vertical lines displayed on LCD.	**LCD assembly**.

Intermittent problems

Intermittent system hang problems can be due to a variety of causes that have nothing to do with a hardware defect, such as cosmic radiation, electrostatic discharge, or software errors. FRU replacement should be considered only when a problem recurs.

When analyzing an intermittent problem, do the following:

1. Run the diagnostic test for the system board in loop mode **at least 10 times**.
2. If no error is detected, do **not** replace any FRUs.
3. If any error is detected, replace the FRU shown by the FRU code. Rerun the test to verify that no more errors exist.

Undetermined problems

If the diagnostic tests did not identify the adapter or device that has failed, if wrong devices are installed, or if the system simply is not operating, follow these procedures to isolate the failing FRU (do not isolate FRUs that have no defects).

Verify that all attached devices are supported by the computer.

Verify that the power supply being used at the time of the failure is operating correctly. (See “Power system checkout” on page 34.)

1. Turn off the computer.
2. Visually check each FRU for damage. Replace any damaged FRU.
3. Remove or disconnect all of the following devices:
   a. Non-ThinkPad devices
   b. Devices attached to the docking station or the port replicator
   c. Printer, mouse, and other external devices
   d. Battery pack
   e. Hard disk drive
   f. External diskette drive or optical drive
   g. DIMM
   h. Optical disk or diskette in the internal drive
   i. PC Cards
4. Turn on the computer.
5. Determine whether the problem has been solved.
6. If the problem does not recur, reconnect the removed devices one at a time until you find the failing FRU.
7. If the problem remains, replace the following FRUs one at a time (do not replace a nondefective FRU):
   a. System board
   b. LCD assembly

Chapter 5. Status indicators

This chapter presents the system status indicators that show the status of the computer.

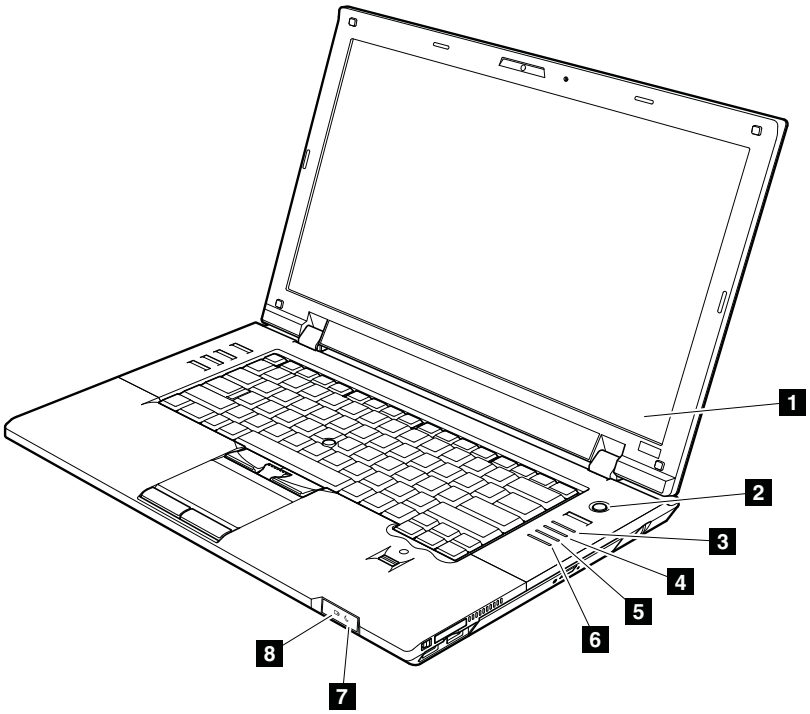

Table 6. Status indicators

Indicator	Meaning	
1 Numeric lock	By default, when the numeric lock is on, the indicator is displayed on the screen.	
2 Power on	Green:	The computer is on and ready to use. The power switch stays lit whenever the computer is on and is not lit when the computer is in sleep (standby) mode.
3 Wireless LAN/WAN/WiMAX status	Green:	The wireless feature (802.11 standard or 802.11n) is on, and the radio link is ready for use.
	Blinking green:	Data is being transmitted.
4 *Bluetooth* wireless status	Green:	*Bluetooth* wireless is on, and the radio link is ready for use.
	Blinking green:	Data is being transmitted.

© Copyright Lenovo 2009, 2011

Table 6. Status indicators (continued)

Indicator	Meaning
5 Device access	Data is being read from or written to the hard disk drive. When this indicator is on, do *not* put the computer into sleep (standby) mode or turn off the computer. **Note:** Do *not* move the computer while this indicator is on. Sudden physical shock could cause drive errors.
6 Caps lock	Caps Lock mode is enabled.
7 Sleep (Standby) status	Green: The computer is in sleep (standby) mode. Blinking green: The computer is entering sleep (standby) mode or hibernation mode, or is resuming normal operation.
8 Battery status	Green: The battery is charged between 80% to 100% of the capacity, and being discharged between 0% to 80% of the capacity. Blinking green: The battery is charged between 20% to 80% of the capacity, and being charged. When the battery reaches 80% charge, blinking stops, but the charging might continue until the battery is 100% charged. Orange: The battery is charged between 5% and 20% of the capacity, and being discharged. Blinking orange (slow): The battery is charged between 5% to 20% of the capacity, and being charged. When it reaches 20%, the blinking color changes to green. Blinking orange: The battery is charged between 0% to 5% of the capacity. Blinking orange (rapid): An error has occurred in the battery. Off: The battery of the computer is detached.

Chapter 6. Fn key combinations

The following table shows the function of each combination of Fn with a function key.

Table 7. Fn key combinations

Key combination	Description
Fn+F1	Reserved.
Fn+F2	Lock the computer.
Fn+F3	Select a power plan (in Windows XP, power scheme) that has been created by Power Manager, or adjust the power level by using the slider control. When you press this combination, a panel for selecting a power plan (power scheme) appears. **Notes:** 1. To use the Fn+F3 key combination, you must have the ThinkPad PM device driver installed on the computer. 2. If you have logged on with an administrator user ID, and you press Fn+F3, the panel for selecting a power plan (power scheme) appears. If you have logged on with another user ID, and you press Fn+F3, the panel does not appear. 3. You cannot turn off the computer display by pressing Fn+F3.
Fn+F4	Put the computer in sleep (standby) mode. To return to normal operation, press the Fn key only, without pressing a function key. **Notes:** 1. To use the Fn+F4 key combination, you must have the ThinkPad PM device driver installed on the computer. 2. If you want to use the combination to put the computer into hibernation mode or do-nothing mode (in Windows XP, shut the computer down or show the panel for turning off the computer), change the settings in the Power Manager.
Fn+F5	Enable or disable the built-in wireless networking features and the *Bluetooth* features. If you press Fn+F5, a list of wireless features is displayed. You can quickly change the power state of each feature in the list. **Notes:** If you want to use Fn+F5 to enable the feature specified in IEEE standard 802.11, the following device drivers must be installed on the computer beforehand: • ThinkPad Power Management driver • OnScreen Display Utility • Wireless device drivers
Fn+F6	Change the camera settings and the setting of the microphone mute button. When you press Fn+F6, the camera setting window is opened. **Note:** For Windows XP models, the setting of the microphone mute button cannot be changed.

© Copyright Lenovo 2009, 2011

Table 7. Fn key combinations (continued)

Key combination	Description
Fn+F7	Apply a presentation scheme directly, with no need to start Presentation Director. To disable this function and use the Fn+F7 key combination for switching a display output location, start Presentation Director, and change the settings. **Note:** If the computer is a windows 7 model, it does not support presentation schemes, but the Fn+F7 combination is available for switching a display output location.
	For Windows 7: Switch a display output location • Computer display only (LCD) • Computer display and external monitor (same image) • Computer display and external monitor (extended desktop) • External monitor only **Note:** To switch between the computer display and an external monitor, the Win+P key combination is also available. **For Windows Vista and Windows XP:** Switch a display output location • External monitor • Computer display (LCD) and external monitor • Computer display (LCD) **Notes:** 1. This function is not supported if different desktop images are displayed on the computer display and the external monitor (the Extend desktop function). 2. This function does not work while a DVD movie or a video clip is playing. To enable this function, start Presentation Director, and change the Fn+F7 settings. **Note:** Multiple users can log on to a single operating system by using different user IDs. Each user needs to change the settings.
Fn+F8	Change the settings of the UltraNav® pointing device.
Fn+F9	Reserved.
Fn+F10	Reserved.
Fn+F11	Reserved.
Fn+F12	Put the computer into hibernation mode. To return to normal operation, press the power button for less than four seconds. **Note:** To use Fn+F12 for hibernation, you must have the ThinkPad PM device driver installed on the computer.
Fn+PgUp	Turn the ThinkLight on or off. **Note:** This function is supported only on the ThinkPad Notebooks that have the ThinkLight. The on or off status of the ThinkLight is shown on the screen for a few seconds when you press Fn+PgUp.
Fn+Home	The computer display becomes brighter.
Fn+End	The computer display becomes dimmer.
Fn+Spacebar	Enable the FullScreen Magnifier function.
Fn+PrtSc	Has the same function as the SysRq key.
Fn+ScrLk	Enable or disable the numeric keypad. The indicator of numeric lock will be displayed on the screen.

Table 7. Fn key combinations (continued)

Key combination	Description
Fn+Pause	Has the same function as the Break key.
Fn+cursor keys	These key combinations work with Windows Media Player. Fn+down arrow key works for the Play or Pause button, Fn+up arrow key for the Stop button, Fn+right arrow key for the Next Track button, and Fn+left arrow key for the Previous Track button.

Chapter 7. FRU replacement notices

This chapter presents notices related to removing and replacing parts. Read this chapter carefully before replacing any FRU.

Screw notices

Loose screws can cause a reliability problem. In the ThinkPad Notebook, this problem is addressed with special nylon-coated screws that have the following characteristics:

- They maintain tight connections.
- They do not easily come loose, even with shock or vibration.
- They are harder to tighten.
- Each one should be used only once.

Do the following when you service this machine:

- Keep the screw kit (for the P/N, see “Miscellaneous parts” on page 254) in your tool bag.
- Always use new screws.
- Use a torque screwdriver if you have one.

Tighten screws as follows:

- **Plastic to plastic**

  Turn an additional **90 degrees** after the screw head touches the surface of the plastic part:

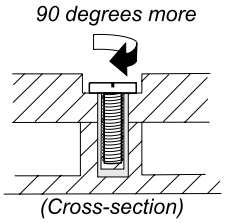

- **Logic card to plastic**

  Turn an additional **180 degrees** after the screw head touches the surface of the logic card:

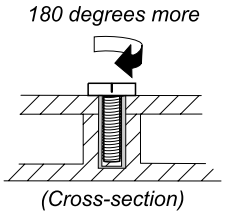

- **Torque driver**

  If you have a torque driver, refer to the “Torque” column for each step.
- Make sure that you use the correct screw. If you have a torque screwdriver, tighten all screws firmly to the torque shown in the table. **Never use a screw that you removed. Use a new one. Make sure that all of the screws are tightened firmly.**
- Ensure torque screw drivers are calibrated correctly following country specifications.

© Copyright Lenovo 2009, 2011

Retaining serial numbers

This section includes the following descriptions:

- “Restoring the serial number of the system unit” on page 56
- “Retaining the UUID” on page 56
- “Reading or writing the ECA information” on page 57

Restoring the serial number of the system unit

When the computer was manufactured, the EEPROM on the system board was loaded with the serial numbers of the system and all major components. These numbers need to remain the same throughout the life of the computer.

If you replace the system board, you must restore the serial number of the system unit to its original value.

Before replacing the system board, save the original serial number by doing the following:

1. Install the LENOVO ThinkPad Hardware Maintenance Diskette Version 1.76 or later, and restart the computer.
2. From the main menu, select **1. Set System Identification**.
3. Select **2. Read S/N data from EEPROM**.

The serial number of each device in your computer is displayed; the serial number of the system unit is listed as follows:

- 20: Serial number

Write down that number.

Note: The serial number of the system unit is also written on the label attached to the bottom of the computer.

After you have replaced the system board, restore the serial number by doing the following:

1. Install the LENOVO ThinkPad Hardware Maintenance Diskette Version 1.76 or later and restart the computer.
2. From the main menu, select **1. Set System Identification**.
3. Select **1. Add S/N data from EEPROM**. Follow the instructions on the screen.

If the MTM and Product ID numbers differ from each other on the rear label, use what is shown for the Product ID field. See example below:

MTM on rear label:

TTTT-CTO S/N SSSSSSS

Product ID on rear label:

TTTT-MMM (Use this number when setting Serial Number)

In the example, the Serial Number to be input is '1STTTTMMMSSSSSSS'.

Retaining the UUID

The Universally Unique Identifier (UUID) is a 128-bit number uniquely assigned to your computer at production and stored in the EEPROM of your system board.

The algorithm that generates the number is designed to provide unique IDs until the year A.D. 3400. No two computers in the world have the same number.

When you replace the system board, you must set the UUID on the new system board as follows:

1. Install the LENOVO ThinkPad Hardware Maintenance Diskette Version 1.76 or later, and restart the computer.
2. From the main menu, select **4. Assign UUID**. A new UUID is created and written. If a valid UUID already exists, it is not overwritten.

Reading or writing the ECA information

Information on Engineering Change Announcements (ECA) are stored in the EEPROM of the system board. The electronic storage of this information simplifies the procedure to check if the ECA has been previously applied to a machine. The machine does not need to be disassembled to check for the ECA application.

To check what ECAs have been previously applied to the machine, use the ECA Information Read/Write function on the LENOVO ThinkPad Hardware Maintenance Diskette Version 1.76 or later.

1. Insert the LENOVO ThinkPad Hardware Maintenance Diskette Version 1.76 or later, and restart the computer.
2. From the main menu, select **6. Set ECA Information**.
3. To read ECA information, select **2. Read ECA/rework number from EEPROM** and follow the instruction.
4. To read box build date, select **5. Read box build date from EEPROM**, and follow the instruction on the screen.

After an ECA has been applied to the machine, the EEPROM must be updated to reflect the ECA's application. Use the LENOVO ThinkPad Hardware Maintenance Diskette Version 1.76 or later to update the EEPROM.

Note: Only the ECA number is stored in the EEPROM. The machine type of the ECA is assumed be the same as the machine type of the machine that had the ECA applied to it.

1. Insert the LENOVO ThinkPad Hardware Maintenance Diskette Version 1.76 or later, and restart the computer.
2. From the main menu, select **6. Set ECA Information**.
3. To write ECA information, select **1. Write ECA/rework number from EEPROM**, and follow the instruction.
4. To write box build date, select **4. Write box build date from EEPROM**, and follow the instruction on the screen.

If the system board is being replaced, try to read the ECA information from the old system board and transfer the information to the new system. If the system board is inoperable, this will not be possible.

Chapter 8. Removing and replacing a FRU

This chapter presents directions and drawings for use in removing and replacing a FRU. Be sure to observe the following general rules:

1. Do not try to service any computer unless you have been trained and certified. An untrained person runs the risk of damaging parts.
2. Before replacing any FRU, review Chapter 7 “FRU replacement notices” on page 55.
3. Begin by removing any FRUs that have to be removed before the failing FRU. Any such FRUs are listed at the top of the page. Remove them in the order in which they are listed.
4. Follow the correct sequence in the steps for removing the FRU, as given in the drawings by the numbers in square callouts.
5. When turning a screw to replace a FRU, turn it in the direction as given by the arrow in the drawing.
6. When removing the FRU, move it in the direction as given by the arrow in the drawing.
7. To put the new FRU in place, reverse the removal procedure and follow any notes that pertain to replacement. For information about connecting and arranging internal cables, see Chapter 9 “Locations” on page 115.
8. When replacing a FRU, use the correct screw as shown in the procedures.

DANGER

Before removing any FRU, turn off the computer, unplug all power cords from electrical outlets, remove the battery pack, and then disconnect any interconnecting cables.

Attention: After replacing a FRU, do not turn on the computer until you have made sure that all screws, springs, and other small parts are in place and none are loose inside the computer. Verify this by shaking the computer gently and listening for rattling sounds. Metallic parts or metal flakes can cause electrical short circuits.

Attention: The system board is sensitive to, and can be damaged by, electrostatic discharge. Before touching it, establish personal grounding by touching a ground point with one hand or by using an electrostatic discharge (ESD) strap (P/N 6405959).

1010 Battery pack

Important notice for replacing a battery pack:

Lenovo ThinkVantage Toolbox (in Windows 7) and Lenovo System Toolbox (in Windows Vista and Windows XP) have an automatic battery diagnostic that determines if the battery pack is defective. A battery pack FRU should not be replaced unless this diagnostic shows that the battery is defective.

The only exception to this is if the battery pack is physically damaged or a customer is reporting a possible safety issue.

If Lenovo ThinkVantage Toolbox or Lenovo System Toolbox is not installed in the computer, the customer should download this program before a non-physically damaged battery pack is replaced. Note that a physically damaged battery pack is non-warranty replacement.

© Copyright Lenovo 2009, 2011

Table 8. Removal steps of battery pack

DANGER

Use only the battery specified in the parts list for your computer. Any other battery could ignite or explode.

Unlock the battery latch **1**. Holding the battery lock lever in the unlocked position **2**, remove the battery pack in the direction shown by arrow **3**.

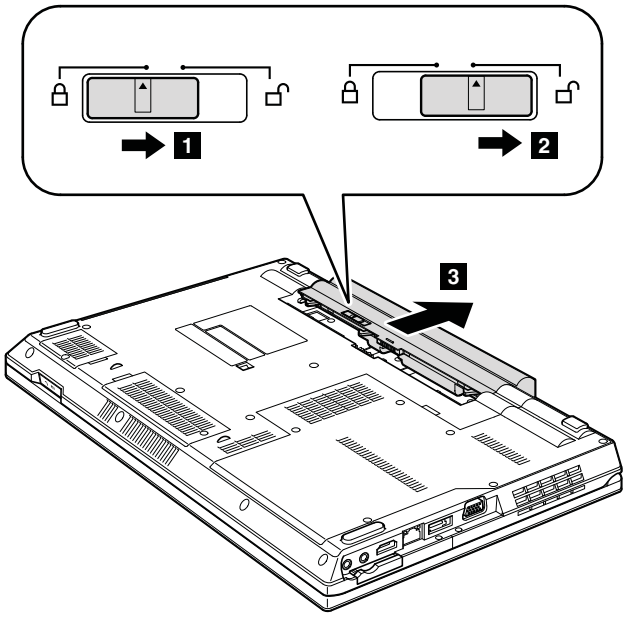

When installing: Install the battery pack along the slide rails of the slot. Then make sure that the battery release lever is in the locked position.

1020 ExpressCard blank bezel and Media Card blank bezel

Table 9. Removal steps of ExpressCard blank bezel

When you press the ExpressCard blank bezel **1**, it pops out **2**.

Table 9. Removal steps of ExpressCard blank bezel (continued)

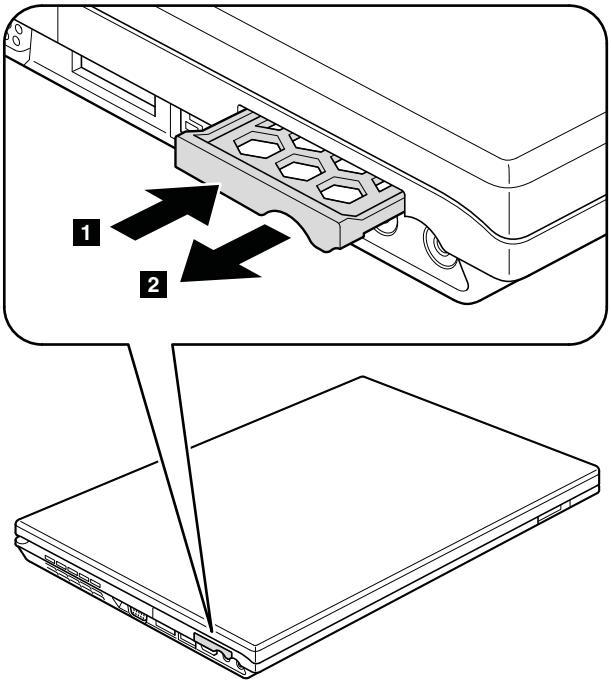

When installing: Make sure that the bezel is correctly oriented as shown in this figure.

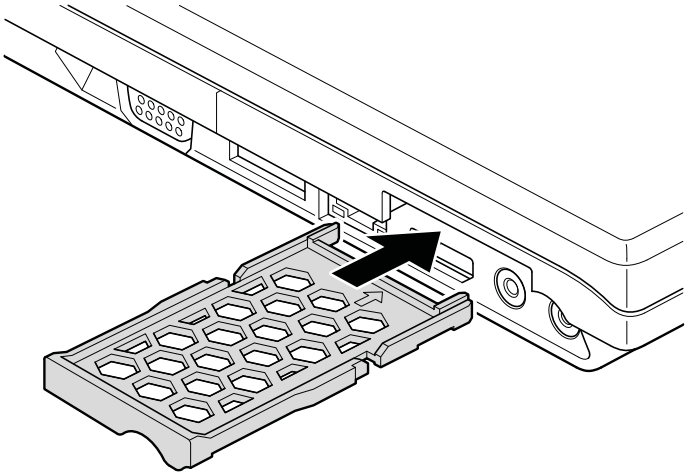

Table 10. Removal steps of Media Card blank bezel

When you press the Media Card blank bezel **1**, it pops out **2**.

Table 10. Removal steps of Media Card blank bezel (continued)

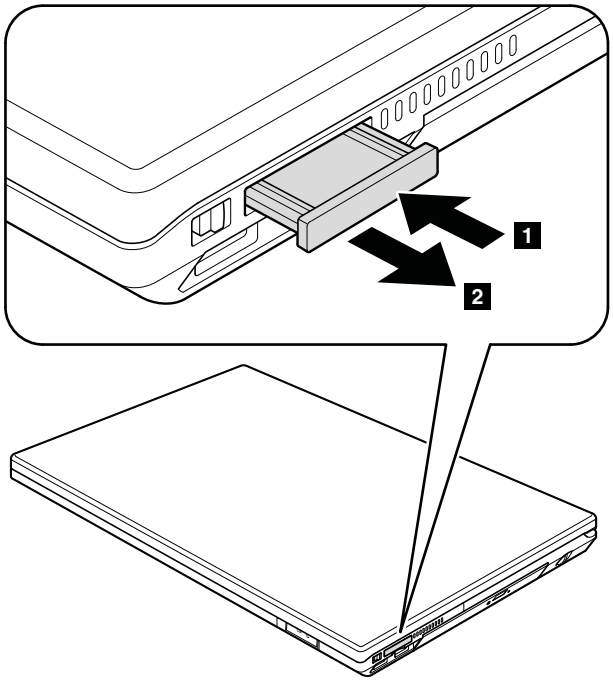

When installing: Make sure that the bezel is correctly oriented as shown in this figure.

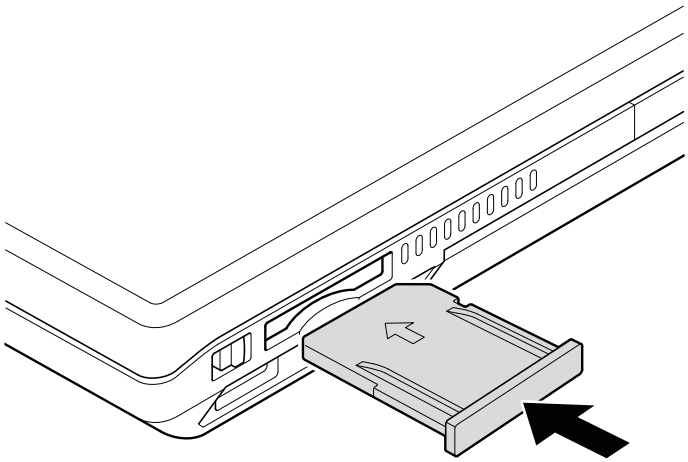

1030 Optical drive or travel cover

For access, remove this FRU:

- “1010 Battery pack” on page 59

Table 11. Removal steps of optical drive or travel cover

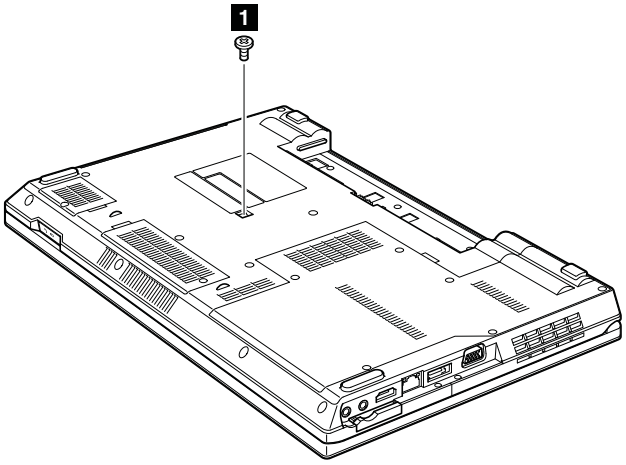

Step	Screw (quantity)	Color	Torque
1	M2 × 8 mm, wafer-head, nylon-coated (1)	Black	0.181 Nm (1.85 kgfcm)

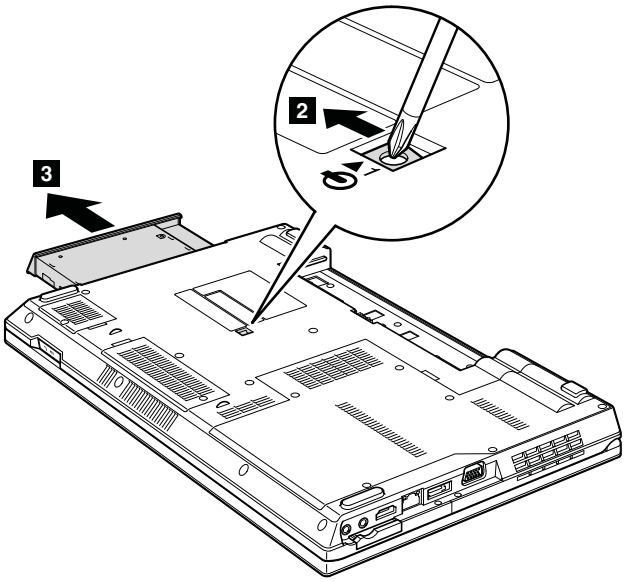

1040 Thermal cover

For access, remove this FRU:

- “1010 Battery pack” on page 59

Table 12. Removal steps of thermal cover

Note: Loosen the screws **1**, but do not remove them.

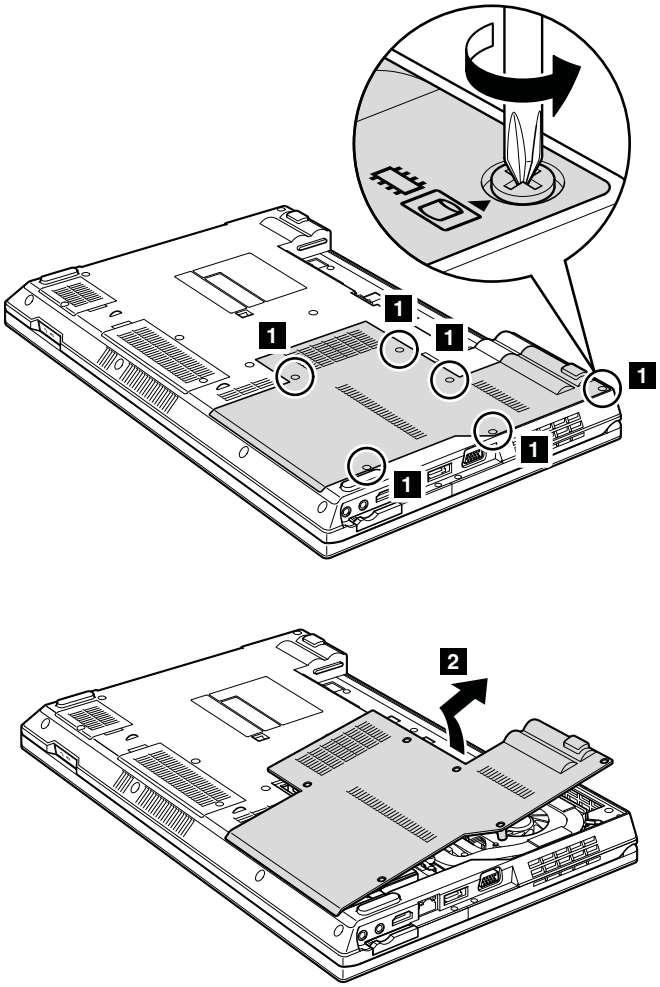

Attention: Do *not* touch or apply any excessive force to the fan motor located in the slot. It might cause damage to the fan assembly or the computer to mulfunction.

1050 Hard disk drive (HDD) assembly

For access, remove these FRUs in order:

- "1010 Battery pack" on page 59
- "1040 Thermal cover" on page 63

Attention:

- **Do *not* drop the drive or apply any physical shock to it.** The drive is sensitive to physical shock. Improper handling can cause damage and permanent loss of data.
- Before removing the drive, have the user make a backup copy of all the information on it if possible.
- Never remove the drive while the computer is operating or is in suspend mode.

Table 13. Removal steps of HDD assembly

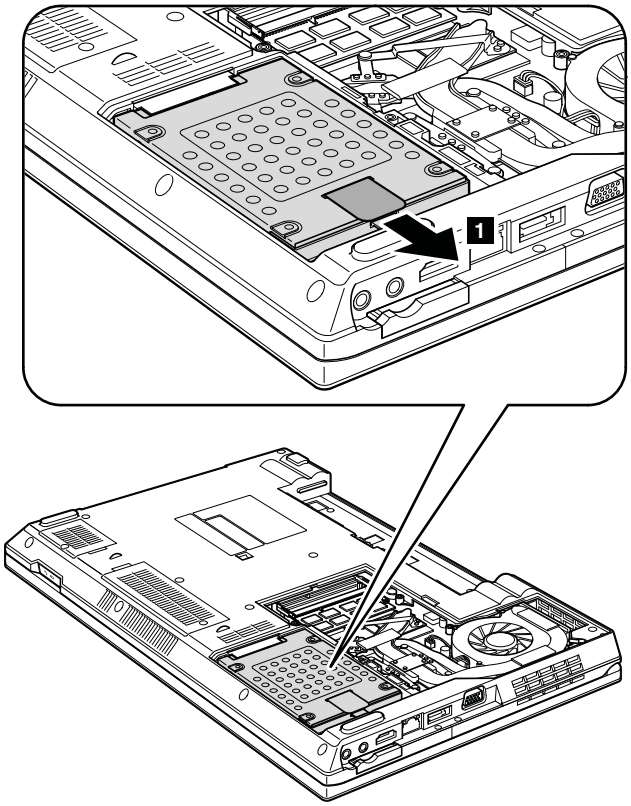

When installing: Make sure that the HDD connector is attached firmly.

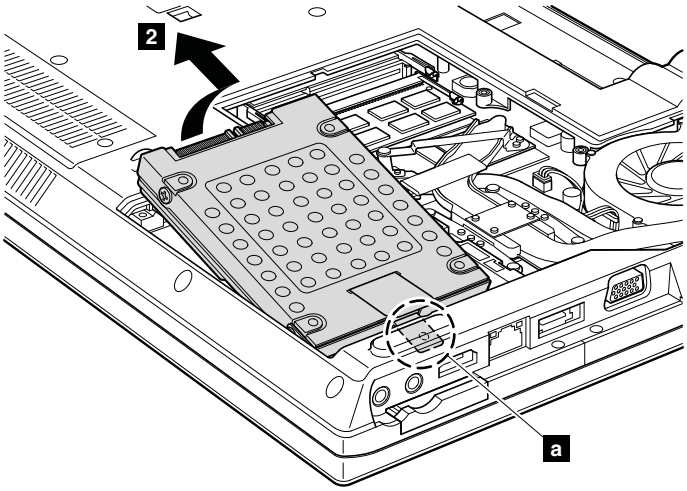

When installing: Do *not* apply excessive force to the HDD bracket **a**. To do so, you might bend or break it.

1060 DIMM

For access, remove these FRUs in order:

- "1010 Battery pack" on page 59
- "1040 Thermal cover" on page 63

Table 14. Removal steps of DIMM

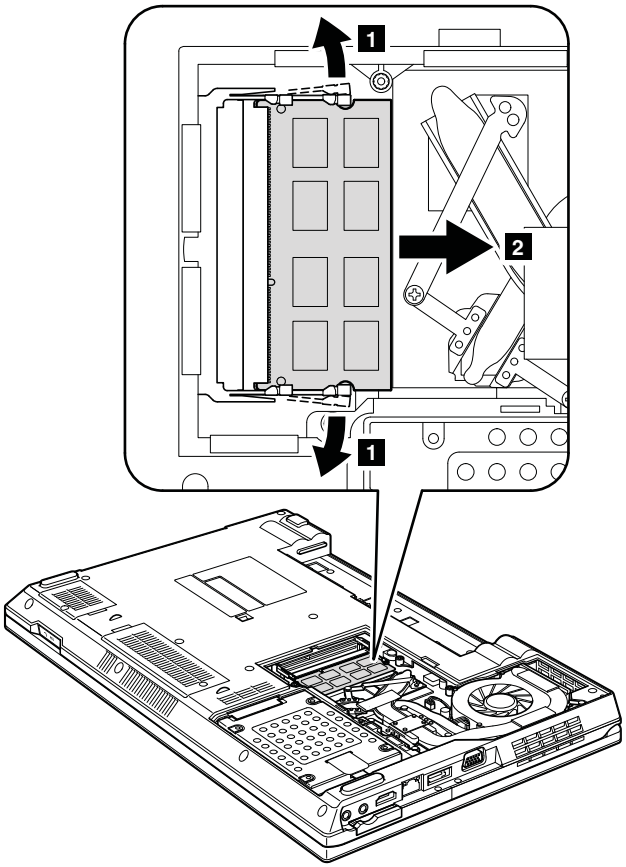

Note: If only one DIMM is used on the computer you are servicing, the card must be installed in SLOT-0 (a: lower slot), but not in SLOT-1 (b: upper slot).

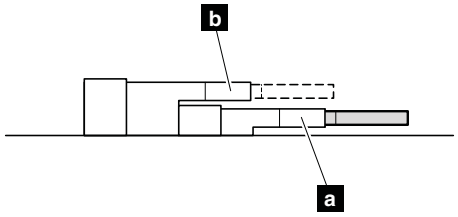

When installing: Insert the notched end of the DIMM into the socket. Press the DIMM firmly, and pivot it until it snaps into the place. Make sure that it is firmly fixed in the slot and does not move easily.

1070 Fan assembly

For access, remove these FRUs in order:

- "1010 Battery pack" on page 59
- "1040 Thermal cover" on page 63

Attention:

- Do *not* handle the fan roughly. Improper handling of the fan can cause distortion or deformation and imperfect contact with components.

- Do *not* touch or apply any excessive force to the fan motor. It might cause damage to the fan assembly or the computer to mulfunction.

Table 15. Removal steps of fan assembly

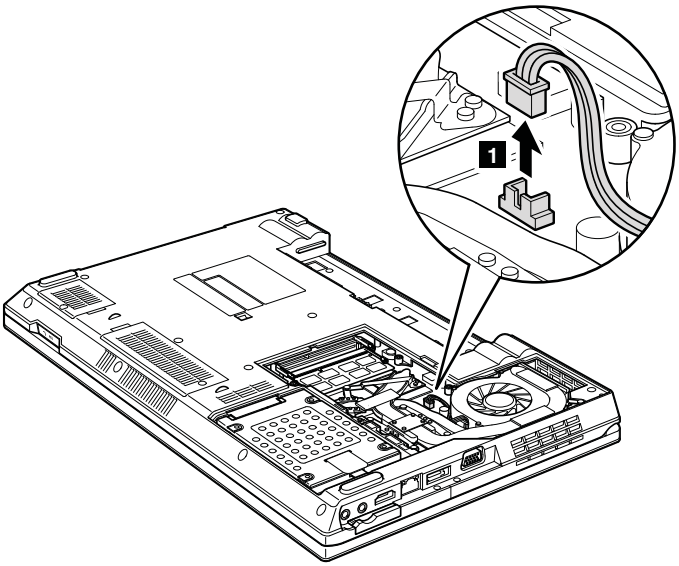

When installing: Make sure that the fan connector is attached firmly to the system board.

Note: Loosen the screws 2a to 2f in order, but do *not* remove them. When you attach the fan, secure the screws in order.

For ThinkPad SL510, L510, and L512:

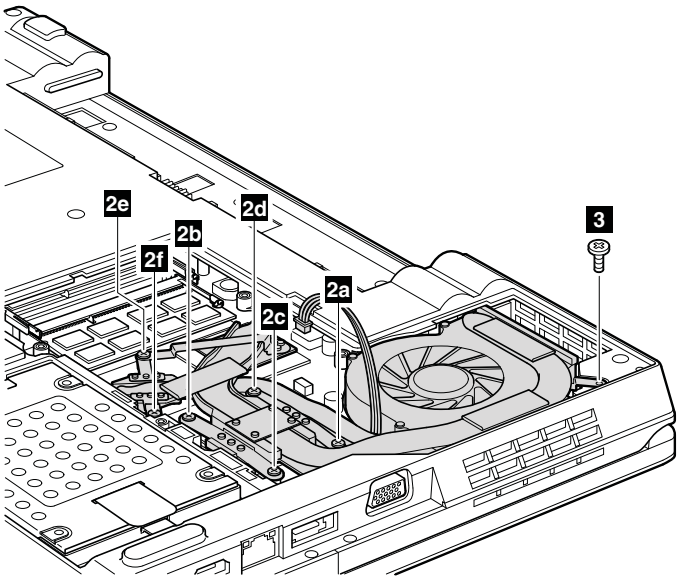

Table 15. Removal steps of fan assembly (continued)

For ThinkPad SL410, L410, and L412:

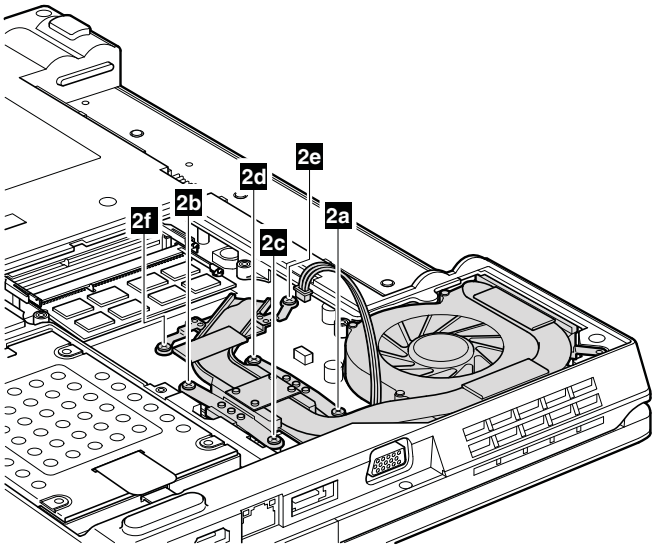

Notes:

- Number of the screws in step 2 differs by models.
- Step 3 is only for the models with 15.6-inch widescreen. For models with 14.0-inch widescreen, skip step 3.

Step	Screw (quantity)	Color	Torque
3	M2 × 4 mm, wafer-head, nylon-coated (1)	Silver	0.181 Nm (1.85 kgfcm)

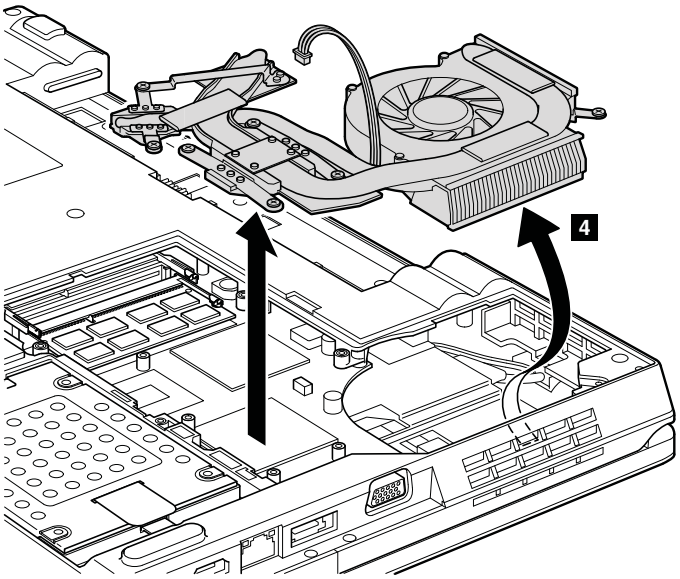

Table 15. Removal steps of fan assembly (continued)

When installing: Before you attach the fan assembly to the computer, apply thermal grease, at an amount of 0.2 grams, on the parts marked **a** as in the following figures. Either too much or too less application of grease can cause a thermal problem due to imperfect contact with a component. For the new CPU thermal device/fan, you need to peel the thin film off from the rubbers marked **b**.

Discrete fan assembly for ThinkPad SL410, L410, SL510, and L510:

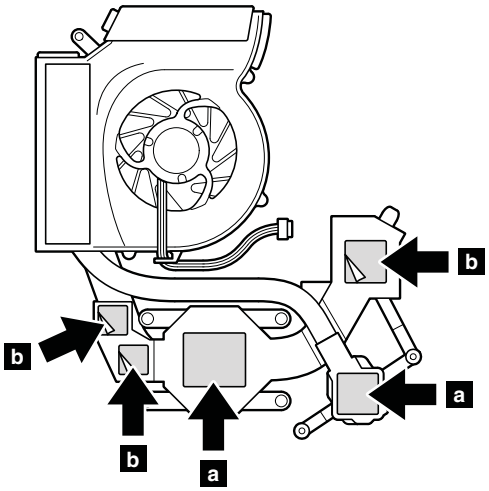

Integrated fan assembly for ThinkPad SL410, L410, SL510, and L510:

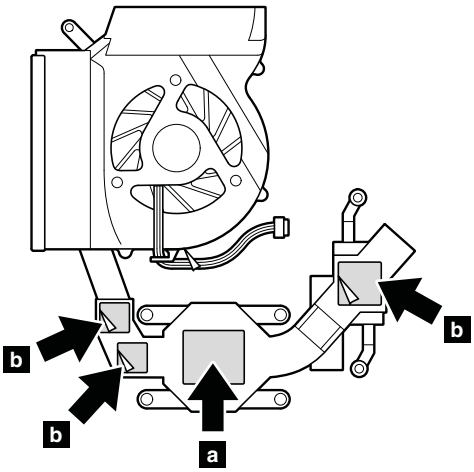

Table 15. Removal steps of fan assembly (continued)

Discrete fan assembly for ThinkPad L412 and L512:

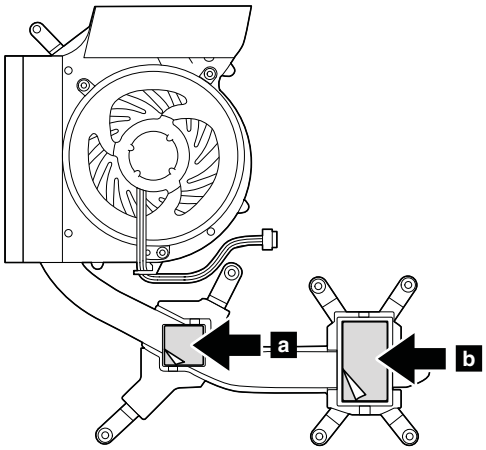

For integrated fan assembly for ThinkPad L412 and L512:

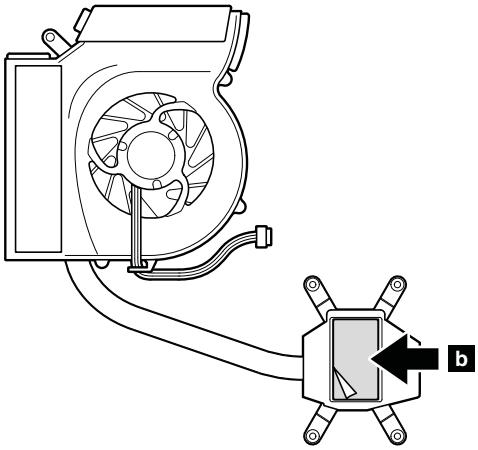

1080 CPU

For access, remove these FRUs in order:

- "1010 Battery pack" on page 59
- "1040 Thermal cover" on page 63
- "1070 Fan assembly" on page 66

Attention: CPU is extremely sensitive. When you service the CPU, avoid any kind of rough handling.

Table 16. Removal steps of CPU

Rotate the head of the screw in the direction shown by arrow **1** to release the lock; then remove the CPU **2**.

Table 16. Removal steps of CPU (continued)

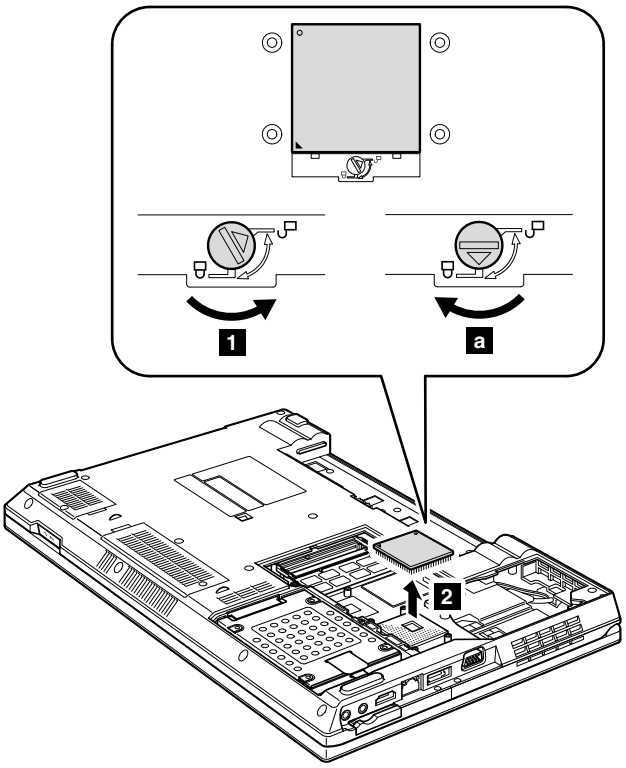

When installing: Place the CPU on the CPU socket, and then rotate the head of the screw in the direction shown by arrow a to secure the CPU.

1090 SIM slot cover

For access, remove this FRU:

- "1010 Battery pack" on page 59

Table 17. Removal steps of SIM slot cover

Note: Loosen the screw 1, but do *not* remove it.

Table 17. Removal steps of SIM slot cover (continued)

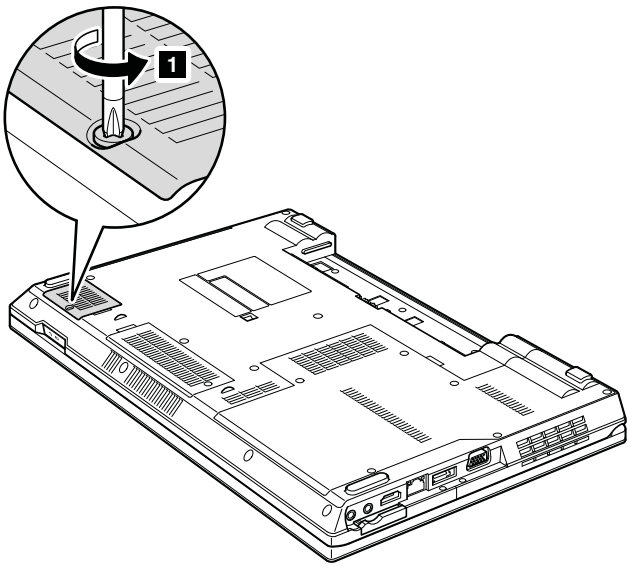

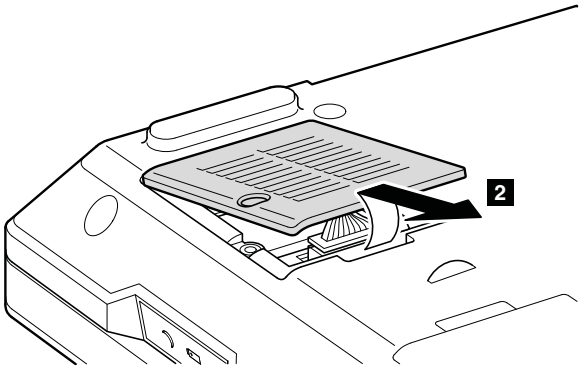

Some models in this product might have the SIM card that the customer has been installed.

If the computer you are servicing has the SIM card, remove it before you start the servicing.

After you finish the servicing, make sure that you insert the card back into the slot firmly.

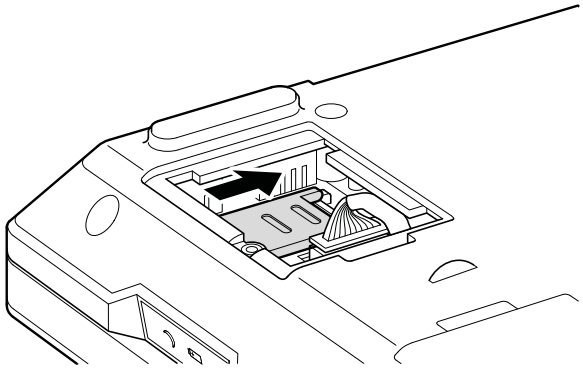

Table 17. Removal steps of SIM slot cover (continued)

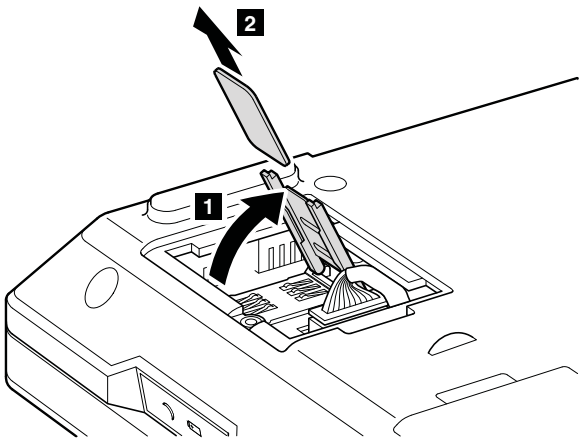

1100 Wireless WAN slot cover and PCI Express Mini Card for wireless WAN

For access, remove this FRU:

- "1010 Battery pack" on page 59

Table 18. Removal steps of wireless WAN slot cover and PCI Express Mini Card for wireless WAN

Note: Loosen the screw **1**, but do *not* remove it.

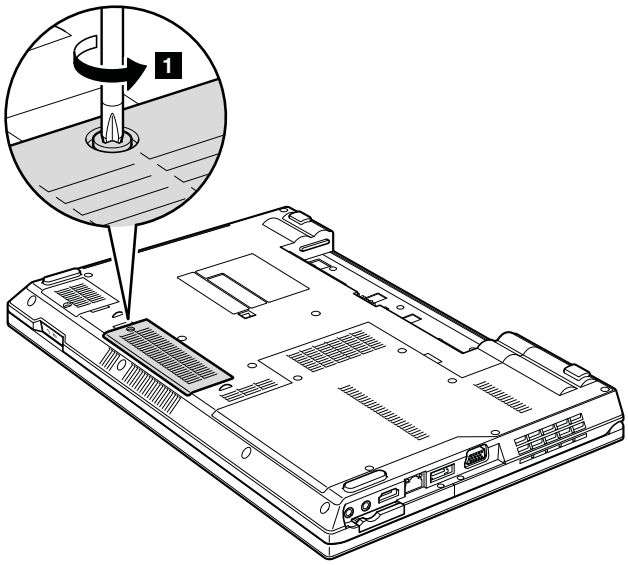

Table 18. Removal steps of wireless WAN slot cover and PCI Express Mini Card for wireless WAN (continued)

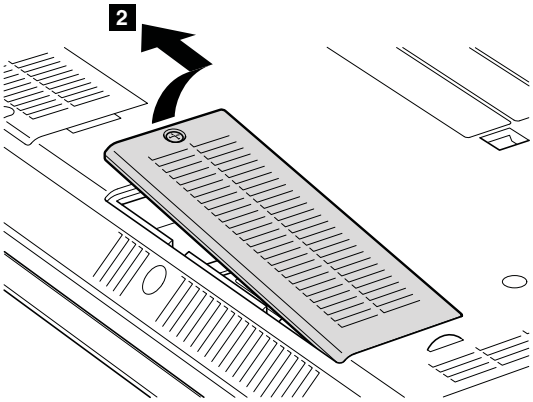

In step 3a and 3b, unplug the jacks by using the removal tool antenna RF connector (P/N: 08K7159) or pick the connectors with your fingers and gently unplug them in direction of the arrow.

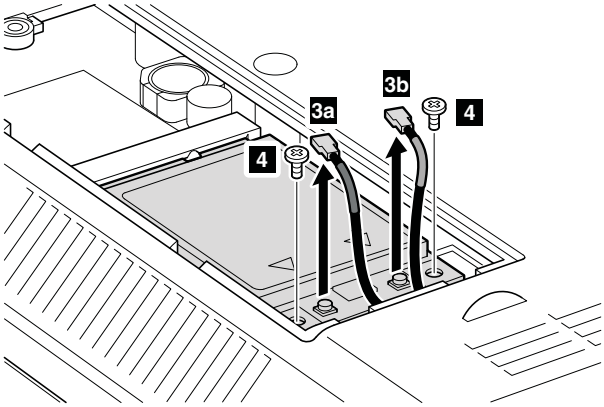

When installing: Plug the red cable 3a into the jack labeled **MAIN** , and the blue cable 3b into the jack labeled **AUX** on the card.

Step	Screw (quantity)	Color	Torque
4	M2 × 3 mm, wafer-head, nylon-coated (2)	Black	0.181 Nm (1.85 kgfcm)

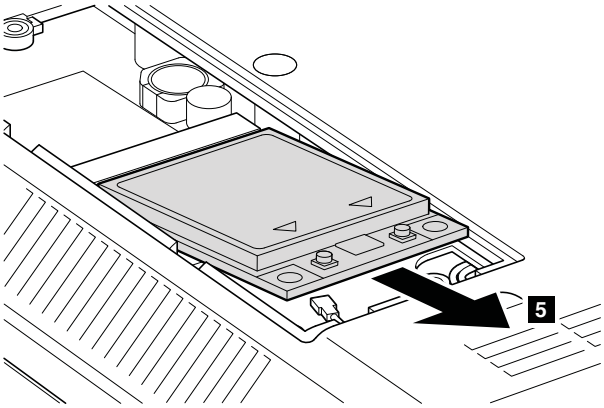

1110 Palm rest assembly with cables

For access, remove these FRUs in order:

- “1010 Battery pack” on page 59
- “1030 Optical drive or travel cover” on page 62

Note: In models with the fingerprint reader, the sensor is attached to the palm rest FRU. If the fingerprint reader has any defects, you can replace it by the procedures given in this section, which are the same for a palm rest with or without a fingerprint reader.

Table 19. Removal steps of palm rest assembly with cables

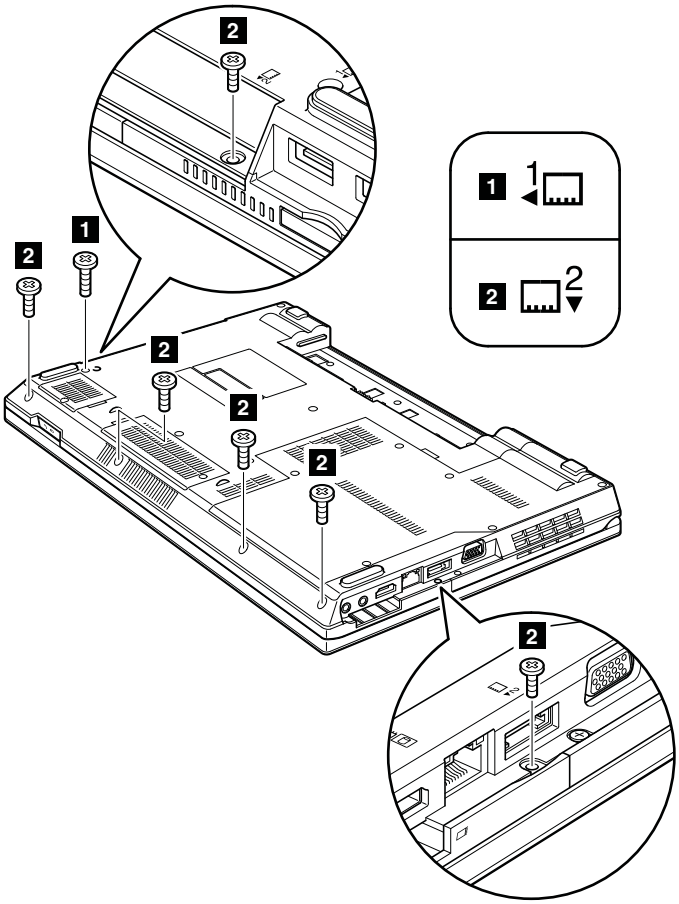

Step	Screw (quantity)	Color	Torque
1	M2 × 8 mm, wafer-head, nylon-coated (1)	Black	0.181 Nm (1.85 kgfcm)
2	M2 × 5 mm, wafer-head, nylon-coated (6)	Black	0.181 Nm (1.85 kgfcm)

Table 19. Removal steps of palm rest assembly with cables (continued)

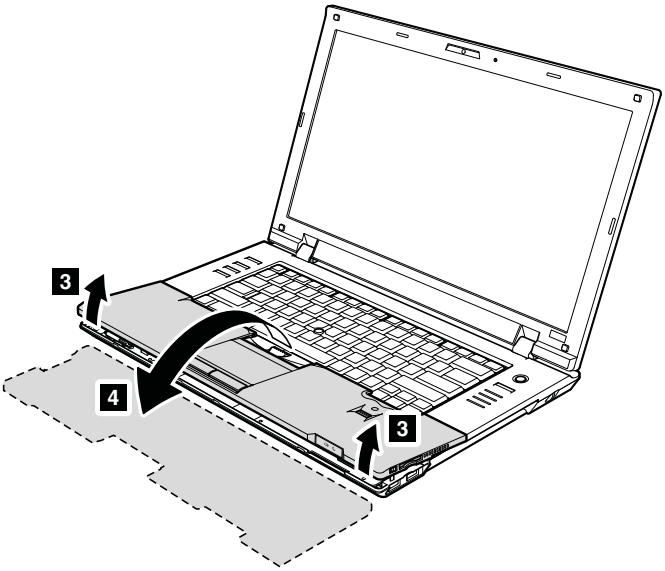

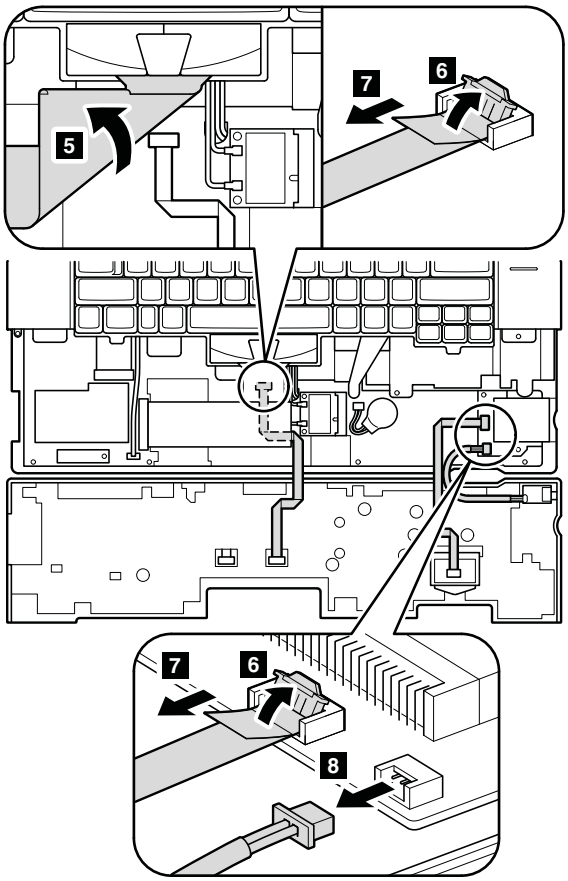

Table 20. Installation of palm rest assembly with cables

When installing:

1. Attach the cables to the system board firmly.
2. Attach the palm rest so that the two small projections of the palm rest (a) firmly fit into the guide holes of the keyboard bezel as shown in this figure.

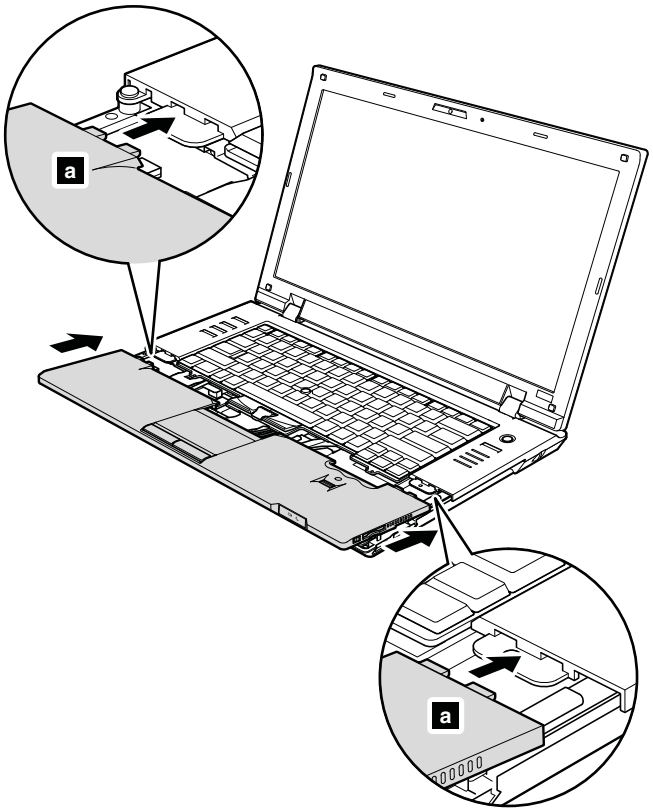

3. Push the front side of the palm rest until it clicks into place.

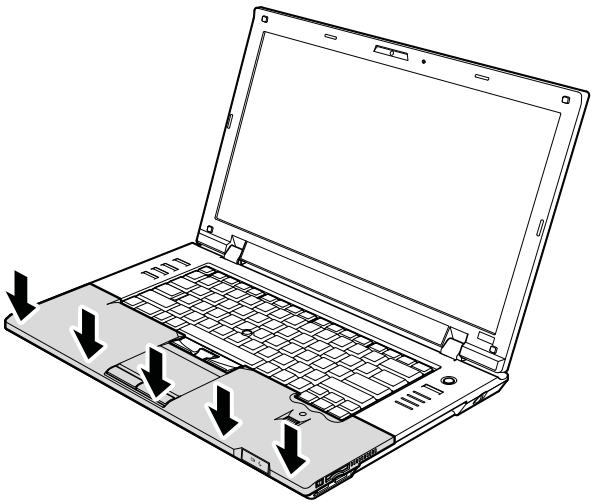

4. Close the LCD cover and turn the computer over. Then fasten the screws to secure the palm rest.

1120 PCI Express Mini Card for wireless LAN

For access, remove these FRUs in order:

- “1010 Battery pack” on page 59
- “1030 Optical drive or travel cover” on page 62
- “1110 Palm rest assembly with cables” on page 75

Table 21. Removal steps of PCI Express Mini Card for wireless LAN

In step **1a** and **1b**, unplug the jacks by using the removal tool antenna RF connector (P/N: 08K7159) or pick the connectors with your fingers and gently unplug them in direction of the arrow.

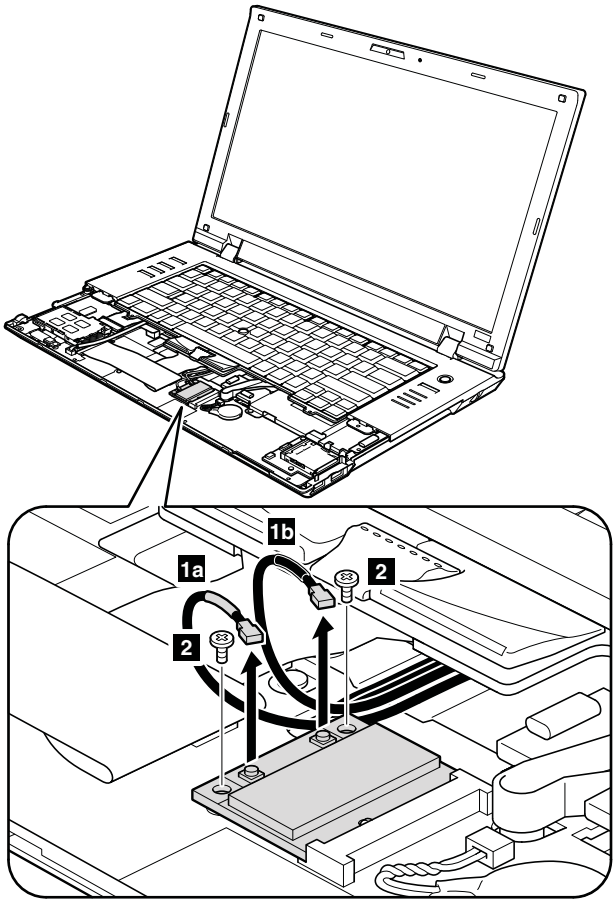

Step	Screw (quantity)	Color	Torque
2	M2 × 3 mm, wafer-head, nylon-coated (2)	Black	0.181 Nm (1.85 kgfcm)

Table 21. Removal steps of PCI Express Mini Card for wireless LAN (continued)

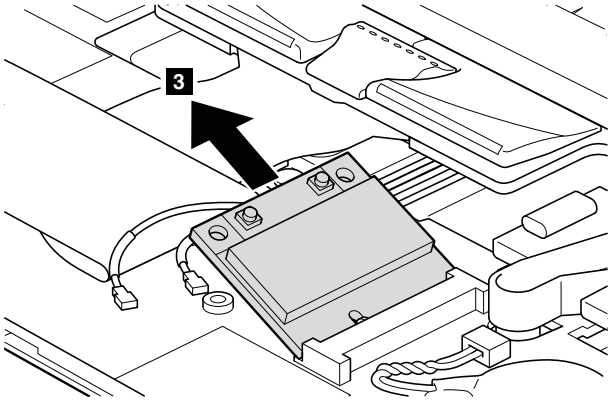

When installing: Plug the gray cable into the jack labeled **MAIN**, and the black cable into the jack labeled **AUX** on the card.

1130 Backup battery

For access, remove these FRUs in order:

- "1010 Battery pack" on page 59
- "1030 Optical drive or travel cover" on page 62
- "1110 Palm rest assembly with cables" on page 75

DANGER

Use only the battery specified in the parts list for your computer. Any other battery could ignite or explode.

Table 22. Removal steps of backup battery

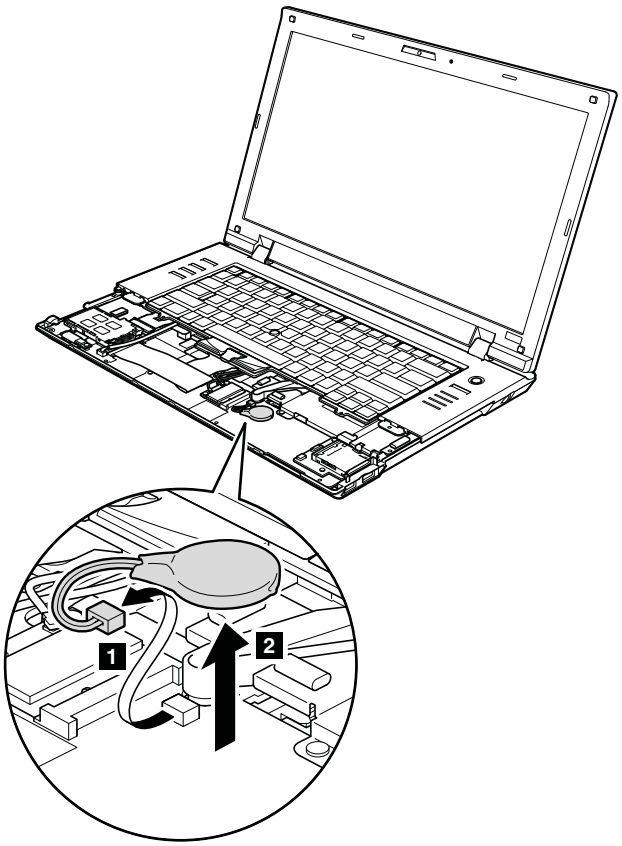

When installing: Make sure that the battery connector is attached firmly to the system board.

1140 *Bluetooth* daughter card (BDC-2)

For access, remove these FRUs in order:

- “1010 Battery pack” on page 59
- “1030 Optical drive or travel cover” on page 62
- “1110 Palm rest assembly with cables” on page 75

Table 23. Removal steps of BDC-2

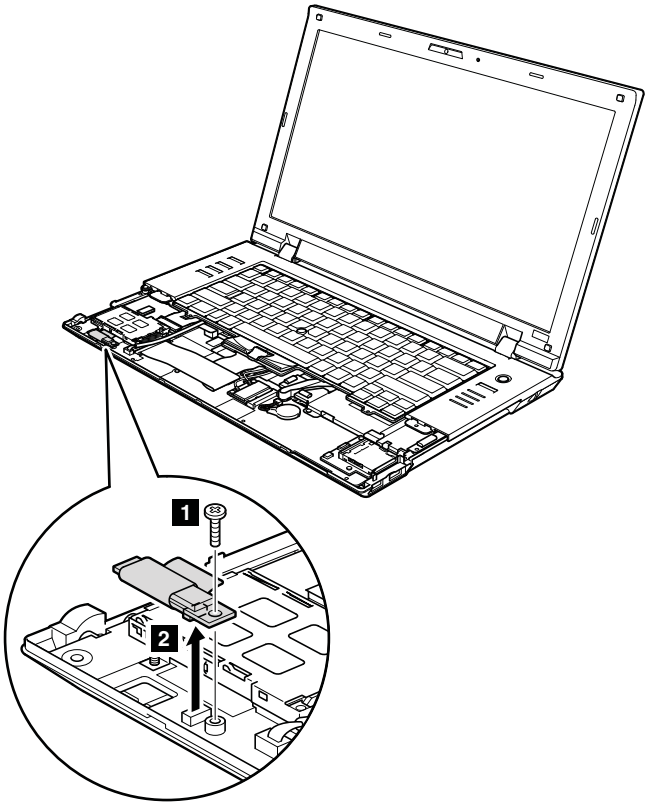

Step	Screw (quantity)	Color	Torque
1	M2 × 3 mm, wafer-head, nylon-coated (1)	Black	0.181 Nm (1.85 kgfcm)

When installing: Make sure that the connector on bottom side of the card is attached firmly to the system board.

1150 Media Card Reader slot board and Media Card Reader cable assembly

For access, remove these FRUs in order:

- “1010 Battery pack” on page 59
- “1020 ExpressCard blank bezel and Media Card blank bezel” on page 60
- “1030 Optical drive or travel cover” on page 62
- “1090 SIM slot cover” on page 71
- “1110 Palm rest assembly with cables” on page 75

Table 24. Removal steps of Media Card Reader slot board and Media Card Reader cable assembly

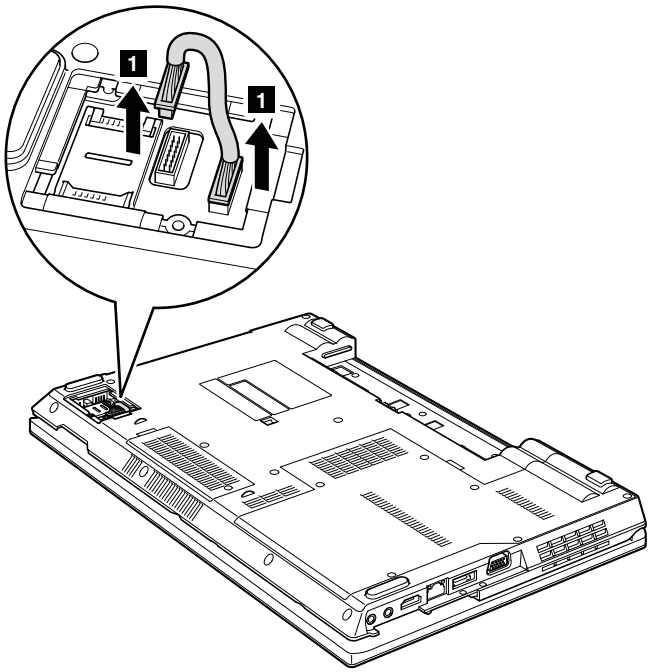

When installing: Make sure that the Media Card Reader cable assembly is attached firmly to the system board and the Media Card Reader slot board.

Table 24. Removal steps of Media Card Reader slot board and Media Card Reader cable assembly (continued)

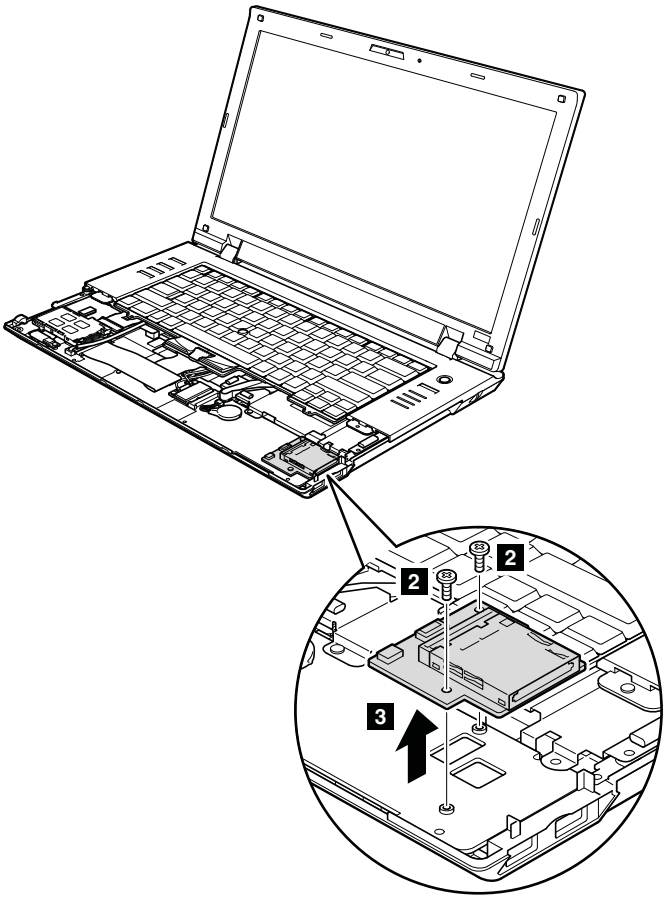

Step	Screw (quantity)	Color	Torque
2	M2 × 3 mm, wafer-head, nylon-coated (2)	Black	0.181 Nm (1.85 kgfcm)

1160 Keyboard

For access, remove these FRUs in order:

- “1010 Battery pack” on page 59
- “1030 Optical drive or travel cover” on page 62
- “1110 Palm rest assembly with cables” on page 75

Table 25. Removal steps of keyboard

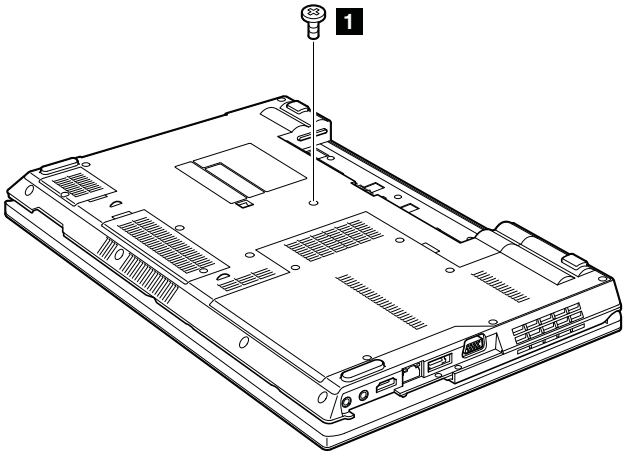

Step	Screw (quantity)	Color	Torque
1	M2 × 5 mm, wafer-head, nylon-coated (1)	Black	0.181 Nm (1.85 kgfcm)

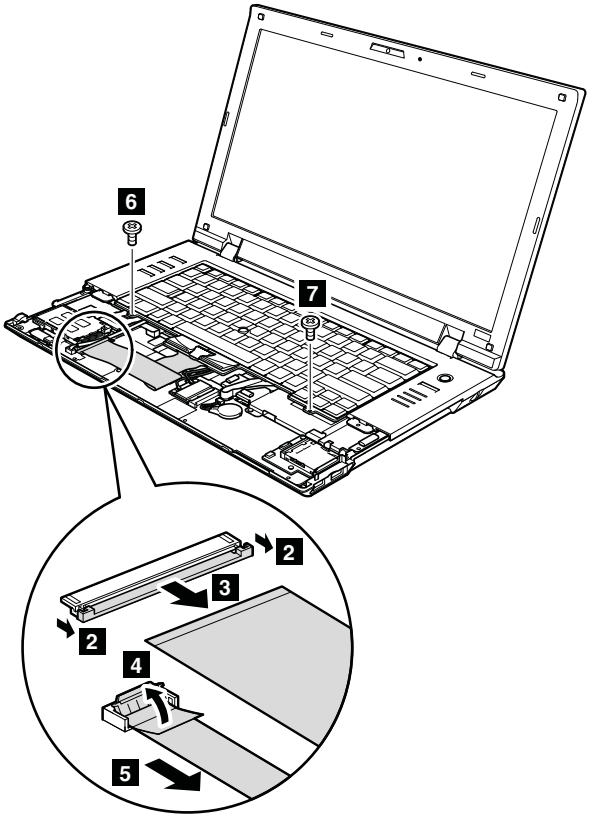

Step	Screw (quantity)	Color	Torque
6	M2 × 3 mm, wafer-head, nylon-coated (1)	Black	0.181 Nm (1.85 kgfcm)

Table 25. Removal steps of keyboard (continued)

7	M2 × 2 mm, wafer-head, nylon-coated (1)	Silver	0.181 Nm (1.85 kgfcm)

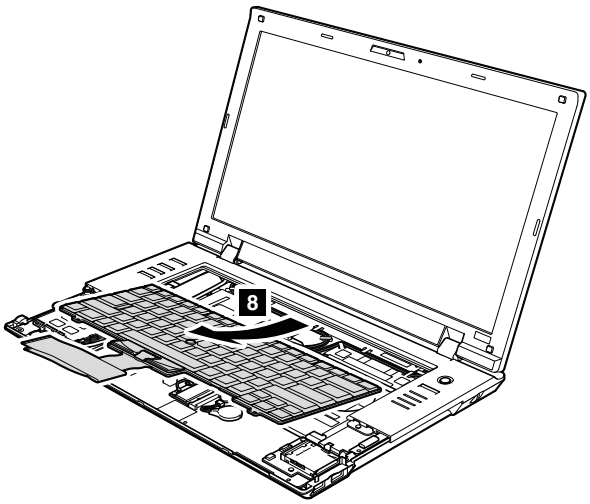

When installing the keyboard, do as follows:

Table 26. Installation of the keyboard

1. Attach the connectors.
2. Attach the keyboard so that the keyboard edges are under the frame as shown in this figure.

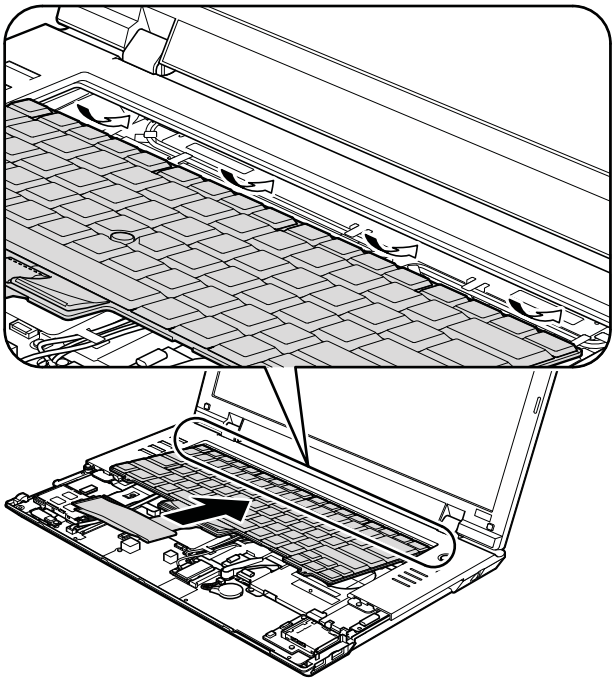

3. To make sure that the front side of the keyboard is housed firmly, gently press the keys with your thumbs and try to slide the keyboard toward you.
4. Secure the keyboard by tightening the screws from the bottom side of the computer.

1170 Keyboard bezel

For access, remove these FRUs in order:

- “1010 Battery pack” on page 59
- “1030 Optical drive or travel cover” on page 62
- “1070 Fan assembly” on page 66
- “1100 Wireless WAN slot cover and PCI Express Mini Card for wireless WAN” on page 73
- “1110 Palm rest assembly with cables” on page 75
- “1120 PCI Express Mini Card for wireless LAN” on page 78
- “1160 Keyboard” on page 83

Table 27. Removal steps of keyboard bezel

Note: Steps 2a and 3a are only for ThinkPad SL510, L510, and L512. For ThinkPad SL410, L410, and L412, skip steps 2a and 3a.

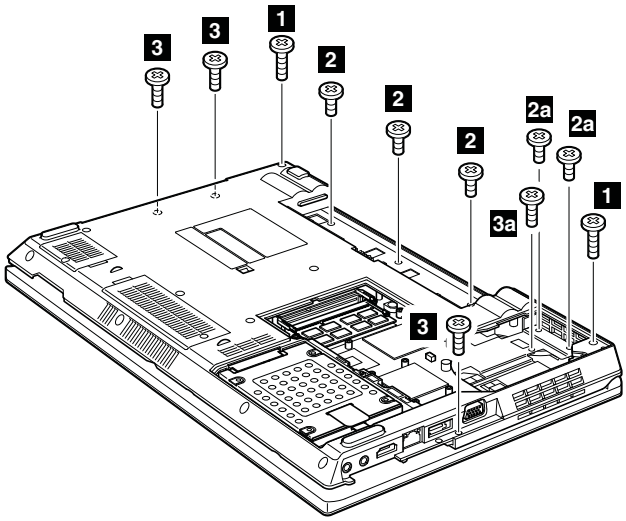

Step	Screw (quantity)	Color	Torque
1	M2.5 × 6.5 mm, wafer-head, nylon-coated (2)	Black	0.392 Nm (4 kgfcm)
2	M2 × 3 mm, wafer-head, nylon-coated (3)	Black	0.181 Nm (1.85 kgfcm)
2a	M2 × 3 mm, wafer-head, nylon-coated (2)	Black	0.181 Nm (1.85 kgfcm)
3	M2 × 5 mm, wafer-head, nylon-coated (3)	Black	0.181 Nm (1.85 kgfcm)
3a	M2 × 5 mm, wafer-head, nylon-coated (1)	Black	0.181 Nm (1.85 kgfcm)

Table 27. Removal steps of keyboard bezel (continued)

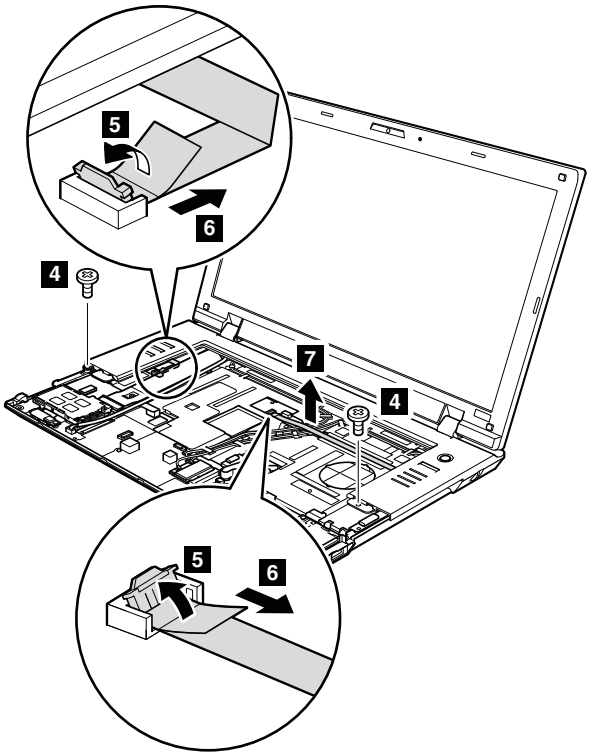

Step	Screw (quantity)	Color	Torque
4	M2 × 3 mm, wafer-head, nylon-coated (2)	Black	0.181 Nm (1.85 kgfcm)

When installing: Make sure that the connectors are attached firmly to the system board.

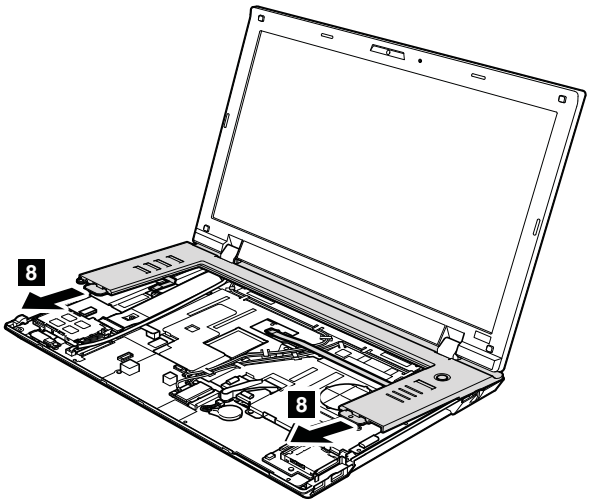

1180 LCD unit

For access, remove these FRUs in order:

- “1010 Battery pack” on page 59
- “1030 Optical drive or travel cover” on page 62
- “1100 Wireless WAN slot cover and PCI Express Mini Card for wireless WAN” on page 73
- “1110 Palm rest assembly with cables” on page 75
- “1120 PCI Express Mini Card for wireless LAN” on page 78
- “1160 Keyboard” on page 83
- “1170 Keyboard bezel” on page 86

Table 28. Removal steps of LCD unit

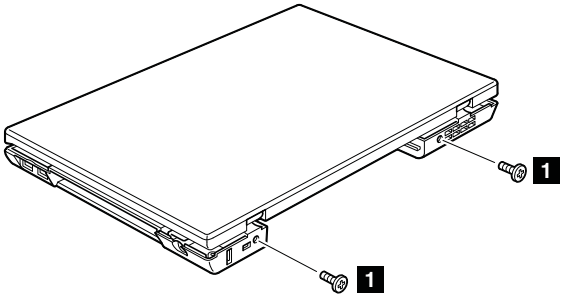

Step	Screw (quantity)	Color	Torque
1	M2.5 × 6.5 mm, wafter-head, nylon-coated (2)	Black	0.392 Nm (4 kgfcm)

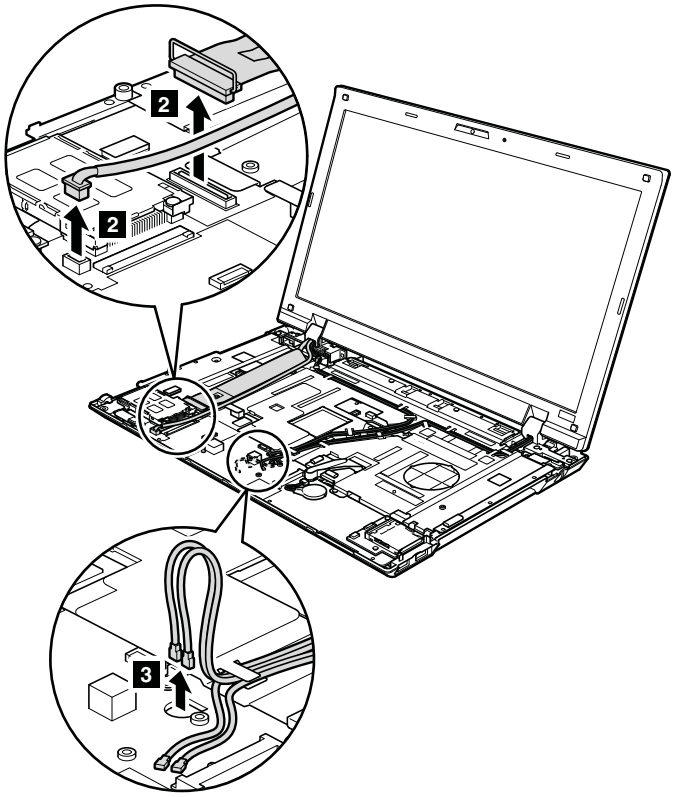

When installing: Make sure that the connectors are attached firmly to the system board.

Table 28. Removal steps of LCD unit (continued)

In step **4**, release wireless antenna cables from the cable guides.

For ThinkPad SL510, L510, and L512:

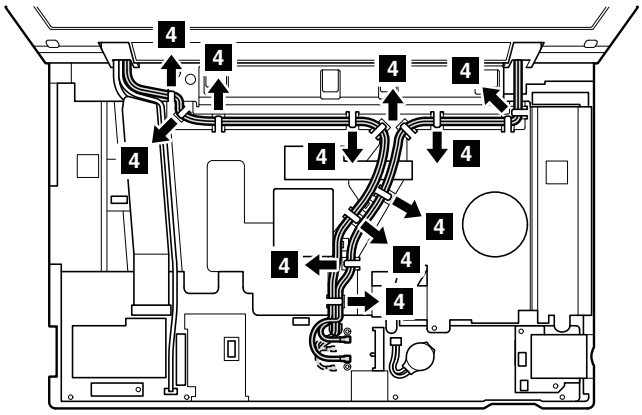

For ThinkPad SL410, L410, and L412:

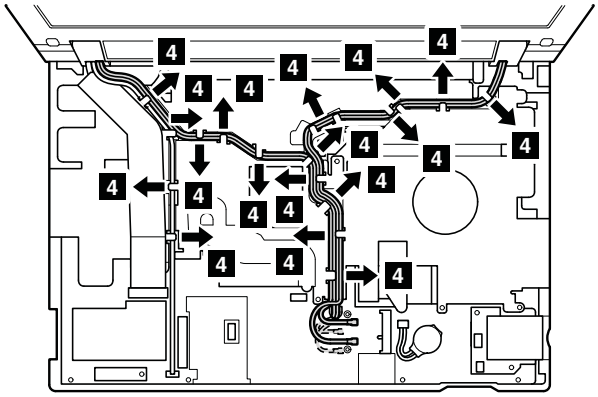

When installing: Make sure that the cables are attached to the cable guides firmly .

Attention: When you route the cables, make sure that they are not subjected to any tension. Tension could cause the cables to be damaged by the cable guides, or a wire to be broken.

Table 28. Removal steps of LCD unit (continued)

For ThinkPad SL510, L510, and L512:

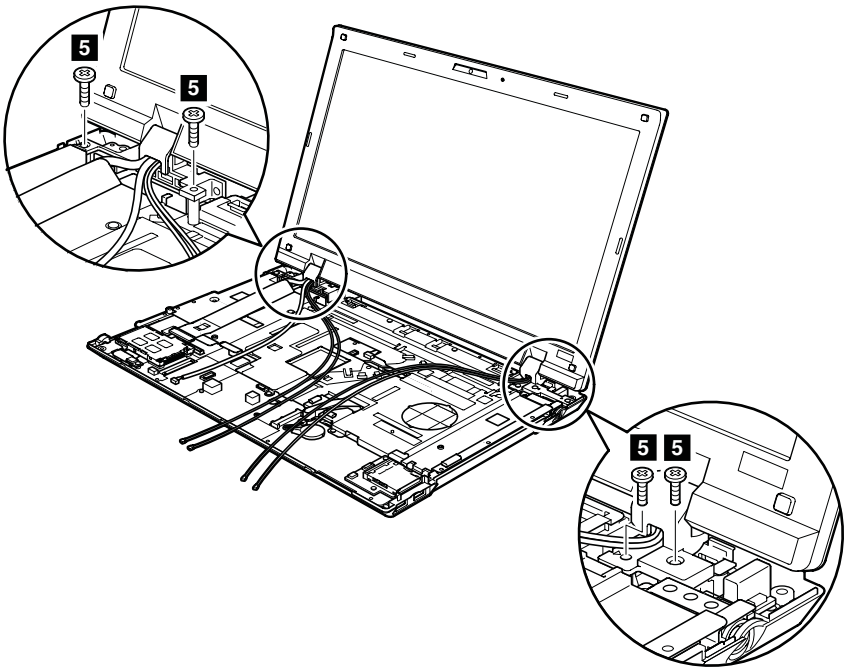

For ThinkPad SL410, L410, and L412:

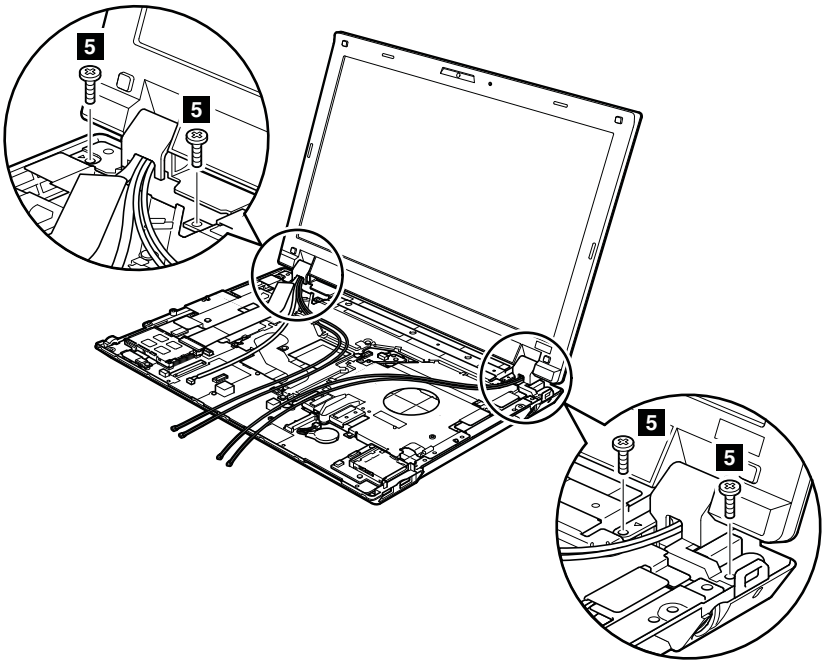

Step	Screw (quantity)	Color	Torque
5	M2.5 × 6.5 mm, wafter-head, nylon-coated (4)	Black	0.392 Nm (4 kgfcm)

Table 28. Removal steps of LCD unit (continued)

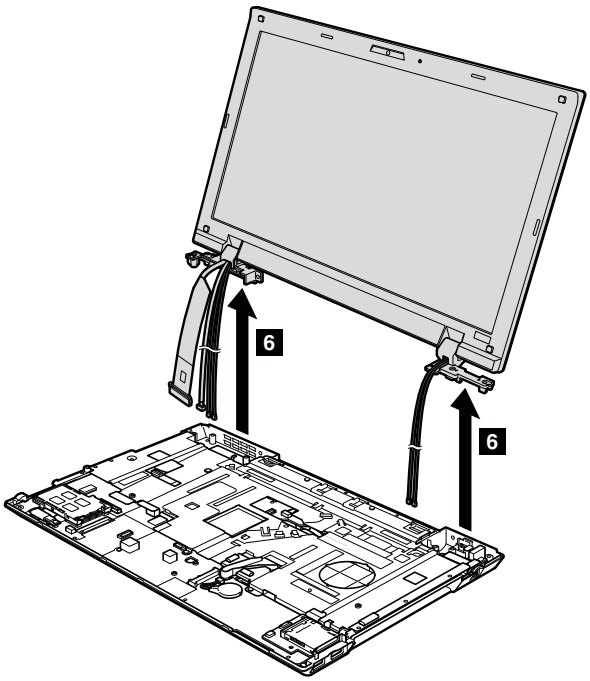

1190 Top shielding assembly

For access, remove these FRUs in order:

- “1010 Battery pack” on page 59
- “1030 Optical drive or travel cover” on page 62
- “1100 Wireless WAN slot cover and PCI Express Mini Card for wireless WAN” on page 73
- “1110 Palm rest assembly with cables” on page 75
- “1120 PCI Express Mini Card for wireless LAN” on page 78
- “1160 Keyboard” on page 83
- “1170 Keyboard bezel” on page 86
- “1180 LCD unit” on page 87

Table 29. Removal steps of top shielding assembly

For ThinkPad SL510 and L510:

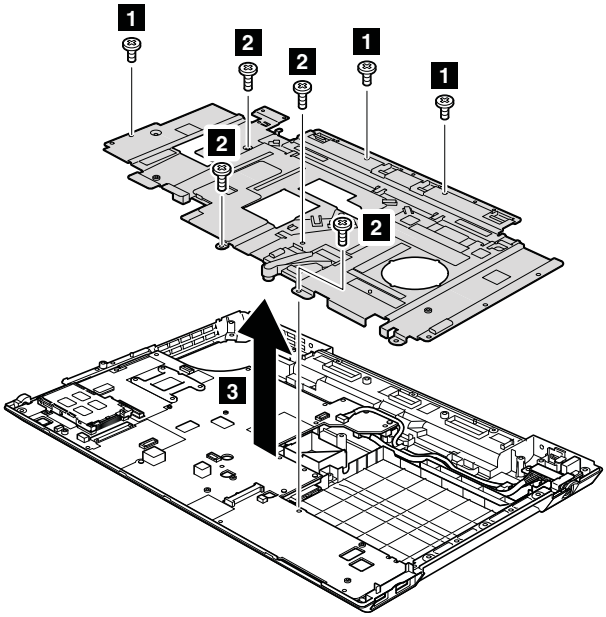

Step	Screw (quantity)	Color	Torque
1	M2 × 3 mm, wafer-head, nylon-coated (3)	Black	0.181 Nm (1.85 kgfcm)
2	M2 × 5 mm, wafer-head, nylon-coated (4)	Black	0.181 Nm (1.85 kgfcm)

For ThinkPad L512:

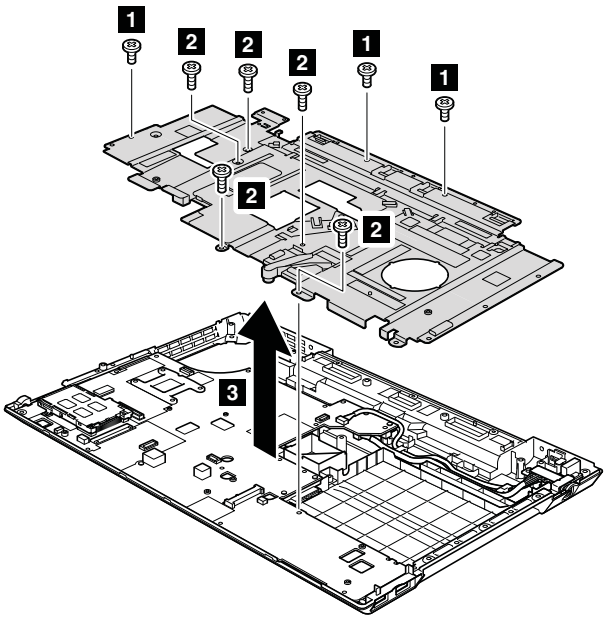

Step	Screw (quantity)	Color	Torque

Table 29. Removal steps of top shielding assembly (continued)

1	M2 × 3 mm, wafer-head, nylon-coated (3)	Black	0.181 Nm (1.85 kgfcm)
2	M2 × 5 mm, wafer-head, nylon-coated (5)	Black	0.181 Nm (1.85 kgfcm)

For ThinkPad SL410 and L410:

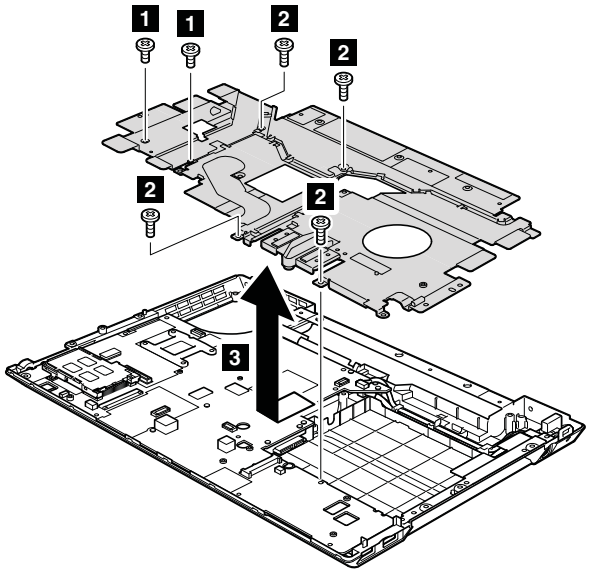

Step	Screw (quantity)	Color	Torque
1	M2 × 3 mm, wafer-head, nylon-coated (2)	Black	0.181 Nm (1.85 kgfcm)
2	M2 × 5 mm, wafer-head, nylon-coated (4)	Black	0.181 Nm (1.85 kgfcm)

Table 29. Removal steps of top shielding assembly (continued)

For ThinkPad L412:

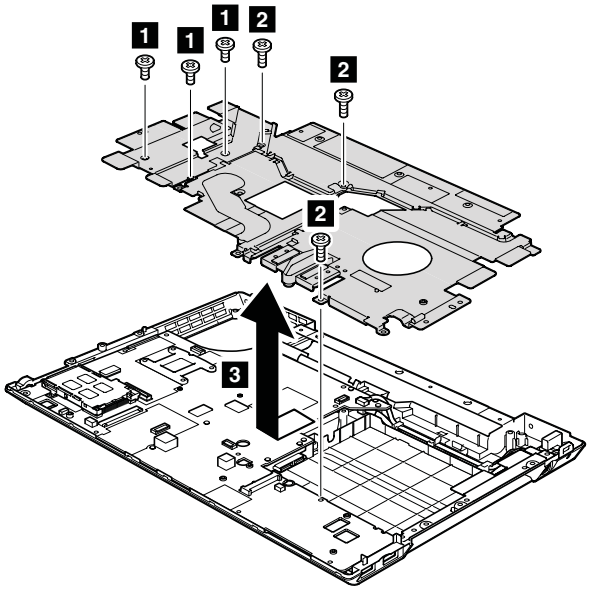

Step	Screw (quantity)	Color	Torque
1	M2 × 3 mm, wafer-head, nylon-coated (3)	Black	0.181 Nm (1.85 kgfcm)
2	M2 × 5 mm, wafer-head, nylon-coated (3)	Black	0.181 Nm (1.85 kgfcm)

1200 System board assembly

Important notices for handling the system board:

When handling the system board, bear the following in mind.

- The system board has an accelerometer, which can be broken by applying several thousands of G-forces.

  Note: Dropping a system board from a height of as little as 6 inches so that it falls flat on a hard bench can subject the accelerometer to as much as 6,000 G's of shock.
- Be careful not to drop the system board on a bench top that has a hard surface, such as metal, wood, or composite.
- If a system board is dropped, you must test it, using PC-Doctor for DOS, to make sure that the HDD Active Protection still functions (see below).

  Note: If the test shows that HDD Active Protection is not functioning, be sure to document the drop in any reject report, and replace the system board.
- Avoid rough handling of any kind.
- At every point in the process, be sure not to drop or stack the system board.
- If you put a system board down, be sure to put it only on a padded surface such as an ESD mat or conductive corrugated material.

After replacing the system board, run PC-Doctor for DOS to make sure that HDD Active Protection still functions. The procedure is as follows:

1. Place the computer on a horizontal surface.
2. Run **Diagnostics → ThinkPad Devices → HDD Active Protection Test**.

   Attention: Do *not* apply physical shock to the computer while the test is running.

For access, remove these FRUs, in order:

- “1010 Battery pack” on page 59
- “1020 ExpressCard blank bezel and Media Card blank bezel” on page 60
- “1030 Optical drive or travel cover” on page 62
- “1040 Thermal cover” on page 63
- “1050 Hard disk drive (HDD) assembly” on page 64
- “1060 DIMM” on page 65
- “1070 Fan assembly” on page 66
- “1080 CPU” on page 70
- “1090 SIM slot cover” on page 71
- “1100 Wireless WAN slot cover and PCI Express Mini Card for wireless WAN” on page 73
- “1110 Palm rest assembly with cables” on page 75
- “1120 PCI Express Mini Card for wireless LAN” on page 78
- “1130 Backup battery” on page 79
- “1140 ***Bluetooth*** daughter card (BDC-2)” on page 80
- “1150 Media Card Reader slot board and Media Card Reader cable assembly” on page 81
- “1160 Keyboard” on page 83
- “1170 Keyboard bezel” on page 86
- “1180 LCD unit” on page 87
- “1190 Top shielding assembly” on page 91

Table 30. Location of major sensitive components on the system board in ThinkPad SL410, L410, SL510, and L510

Following components soldered on the top side of the system board are extremely sensitive. When you service the system board, avoid any kind of rough handling.

a	GMCH (Integrated video chip)
b	CPU
c	ICH (I/O Controller Hub)
d	Video chip (only for discrete models)

For ThinkPad SL410 and L410 integrated models:

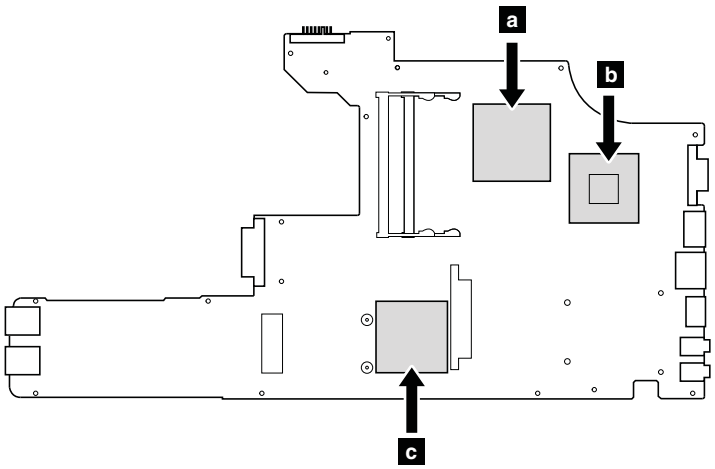

Table 30. Location of major sensitive components on the system board in ThinkPad SL410, L410, SL510, and L510 (continued)

For ThinkPad SL410 and L410 discrete models:

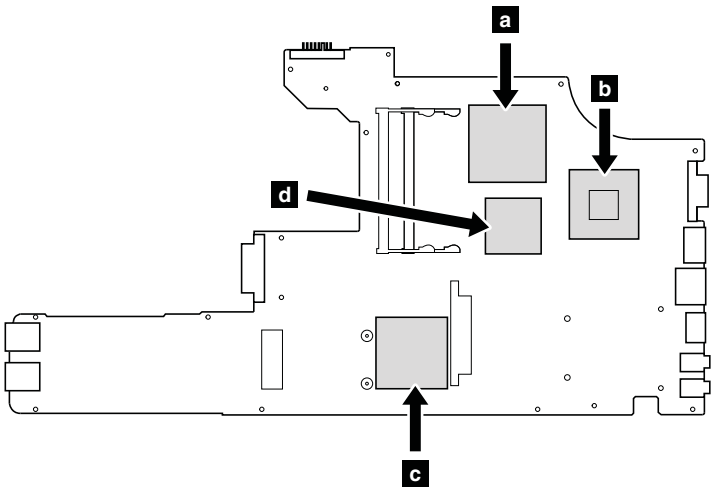

For ThinkPad SL510 and L510 integrated models:

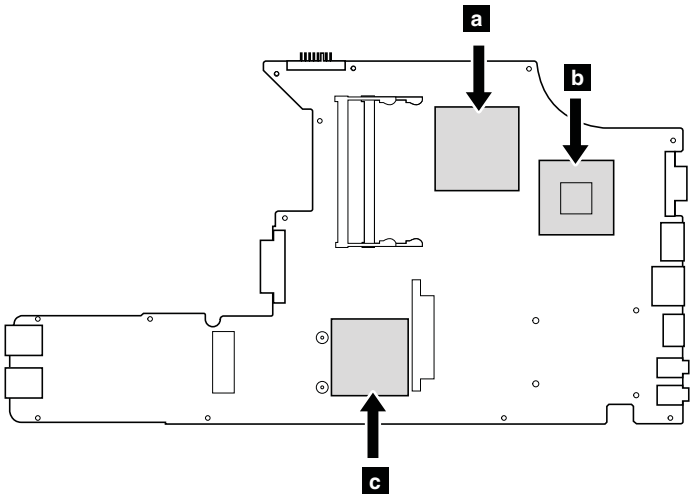

For ThinkPad SL510 and L510 discrete models:

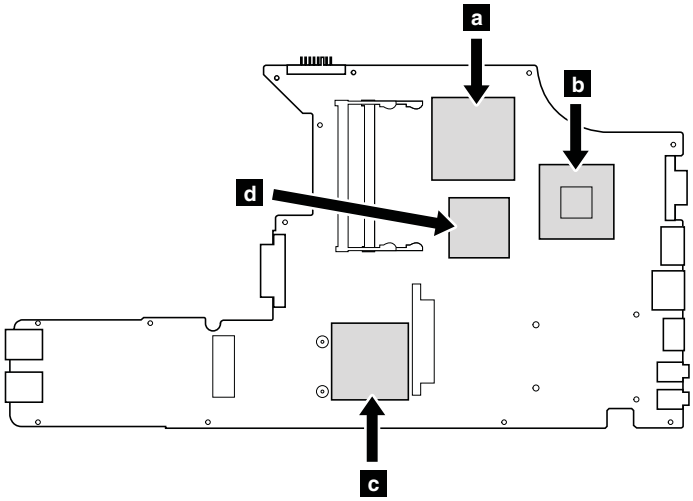

Table 31. Location of major sensitive components on the system board in ThinkPad L412 and L512

Following components soldered on the top side of the system board are extremely sensitive. When you service the system board, avoid any kind of rough handling.

a	Accelerometer chip for the HDD Active Protection System™
b	MCP (Multi Chip Package) processor
c	Video chip (only for discrete models)
d	PCH (Platform Controller Hub)

For ThinkPad L412 integrated models (top side):

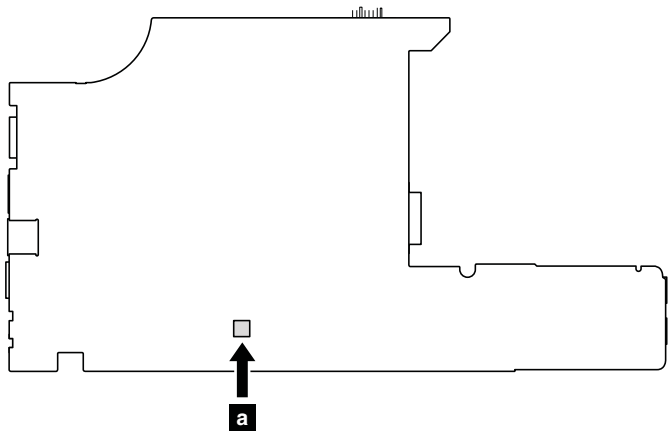

For ThinkPad L412 integrated models (bottom side):

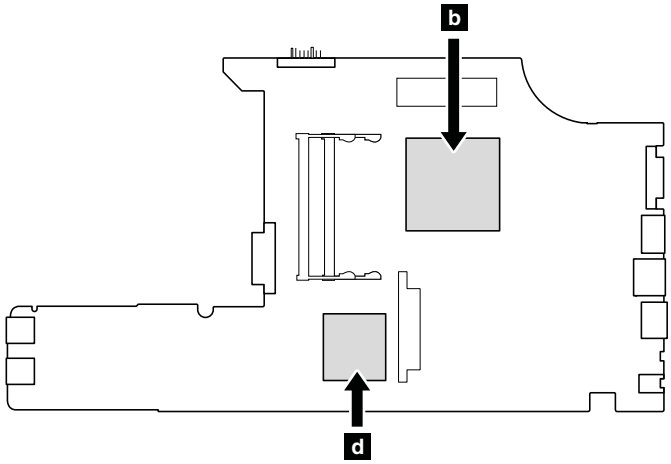

Table 31. Location of major sensitive components on the system board in ThinkPad L412 and L512 (continued)

For ThinkPad L512 integrated models (top side):

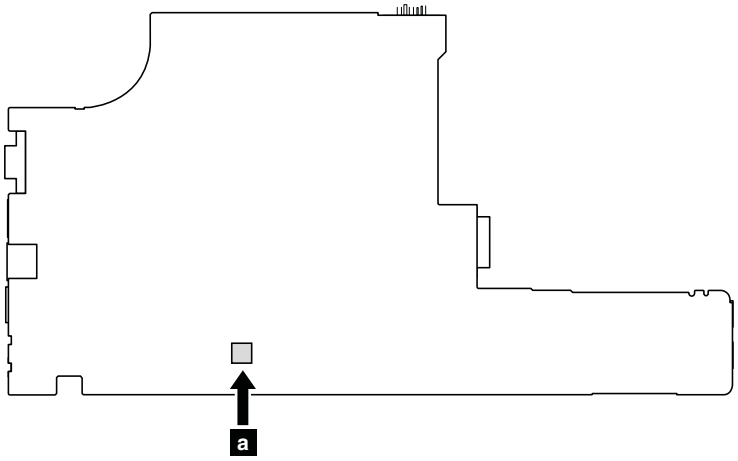

For ThinkPad L512 integrated models (bottom side):

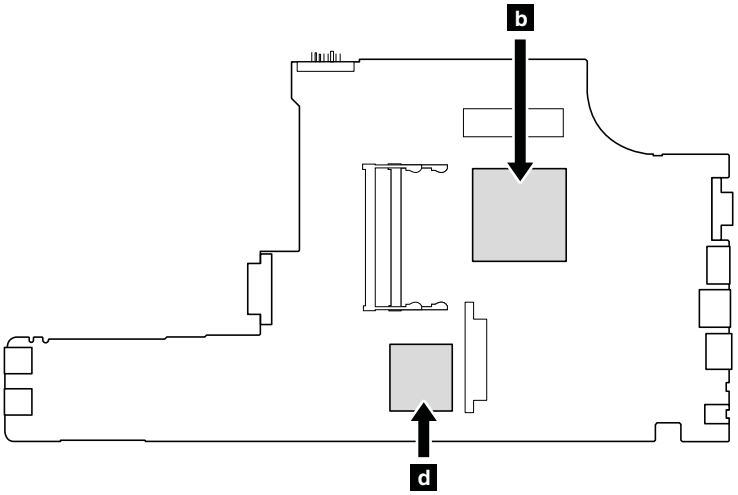

For ThinkPad L412 discrete models (top side):

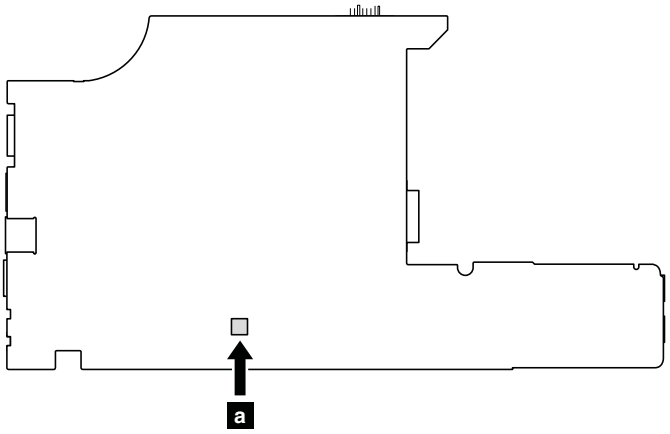

Table 31. Location of major sensitive components on the system board in ThinkPad L412 and L512 (continued)

For ThinkPad L412 discrete models (bottom side):

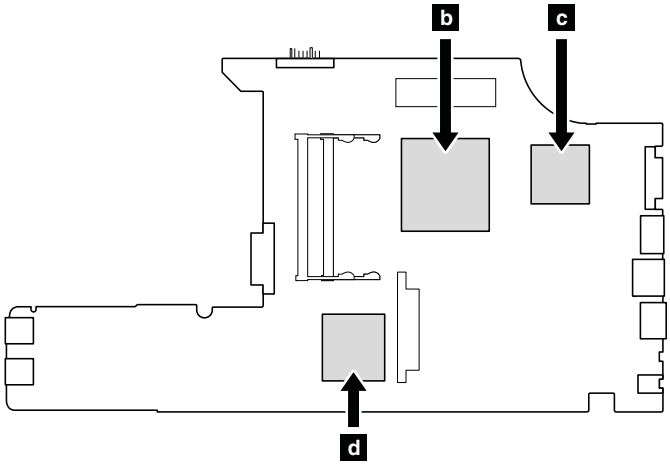

For ThinkPad L512 discrete models (top side):

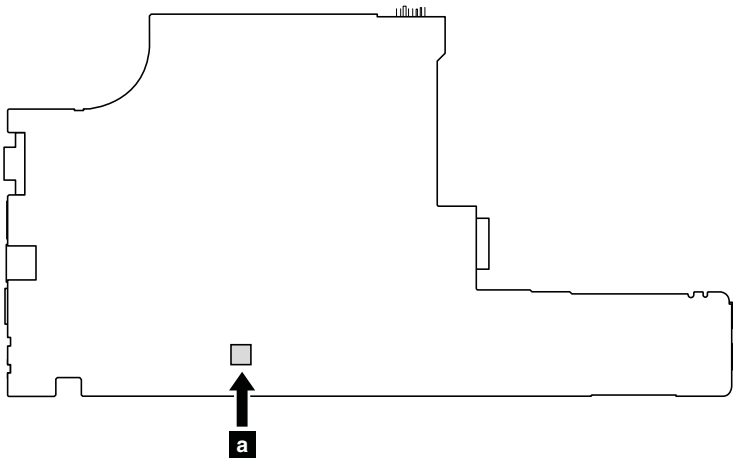

For ThinkPad L512 discrete models (bottom side):

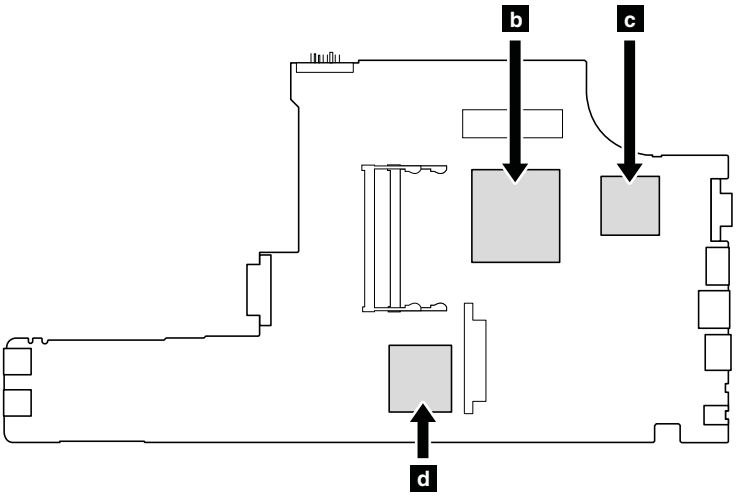

Table 32. Removal steps of system board assembly

For ThinkPad SL510, L510, and L512:

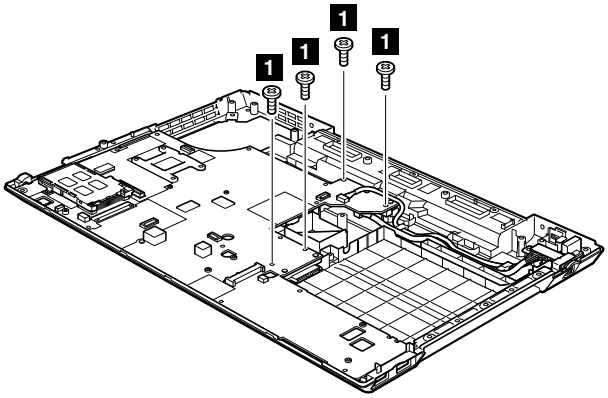

Step	Screw (quantity)	Color	Torque
1	M2 × 5 mm, wafer-head, nylon-coated (4)	Black	0.181 Nm (1.85 kgfcm)

For ThinkPad SL410, L410, and L412:

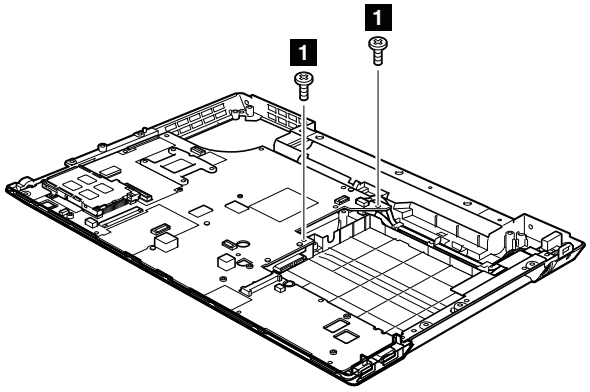

Step	Screw (quantity)	Color	Torque
1	M2 × 5 mm, wafer-head, nylon-coated (2)	Black	0.181 Nm (1.85 kgfcm)

Table 32. Removal steps of system board assembly (continued)

For ThinkPad SL510, L510, and L512:

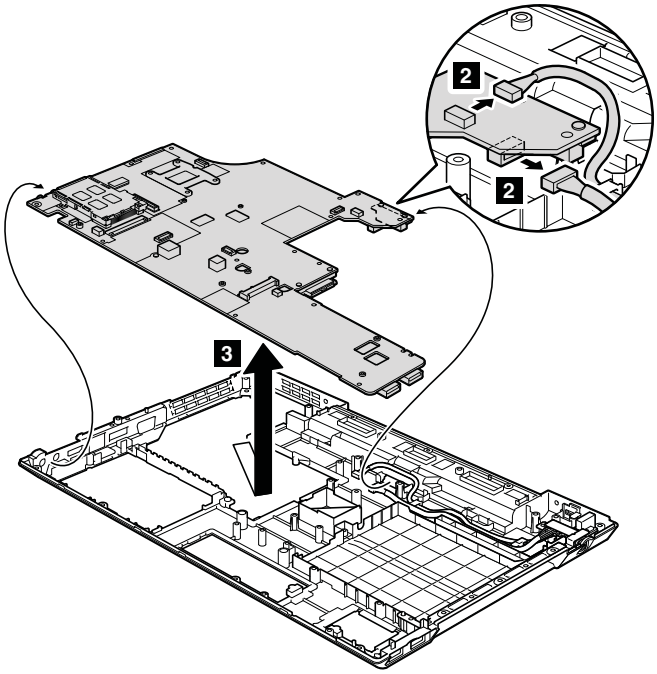

For ThinkPad SL410, L410, and L412:

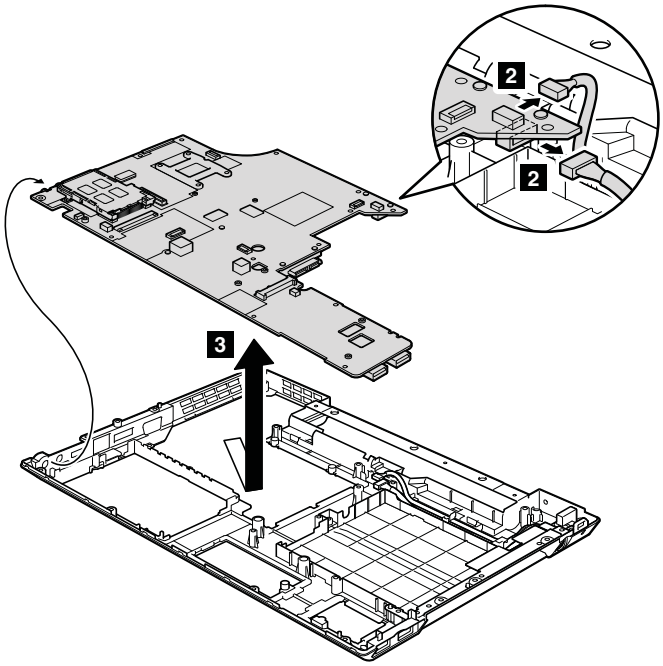

When installing: Make sure that the connectors are attached firmly to the system board.

1210 USB connector board and USB cable assembly

For access, remove these FRUs in order:

- “1010 Battery pack” on page 59
- “1040 Thermal cover” on page 63
- “1050 Hard disk drive (HDD) assembly” on page 64
- “1100 Wireless WAN slot cover and PCI Express Mini Card for wireless WAN” on page 73
- “1110 Palm rest assembly with cables” on page 75
- “1120 PCI Express Mini Card for wireless LAN” on page 78
- “1150 Media Card Reader slot board and Media Card Reader cable assembly” on page 81
- “1160 Keyboard” on page 83
- “1170 Keyboard bezel” on page 86
- “1180 LCD unit” on page 87
- “1190 Top shielding assembly” on page 91

Table 33. Removal steps of USB connector board and USB cable assembly

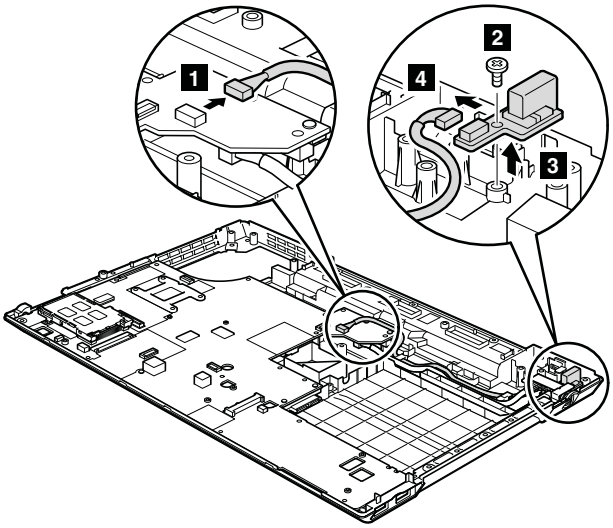

Make sure that the connectors are attached firmly.

Step	Screw (quantity)	Color	Torque
2	M2 × 3 mm, wafer-head, nylon-coated (1)	Black	0.181 Nm (1.85 kgfcm)

Table 33. Removal steps of USB connector board and USB cable assembly (continued)

Cable routing: Route the USB cable assembly as shown in these figures.

For ThinkPad SL510, L510, and L512:

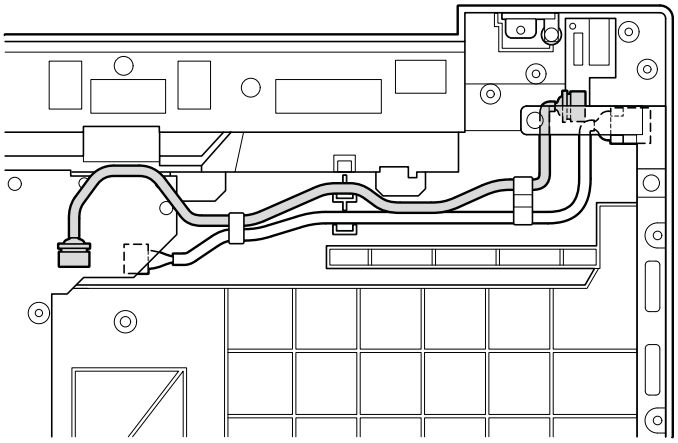

For ThinkPad SL410, L410, and L412:

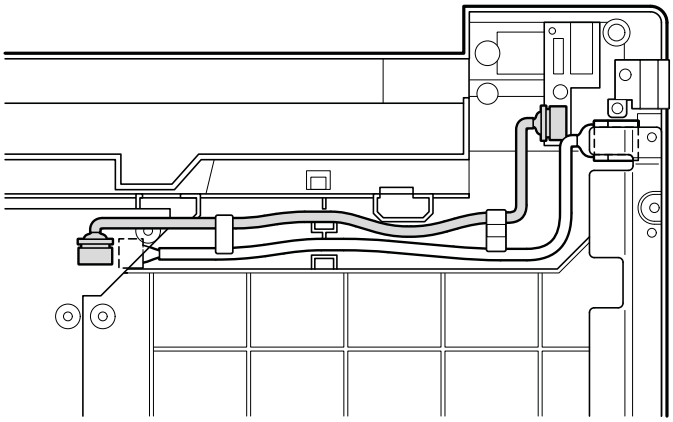

1220 DC-in cable and base cover

For access, remove these FRUs in order:

- “1010 Battery pack” on page 59
- “1020 ExpressCard blank bezel and Media Card blank bezel” on page 60
- “1030 Optical drive or travel cover” on page 62
- “1040 Thermal cover” on page 63
- “1050 Hard disk drive (HDD) assembly” on page 64
- “1060 DIMM” on page 65
- “1070 Fan assembly” on page 66
- “1100 Wireless WAN slot cover and PCI Express Mini Card for wireless WAN” on page 73
- “1110 Palm rest assembly with cables” on page 75
- “1120 PCI Express Mini Card for wireless LAN” on page 78
- “1150 Media Card Reader slot board and Media Card Reader cable assembly” on page 81
- “1160 Keyboard” on page 83
- “1170 Keyboard bezel” on page 86
- “1180 LCD unit” on page 87
- “1190 Top shielding assembly” on page 91
- “1200 System board assembly” on page 94

Table 34. Removal steps of DC-in cable and base cover

For ThinkPad SL510, L510, and L512:

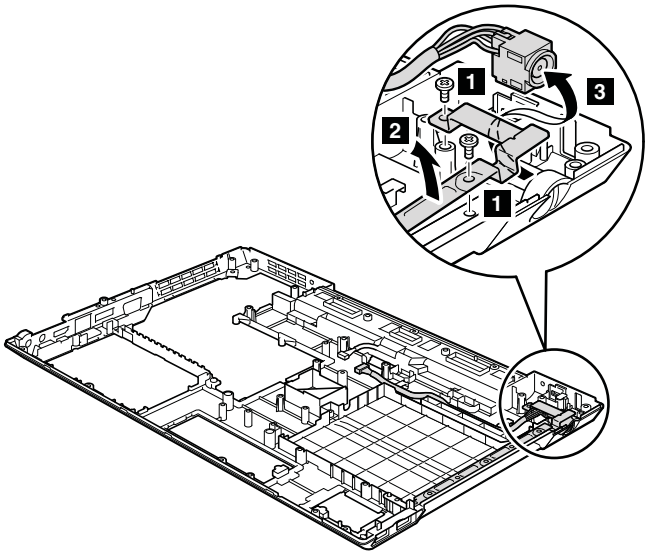

Step	Screw (quantity)	Color	Torque
1	M2 × 3 mm, wafer-head, nylon-coated (2)	Black	0.181 Nm (1.85 kgfcm)

For ThinkPad SL410, L410, and L412:

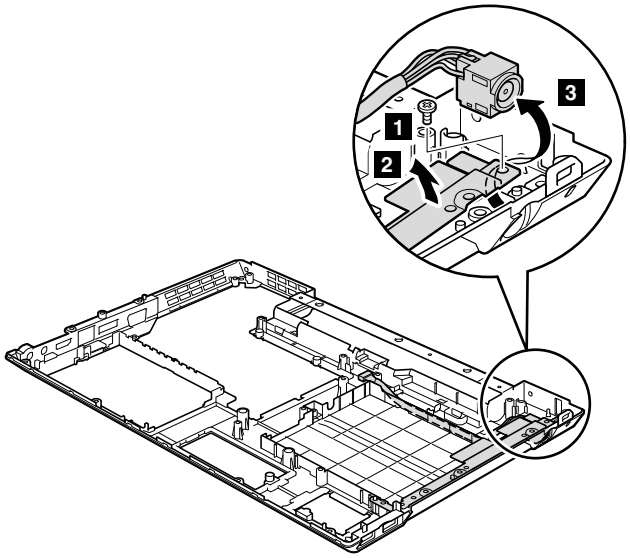

Step	Screw (quantity)	Color	Torque
1	M2 × 5 mm, wafer-head, nylon-coated (1)	Black	0.181 Nm (1.85 kgfcm)

Table 34. Removal steps of DC-in cable and base cover (continued)

Cable routing: Route the cable as shown in these figures.

For ThinkPad SL510, L510, and L512:

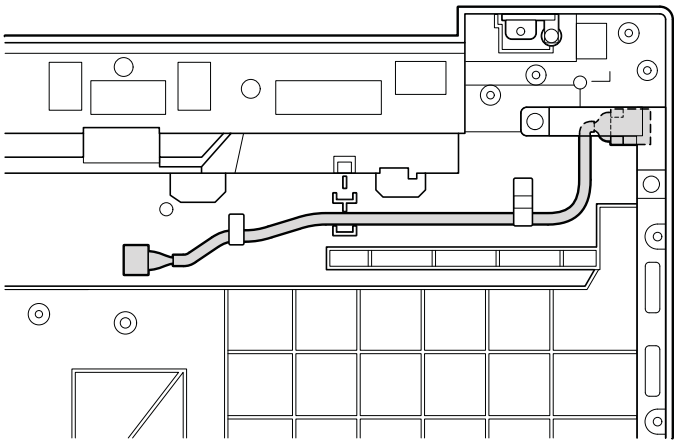

For ThinkPad SL410, L410, and L412:

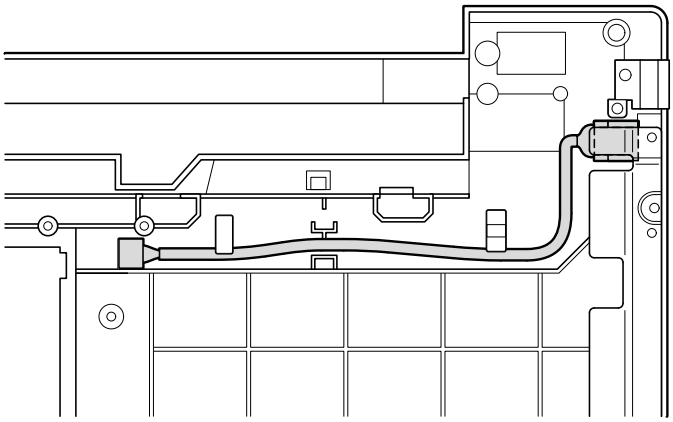

Note: Applying labels to the base cover

The new base cover FRU is shipped with a kit containing labels of several kinds. When you replace the base cover, you need to apply the following labels:

4 Battery word label

6 Homologation label

Following labels need to be peeled off from the old base cover, and need to be put on the new base cover.

1 MAC address label

2 Wireless WAN label

3 Windows license label (COA)

5 Serial number label

7 FCC label

8 SIM ICC ID label

9 Indonesia Postel label

10 Brazil Anatel BG label

11 SIRIM label

12 Israel label (SIM model)

13 Brazil Anatel *Bluetooth* label

14 Indonesia Rating label or Non Encryption label

For some models, you also need to apply one or two FCC labels. Check the old base cover; if it has one or two FCC labels, find duplicates of them in the label kit and apply them to the new base cover.

For the location of each label, refer the following figures:

For ThinkPad SL410, L410, and L412:

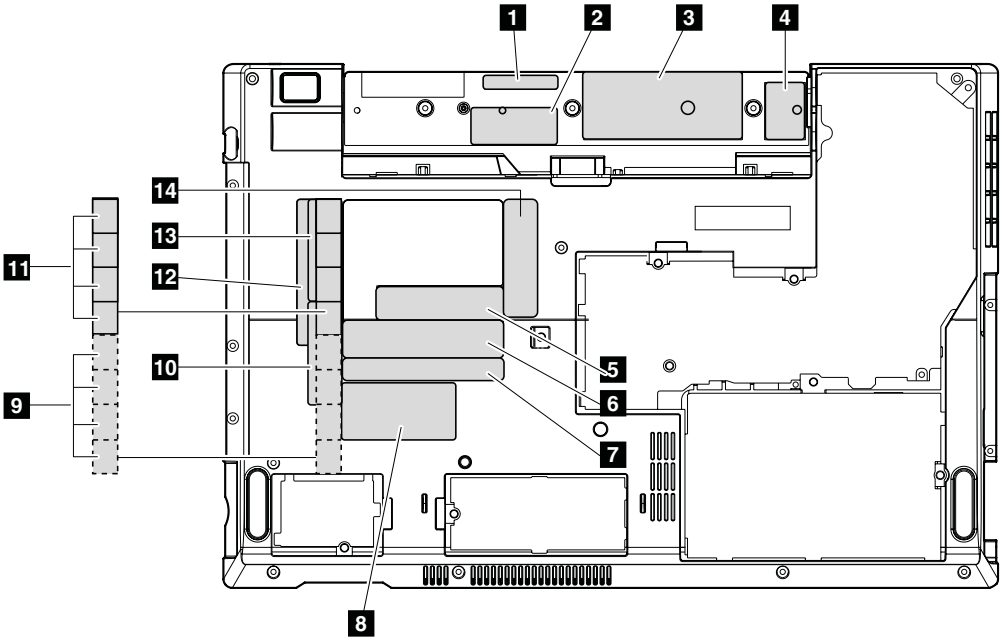

For ThinkPad SL510, L510, and L512:

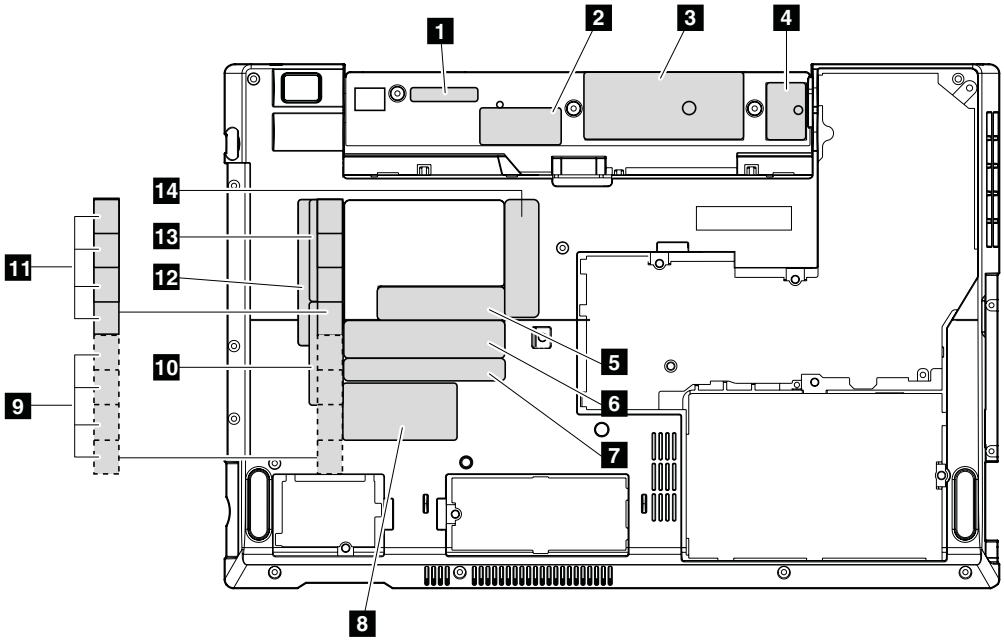

2010 LCD front bezel

For access, remove these FRUs in order:

- “1010 Battery pack” on page 59
- “1100 Wireless WAN slot cover and PCI Express Mini Card for wireless WAN” on page 73
- “1110 Palm rest assembly with cables” on page 75
- “1120 PCI Express Mini Card for wireless LAN” on page 78
- “1160 Keyboard” on page 83
- “1170 Keyboard bezel” on page 86
- “1180 LCD unit” on page 87

Table 35. Removal steps of LCD front bezel

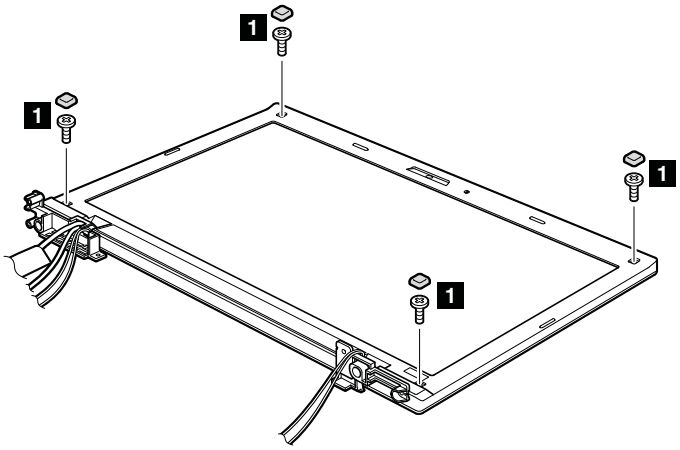

Step	Screw cap	Screw (quantity)	Color	Torque
1	☐	M2 × 5 mm, wafer-head, nylon-coated (4)	Black	0.181 Nm (1.85 kgfcm)

Table 35. Removal steps of LCD front bezel (continued)

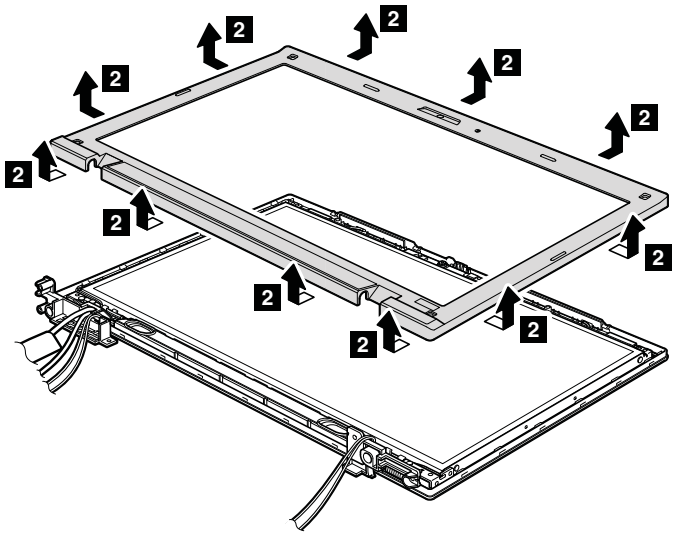

When installing: Make sure that all the latches are attached firmly. Then secure the bezel with the screws.

2020 Speaker assembly

For access, remove these FRUs in order:

- "1010 Battery pack" on page 59
- "1100 Wireless WAN slot cover and PCI Express Mini Card for wireless WAN" on page 73
- "1110 Palm rest assembly with cables" on page 75
- "1120 PCI Express Mini Card for wireless LAN" on page 78
- "1160 Keyboard" on page 83
- "1170 Keyboard bezel" on page 86
- "1180 LCD unit" on page 87
- "2010 LCD front bezel" on page 107

Table 36. Removal steps of speaker assembly

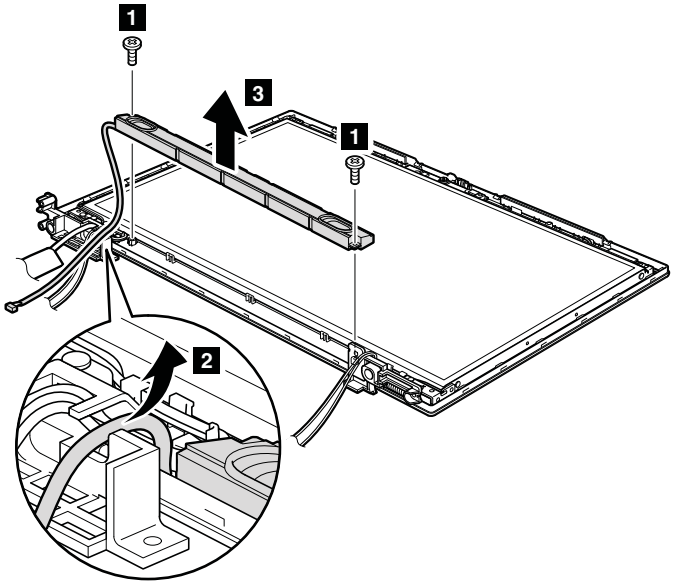

Table 36. Removal steps of speaker assembly (continued)

Step	Screw (quantity)	Color	Torque
1	M2 × 3 mm, wafer-head, nylon-coated (2)	Black	0.181 Nm (1.85 kgfcm)

2030 Integrated camera

For access, remove these FRUs, in order:

- “1010 Battery pack” on page 59
- “1100 Wireless WAN slot cover and PCI Express Mini Card for wireless WAN” on page 73
- “1110 Palm rest assembly with cables” on page 75
- “1120 PCI Express Mini Card for wireless LAN” on page 78
- “1160 Keyboard” on page 83
- “1170 Keyboard bezel” on page 86
- “1180 LCD unit” on page 87
- “2010 LCD front bezel” on page 107
- “2020 Speaker assembly” on page 108

Table 37. Removal steps of integrated camera

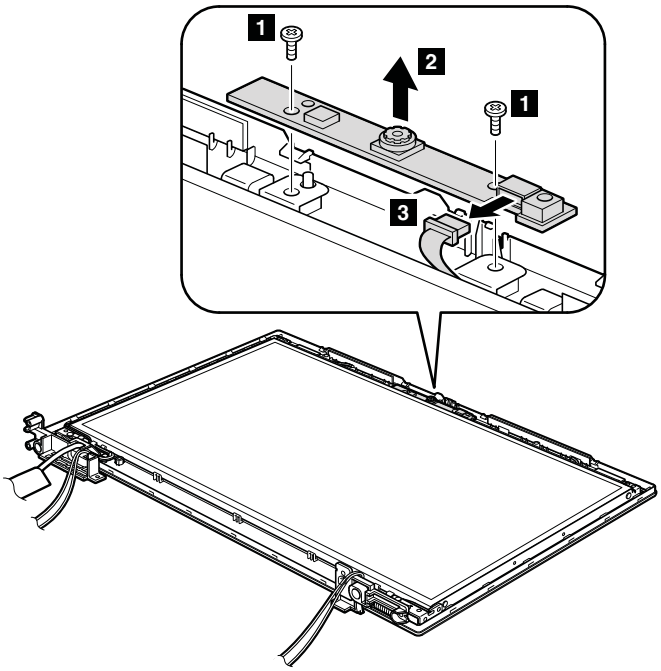

Step	Screw (quantity)	Color	Torque
1	M2 × 3 mm, wafer-head, nylon-coated (2)	Black	0.181 Nm (1.85 kgfcm)

When installing: Make sure that the connector is attached firmly.

2040 Antenna assembly

For access, remove these FRUs in order:

- “1010 Battery pack” on page 59
- “1100 Wireless WAN slot cover and PCI Express Mini Card for wireless WAN” on page 73
- “1110 Palm rest assembly with cables” on page 75
- “1120 PCI Express Mini Card for wireless LAN” on page 78
- “1160 Keyboard” on page 83
- “1170 Keyboard bezel” on page 86
- “1180 LCD unit” on page 87
- “2010 LCD front bezel” on page 107
- “2020 Speaker assembly” on page 108
- “2030 Integrated camera” on page 109

Table 38. Removal steps of antenna assembly

Release the antenna cables from the cable guides of the LCD rear cover assembly and from the hinges.

For ThinkPad SL510, L510, L512:

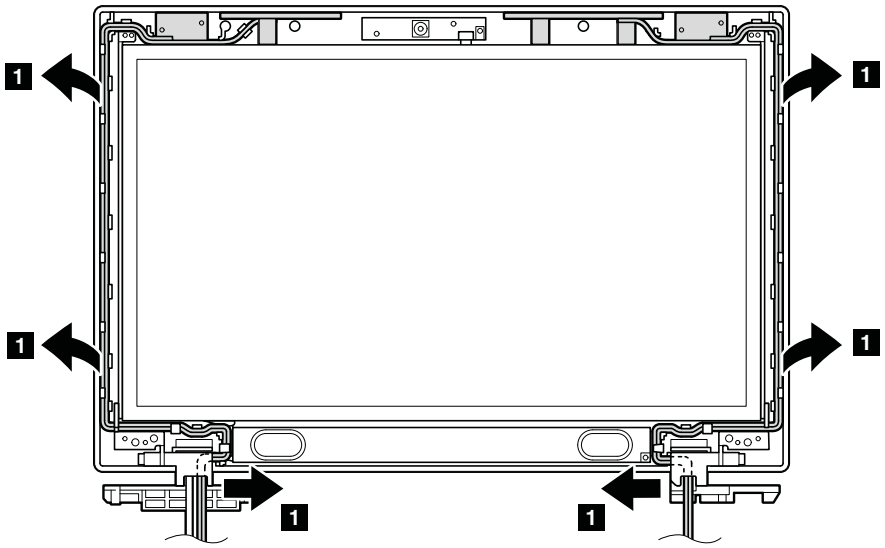

When installing: Route the cables as shown in this figure. When you route the cables, make sure that they are not subjected to any tension. Tension could cause the cables to be damaged by the cable guides, or a wire to be broken.

For ThinkPad SL410, L410, and L412:

Table 38. Removal steps of antenna assembly (continued)

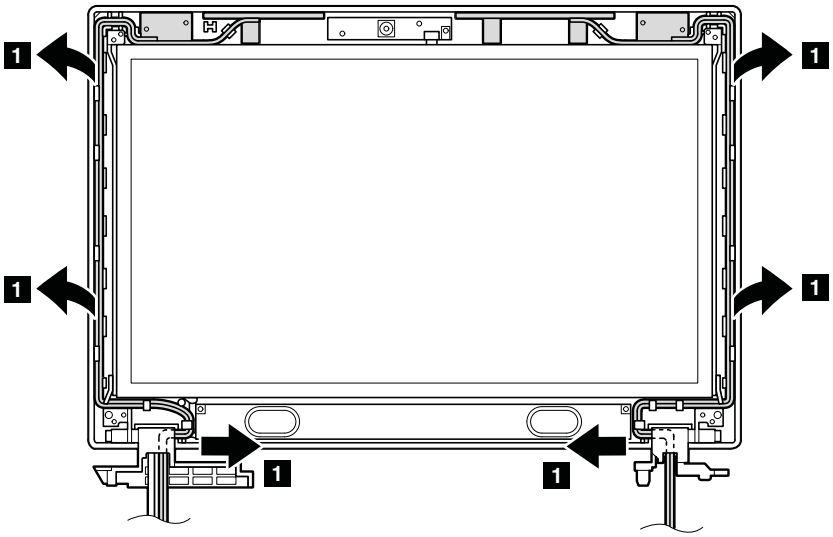

When installing: Route the cables as shown in this figure. When you route the cables, make sure that they are not subjected to any tension. Tension could cause the cables to be damaged by the cable guides, or a wire to be broken.

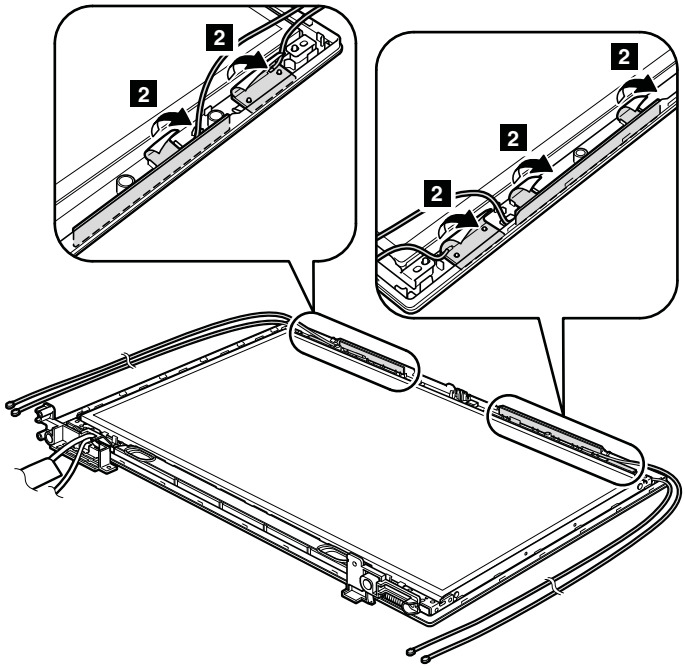

2050 Hinges, LCD panel, LCD cable, and LCD rear cover assembly

For access, remove these FRUs, in order:

- “1010 Battery pack” on page 59
- “1100 Wireless WAN slot cover and PCI Express Mini Card for wireless WAN” on page 73
- “1110 Palm rest assembly with cables” on page 75
- “1120 PCI Express Mini Card for wireless LAN” on page 78
- “1160 Keyboard” on page 83
- “1170 Keyboard bezel” on page 86

- “1180 LCD unit” on page 87
- “2010 LCD front bezel” on page 107
- “2020 Speaker assembly” on page 108
- “2030 Integrated camera” on page 109
- “2040 Antenna assembly” on page 110

Table 39. Removal steps of hinges, LCD panel, LCD cable, and LCD rear cover assembly

For ThinkPad SL510, L510, and L512:

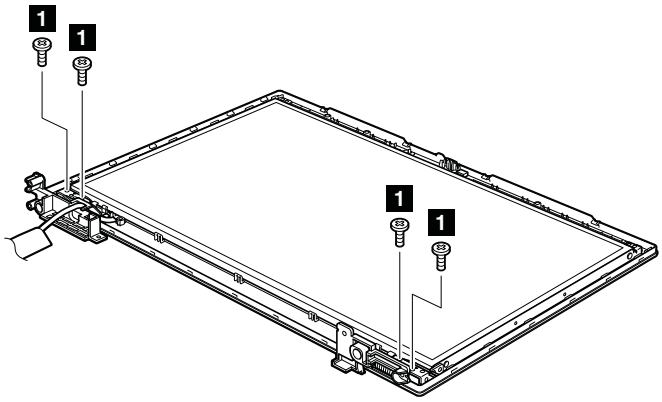

Step	Screw (quantity)	Color	Torque
1	M2 × 5 mm, wafer-head, nylon-coated (4)	Black	0.181 Nm (1.85 kgfcm)

For ThinkPad SL410, L410, and L412:

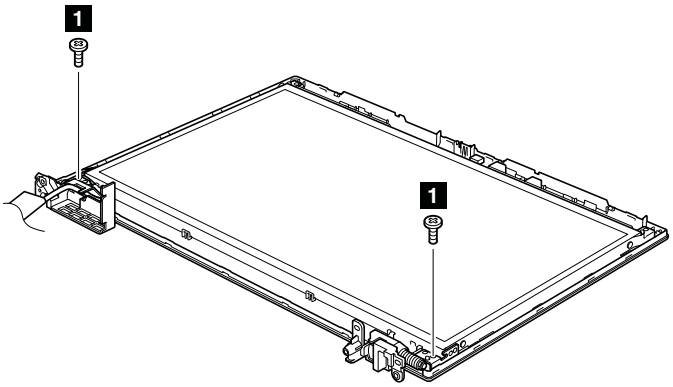

Step	Screw (quantity)	Color	Torque
1	M2 × 5 mm, wafer-head, nylon-coated (2)	Black	0.181 Nm (1.85 kgfcm)

Table 39. Removal steps of hinges, LCD panel, LCD cable, and LCD rear cover assembly (continued)

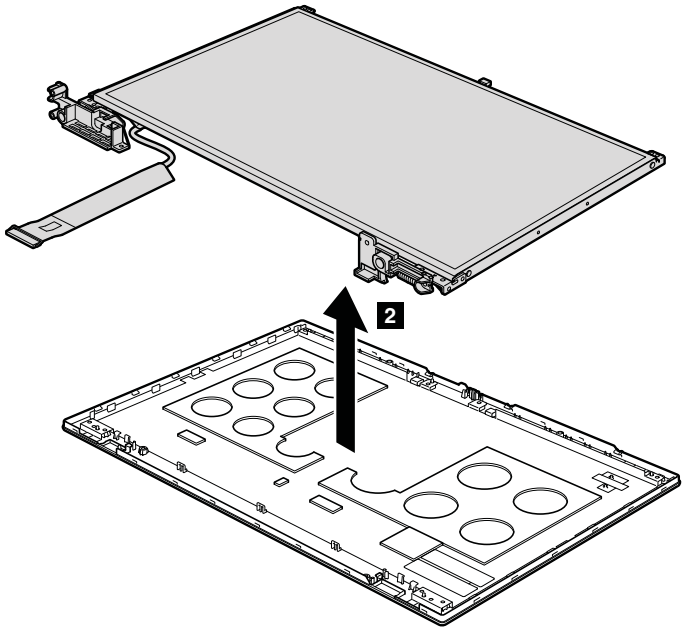

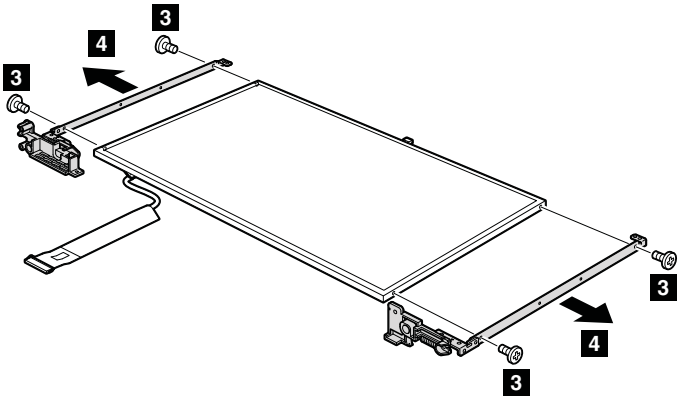

Step	Screw (quantity)	Color	Torque
3	M2 × 3 mm, small-head, nylon-coated (4)	Black	0.181 Nm (1.85 kgfcm)

Table 39. Removal steps of hinges, LCD panel, LCD cable, and LCD rear cover assembly (continued)

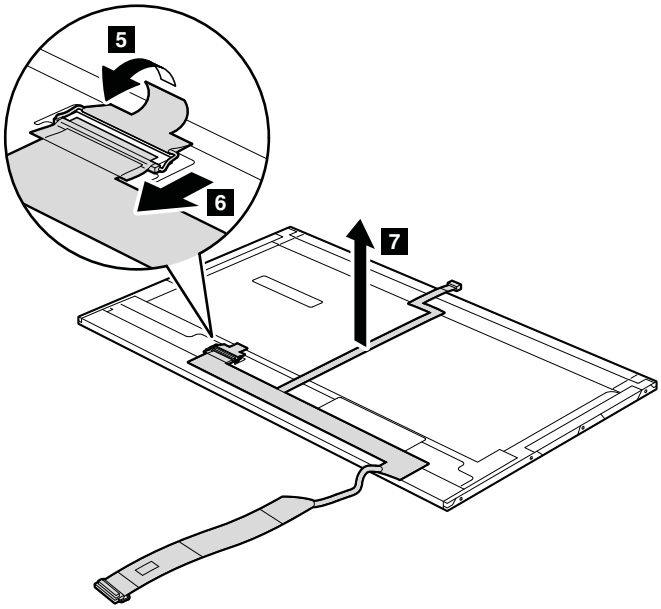

When installing: Make sure that the LCD connector is attached firmly.

Chapter 9. Locations

This chapter presents the location of ThinkPad SL410, L410, L412, SL510, L510, and L512 features and hardware.

Front view

1. Integrated camera
2. Built-in microphone
3. Built-in stereo speakers
4. Power switch
5. ac power connector
6. ThinkVantage button
7. System status indicators

   Note: For the description of each indicator, see Chapter 5 “Status indicators” on page 49.
8. Optical drive or travel cover
9. Media Card reader
10. Universal serial bus (USB) connectors
11. Wireless radio switch
12. Power status indicators
    Note: For the description of each indicator, see Chapter 5 “Status indicators” on page 49.
13. Fingerprint reader (for some models)
14. Touch pad buttons
15. Touch pad
16. TrackPoint buttons
17. TrackPoint pointing stick
18. UltraNav

© Copyright Lenovo 2009, 2011

19 Volume control buttons

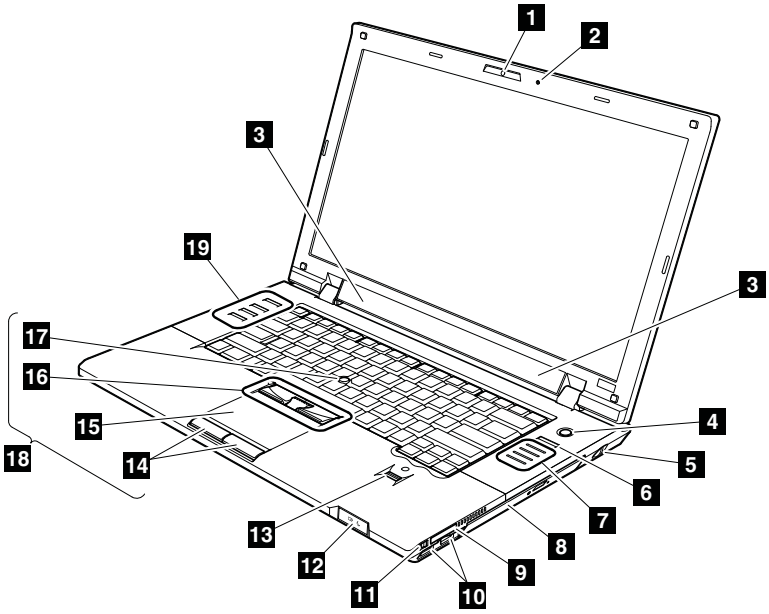

Rear view

1 Stereo headphone jack or Combo audio jack

2 Microphone jack for ThinkPad SL410, L410, SL520, and L510

3 HDMI port or DisplayPort connector

4 RJ-45 (Ethernet) connector

5 eSATA/USB combo connector

6 External monitor connector

7 Security keyhole

Note: In some models, the security keyhole is located on the right side of the computer.

8 USB connector for ThinkPad SL410, L410, SL520, and L510
Always on USB connector for ThinkPad L412 and L512

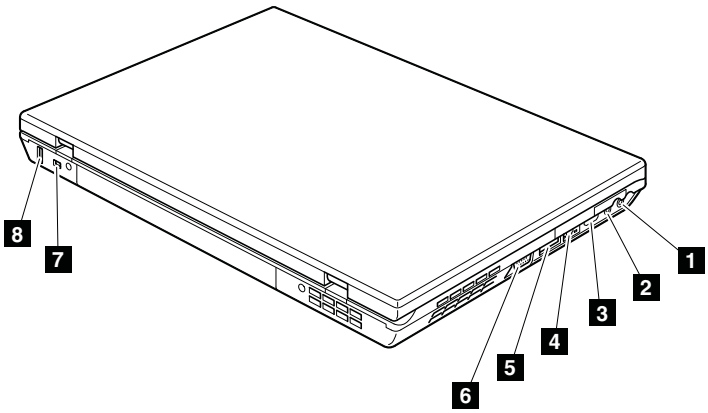

Bottom view

1. Battery pack
2. Battery pack latch
3. Docking connector (for some models)
4. Thermal slot (DIMM, hard disk drive, fan assembly)
5. ExpressCard slot
6. Wireless WAN card slot
7. SIM slot

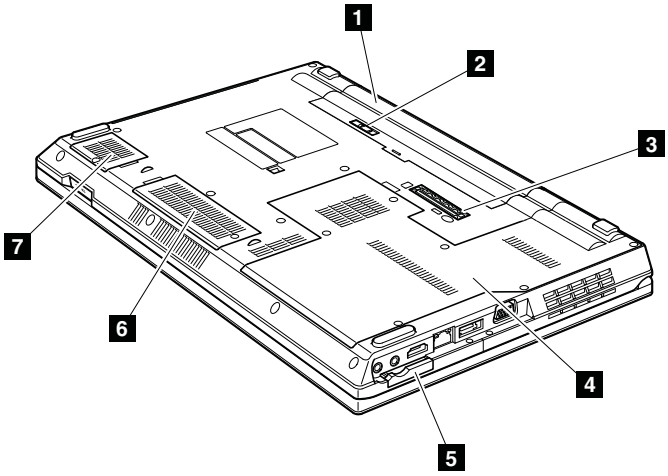

Chapter 10. Parts list

This chapter contains following lists of the service parts.

- “Overall” on page 120
- “LCD FRUs” on page 230
- “Keyboard” on page 252
- “Miscellaneous parts” on page 254
- “AC power adapters” on page 255
- “Power cords” on page 256
- “Recovery discs” on page 257
- “Common service tools” on page 271

Notes:

- Each FRU is available for all types or models, unless specific types or models are specified.
- FRU with specific models listed and described as xxU (where U is an example of a country designator) should be used for all models ending in U.
- FRU with specific models listed and described as 3Dx (where 3D is an example of a unique configuration) should be used for all of these models, unless specific country or region designator is specified.
- A CRU (customer replaceable unit) is identified by a single asterisk (*) or two asterisks (**) in the CRU ID column. An N in the CRU ID column means that the part is not a CRU. A single asterisk (*) means that the part is a Self-service CRU; two asterisks (**) means that the part is an Optional-service CRU.ThinkPad computers contain the following types of CRUs:

  Self-service CRUs

  These CRUs unplug or are held by no more than two screws. Examples of these types of CRUs include an ac power adapter, a power cord, a battery, and a hard disk drive. Other Self-service CRUs depending on product design may include a memory, a wireless card, a keyboard, and a palm rest with finger print reader and touchpad.

  Optional-service CRUs

  These CRUs are isolated parts within the computer that are concealed by an access panel that is typically secured by more than two screws. Once the access panel is removed, the specific CRU is visible.

- FRUs marked with OP are available as options.

© Copyright Lenovo 2009, 2011

Overall

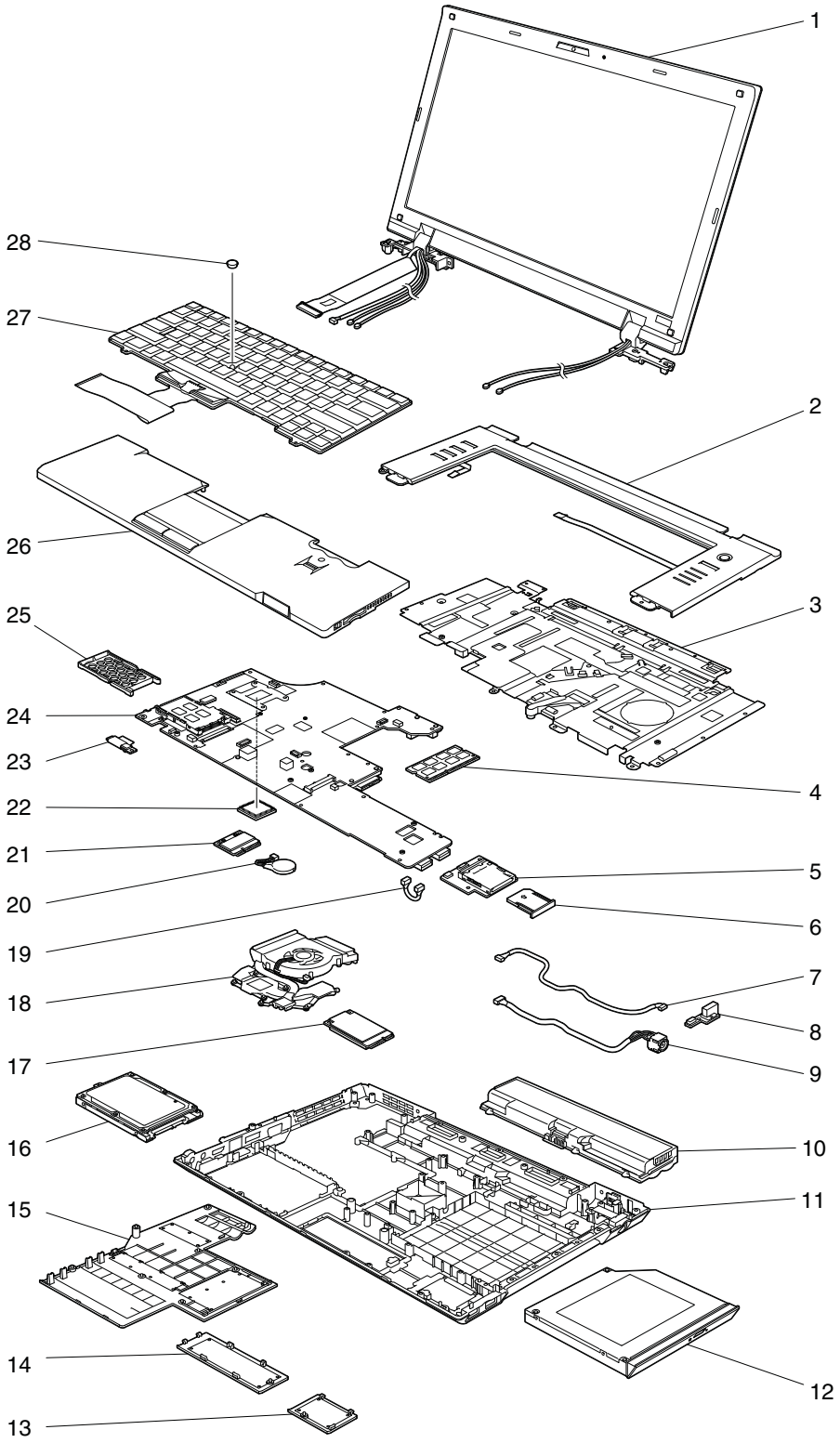

Table 40. Parts list—Overall

No.	FRU (Overall)	FRU no.	CRU ID
1	LCD unit (see “LCD FRUs” on page 230.)		
2	Keyboard bezel assembly for SL410, L410, and L412	60Y4138	N
2	Keyboard bezel assembly for SL410 and L410, Texture	04W0371	N
2	Keyboard bezel assembly for SL510, L510, and L512	60Y4140	N
2	Keyboard bezel assembly for SL510 and L510, Texture	04W0372	N
3	Top shielding assembly for SL410 and L410	60Y4359	N
3	Top shielding assembly for L412	60Y5025	N
3	Top shielding assembly for SL510 and L510	60Y4360	N
3	Top shielding assembly for L512	75Y4790	N
4	1-GB DDR3-1067 SDRAM SO-DIMM (PC3-8500) card • 0616-CTO • 2842-CTO, 24x, 29x, 2Ex, 33x, 36x, 37x, 39x, 3Dx, 3Hx, 4Gx, 4Ux, 4Yx, 59x, 5Fx, 5Hx, 5Kx, 5Vx, 5Xx, 66x, 68x, 6Cx, 6Ex, 6Px, 6Rx, 6Vx, 6Xx, 7Fx, 7Gx, 7Jx, 7Sx, 7Xx, 87x, 88x, 8Ex, 8Fx, 8Mx, 8Nx, 8Sx, 8Tx, 92x, 93x, 9Ax, 9Bx, 9Jx, 9Kx, 9Sx, 9Tx, A2x, A3x, BCx, BDx, BEx, BFx, CNx, DMx, DTx, DUx, DXx, DYx, DZx, EBx, EMx, EYx, F8x, H6x, J5x, J6x, J7x, J8x, JEx, JGx, K4x, K5x, K7x, KEx, KGx, KXx, L2x, L3x, L4x, L7x • 2847-CTO, 24x, 26x, 29x, 2Ax, 2Bx, 2Dx, 2Gx, 2Hx, 2Mx, 2Nx, 2Rx, 2Ux, 2Vx, 2Wx, 2Yx, 37x, 38x, 3Dx, 3Ex, 3Kx, 3Nx, 3Px, 42x, 43x, 4Ax, 4Sx, 4Ux, 4Wx, 52x, 53x, 58x, 59x, 5Hx, 5Kx, 5Ux, 5Wx, 6Cx, 6Dx, 6Hx, 7Bx, 7Cx, 7Jx, 7Zx, 89x, 8Ax, 8Bx, 8Cx, 8Hx, 8Jx, 8Ux, 8Vx, 8Zx, 97x, 98x, 9Cx, 9Dx, 9Hx, 9Jx, 9Wx, 9Xx, 9Zx, A6x, A8x, ALx, AMx, B6x, BAx, BBx, CHx, CKx, CLx, CVx, CWx, D2x, D4x, DBx, Q3x, Q4x, Q9x, QAx, QDx, QFx, QHx, R2x, R4x, R5x, RCx, RDx, RMx, RNx • 2873-CTO • 2874-CTO, 22x, 33x, 37x, 3Ex, 3Px, 3Qx, 3Rx, 3Sx, 47x, 4Mx, 4Nx, 4Px, 4Qx, 52x, 53x, 5Ax, 5Bx, 5Jx, 5Kx, 6Px, 6Qx, 6Vx, 7Bx, 7Cx, 7Dx, 7Gx, 7Ux, 7Vx, 8Dx, 8Fx, 8Gx, 8Hx, 8Jx, 8Kx, 8Lx • 2875-CTO, 22x, 2Dx, 2Ex, 2Lx, 2Vx, 2Xx, 32x, 33x, 39x, 3Ax, 3Px, 3Yx, 43x, 46x, 47x, 48x, 4Ax, 4Fx, 4Gx, 4Hx, 4Nx, 4Px, 4Rx, 54x, 55x, 57x, 59x, 5Bx, 5Px, 5Qx, R2x, R3x, R7x, R8x • 2931-CTO, 23x, 24x • 5072-CTO	55Y3712	**

Table 40. Parts list—Overall (continued)

No.	FRU (Overall)	FRU no.	CRU ID
4	2-GB DDR3-1067 SDRAM SO-DIMM (PC3-8500) card • 0616-CTO, 22x, 25x, 26x, 27x, 28x, 29x, 2Cx, 2Dx • 2842-CTO, 22x, 23x, 24x, 25x, 26x, 27x, 28x, 29x, 2Ax, 2Bx, 2Cx, 2Dx, 2Ex, 33x, 34x, 35x, 36x, 37x, 39x, 3Bx, 3Dx, 3Fx, 3Gx, 3Hx, 3Px, 3Qx, 3Rx, 3Sx, 3Tx, 3Ux, 3Vx, 42x, 43x, 44x, 45x, 46x, 47x, 48x, 49x, 4Ax, 4Bx, 4Cx, 4Dx, 4Ex, 4Fx, 4Gx, 4Hx, 4Jx, 4Kx, 4Lx, 4Mx, 4Nx, 4Px, 4Qx, 4Rx, 4Sx, 4Tx, 4Vx, 4Wx, 4Xx, 4Zx, 52x, 53x, 54x, 55x, 56x, 57x, 58x, 5Ax, 5Bx, 5Cx, 5Dx, 5Ex, 5Fx, 5Gx, 5Hx, 5Jx, 5Kx, 5Lx, 5Mx, 5Nx, 5Px, 5Qx, 5Rx, 5Sx, 5Tx, 5Ux, 5Vx, 5Wx, 5Xx, 5Yx, 5Zx, 62x, 63x, 64x, 65x, 67x, 69x, 6Ax, 6Bx, 6Dx, 6Fx, 6Gx, 6Hx, 6Jx, 6Kx, 6Lx, 6Mx, 6Nx, 6Qx, 6Sx, 6Tx, 6Ux, 6Wx, 6Yx, 6Zx, 72x, 73x, 74x, 75x, 76x, 77x, 78x, 7Bx, 7Cx, 7Dx, 7Ex, 7Fx, 7Gx, 7Hx, 7Jx, 7Px, 7Qx, 7Rx, 7Tx, 7Ux, 7Vx, 7Wx, 7Yx, 7Zx, 82x, 83x, 84x, 85x, 86x, 89x, 8Ax, 8Bx, 8Cx, 8Dx, 8Gx, 8Hx, 8Jx, 8Kx, 8Lx, 8Rx, 8Ux, 8Vx, 8Wx, 8Xx, 8Yx, 8Zx, 94x, 95x, 96x, 97x, 98x, 99x, 9Cx, 9Dx, 9Ex, 9Fx, 9Gx, 9Hx, 9Lx, 9Mx, 9Nx, 9Px, 9Qx, 9Rx, 9Ux, 9Vx, 9Wx, 9Xx, 9Yx, 9Zx, A4x, A5x, A6x, A7x, A8x, A9x, AAx, ABx, ACx, ADx, AEx, AFx, AGx, AHx, AJx, AKx, ALx, AMx, ANx, APx, AQx, ARx, ASx, ATx, AUx, AVx, AWx, AXx, AYx, AZx, B2x, B3x, B4x, B5x, B6x, B7x, B8x, B9x, BAx, BBx, BGx, BHx, BJx, BKx, BMx, BNx, BPx, BQx, BRx, BSx, BTx, BUx, BVx, BWx, BXx, BYx, BZx, C2x, C3x, C4x, C5x, C6x, C7x, C8x, C9x, CAx, CBx, CCx, CDx, CEx, CFx, CGx, CHx, CJx, CKx, CLx, CMx, CNx, CPx, CQx, CRx, CSx, CUx, CVx, CWx, CXx, CYx, CZx, D2x, D3x, D4x, D5x, D6x, D7x, D8x, D9x, DAx, DBx, DCx, DDx, DEx, DFx, DGx, DHx, DJx, DKx, DLx, DMx, DNx, DPx, DQx, DRx, DSx, DTx, DUx, DVx, DWx, DXx, DYx, DZx, E2x, E3x, E4x, E5x, E6x, E7x, E8x, E9x, EAx, ECx, EDx, EEx, EFx, EGx, EHx, EJx, EKx, ELx, ENx, EPx, EQx, ERx, ESx, ETx, EUx, EVx, EWx, EXx, EYx, EZx, F2x, F3x, F4x, F5x, F6x, F7x, F8x, F9x, FAx, FBx, FCx, FDx, FEx, FFx, FGx, FHx, FJx, FKx, FLx, FMx, FNx, FPx, FQx, FSx, FTx, FUx, FVx, FWx, FXx, FYx, FZx, G2x, G3x, G4x, G5x, G6x, G7x, G8x, G9x, GBx, GCx, GDx, GEx, GFx, GGx, GHx, GJx, GKx, GLx, GMx, GNx, GPx, GQx, GRx, GSx, GTx, GUx, GWx, GXx, GYx, GZx, H2x, H3x, H4x, H5x, H7x, H8x, H9x, HAx, HBx, HCx, HDx, HEx, HFx, HGx, HHx, HJx, HKx, HLx, HMx, HNx, HPx, HQx, HRx, HSx, HTx, HUx, HVx, HWx, HXx, HYx, HZx, J2x, J3x, J4x, J9x, JAx, JBx, JCx, JDx, JEx, JFx, JGx, JHx, JJx, JKx, JLx, JMx, JNx, JPx, JQx, JRx, JSx, JTx, JUx, JVx, JWx, JXx, JYx, JZx, K2x, K3x, K4x, K6x, K8x, K9x, KAx, KBx, KCx, KDx, KFx, KHx, KJx, KKx, KLx, KMx, KNx, KPx, KQx, KRx, KSx, KTx, KUx, KVx, KWx, KXx, KYx, KZx, L5x, L6x • 2874-CTO, 32x, 34x, 35x, 36x, 39x, 3Bx, 3Gx, 3Kx, 3Lx, 3Mx, 3Nx, 46x, 48x, 49x, 4Ax, 4Bx, 4Cx, 4Dx, 4Fx, 4Gx, 4Hx, 4Jx, 4Kx, 4Lx, 54x, 55x, 56x, 57x, 58x, 59x, 5Cx, 5Dx, 5Ex, 5Fx, 5Gx, 5Hx, 5Lx, 5Mx, 5Nx, 5Px, 5Qx, 5Rx, 62x, 63x, 64x, 65x, 66x, 67x, 68x, 69x, 6Ax, 6Bx, 6Cx, 6Dx, 6Ex, 6Fx, 6Gx, 6Hx, 6Jx, 6Kx, 6Lx, 6Mx, 6Nx, 6Rx, 6Sx, 6Tx, 6Ux, 6Vx, 6Wx, 6Xx, 6Yx, 6Zx, 72x, 73x, 74x, 75x, 76x, 77x, 78x, 79x, 7Ax, 7Bx, 7Cx, 7Dx, 7Ex, 7Fx, 7Hx, 7Jx, 7Kx, 7Lx, 7Mx, 7Nx, 7Px, 7Qx, 7Rx, 7Sx, 7Tx, 7Ux, 7Wx, 7Xx, 7Yx, 7Zx, 82x, 83x, 84x, 85x, 86x, 87x, 88x, 89x, 8Ax, 8Bx, 8Cx, 8Ex, 8Mx, 8Nx • 2931-CTO, 22x, 23x, 24x, 25x, 26x, 27x, 28x, 29x, 2Ax, 2Bx (to be continued)	55Y3713	**

Table 40. Parts list—Overall (continued)

No.	FRU (Overall)	FRU no.	CRU ID
4	(continued) 2-GB DDR3-1067 SDRAM SO-DIMM (PC3-8500) card • 2847-CTO, 22x, 25x, 27x, 28x, 29x, 2Ax, 2Cx, 2Ex, 2Fx, 2Gx, 2Hx, 2Jx, 2Kx, 2Lx, 2Mx, 2Nx, 2Px, 2Qx, 2Rx, 2Sx, 2Tx, 2Ux, 2Vx, 2Xx, 2Yx, 2Zx, 33x, 34x, 35x, 39x, 3Dx, 3Ex, 3Kx, 3Lx, 3Mx, 3Nx, 3Px, 3Qx, 3Vx, 3Wx, 3Xx, 3Yx, 3Zx, 42x, 43x, 44x, 45x, 46x, 47x, 48x, 49x, 4Bx, 4Cx, 4Dx, 4Ex, 4Fx, 4Gx, 4Hx, 4Jx, 4Nx, 4Px, 4Qx, 4Rx, 4Sx, 4Tx, 4Ux, 4Vx, 4Wx, 4Xx, 4Yx, 4Zx, 54x, 55x, 56x, 57x, 58x, 59x, 5Cx, 5Dx, 5Ex, 5Fx, 5Gx, 5Jx, 5Lx, 5Mx, 5Nx, 5Px, 5Qx, 5Rx, 5Sx, 5Tx, 5Vx, 5Xx, 5Yx, 5Zx, 62x, 63x, 64x, 65x, 66x, 67x, 68x, 69x, 6Ax, 6Bx, 6Cx, 6Dx, 6Gx, 6Hx, 6Jx, 6Kx, 6Lx, 6Mx, 6Nx, 6Px, 6Qx, 6Rx, 6Sx, 6Tx, 6Ux, 6Vx, 6Wx, 6Xx, 6Yx, 6Zx, 72x, 73x, 74x, 75x, 76x, 77x, 78x, 79x, 7Ax, 7Dx, 7Ex, 7Fx, 7Jx, 7Kx, 7Lx, 7Mx, 7Nx, 7Px, 7Qx, 7Rx, 7Sx, 7Tx, 7Ux, 7Vx, 7Wx, 7Xx, 7Yx, 7Zx, 82x, 83x, 84x, 85x, 86x, 87x, 88x, 8Dx, 8Ex, 8Fx, 8Gx, 8Hx, 8Jx, 8Kx, 8Lx, 8Mx, 8Nx, 8Px, 8Qx, 8Rx, 8Sx, 8Tx, 8Ux, 8Vx, 8Yx, 8Zx, 92x, 93x, 94x, 95x, 96x, 97x, 98x, 99x, 9Ax, 9Bx, 9Cx, 9Dx, 9Ex, 9Fx, 9Gx, 9Hx, 9Jx, 9Kx, 9Lx, 9Mx, 9Nx, 9Px, 9Qx, 9Rx, 9Sx, 9Tx, 9Ux, 9Vx, 9Wx, 9Xx, 9Yx, 9Zx, A2x, A3x, A4x, A5x, A6x, A7x, A8x, A9x, AAx, ABx, ACx, ADx, AEx, AFx, AGx, AHx, AJx, AKx, ALx, AMx, ANx, APx, AQx, ARx, ASx, ATx, AUx, AVx, AWx, AXx, AYx, AZx, B2x, B3x, B4x, B5x, B6x, B7x, B8x, B9x, BAx, BCx, BDx, BEx, BFx, BGx, BHx, BJx, BKx, BMx, BNx, BPx, BQx, BRx, BSx, BTx, BUx, BVx, BWx, BXx, BYx, BZx, C2x, C3x, C4x, C5x, C6x, C7x, C8x, C9x, CAx, CBx, CCx, CDx, CEx, CFx, CGx, CHx, CJx, CKx, CLx, CMx, CNx, CQx, CSx, CUx, CVx, CWx, CXx, CYx, CZx, D2x, D3x, D5x, D6x, D7x, D9x, DAx, DBx, DCx, DDx, DEx, DFx, DGx, DHx, DJx, DKx, DLx, Q2x, Q3x, Q4x, Q5x, Q6x, Q7x, Q8x, Q9x, QAx, QEx, QFx, QGx, QHx, QJx, R3x, R6x, R7x, R8x, R9x, RAx, RBx, RFx, RGx, RHx, RJx, RKx, RLx, RPx, RQx, RRx, RSx, RTx, RUx, RVx, RWx, RXx • 2873-CTO, 22x, 32x, 33x • 2875-CTO, 23x, 24x, 25x, 26x, 27x, 28x, 29x, 2Ax, 2Bx, 2Cx, 2Fx, 2Gx, 2Hx, 2Jx, 2Kx, 2Lx, 2Mx, 2Nx, 2Px, 2Qx, 2Rx, 2Sx, 2Tx, 2Ux, 2Vx, 2Wx, 2Xx, 2Yx, 2Zx, 35x, 36x, 3Mx, 3Nx, 3Wx, 3Xx, 3Zx, 42x, 44x, 45x, 49x, 4Bx, 4Cx, 4Dx, 4Ex, 4Jx, 4Kx, 4Lx, 4Qx, 4Sx, 4Tx, 4Ux, 4Vx, 4Wx, 4Xx, 4Yx, 52x, 53x, 56x, 58x, 59x, 5Ax, 5Bx, 5Cx, 5Dx, 5Ex, 5Fx, 5Gx, 5Hx, 5Jx, 5Kx, 5Lx, 5Mx, 5Nx, 5Rx, 5Sx, R4x, R5x, R6x, R9x, RAx, RBx, RCx, RDx, RFx, RGx, RHx, RJx • 5072-CTO	55Y3713	**
4	4-GB DDR3-1067 SDRAM SO-DIMM (PC3-8500) card • 0616-CTO • 2842-CTO, GVx • 2847-CTO, 23x, 36x, 5Ax, 5Bx, 6Ex, 6Fx, 8Wx, 8Xx, CPx, CRx, D8x, QBx, QCx • 2873-CTO • 2874-CTO • 2875-CTO • 2931-CTO • 5072-CTO	55Y3714	**

Table 40. Parts list—Overall (continued)

No.	FRU (Overall)	FRU no.	CRU ID
4	1-GB DDR3-1333 SDRAM SO-DIMM (PC3-10600) card • 0616-CTO • 2842-CTO • 2847-CTO • 2873-CTO • 2874-CTO • 2875-CTO • 2931-CTO • 5072-CTO • 0530-CTO, 59x, 5Ax, 5Bx, 5Cx, 5Dx • 0553-CTO, 22x, 33x, 44x, 52x, 53x, 57x, 59x, 5Dx, 5Fx, 5Gx • 0585-CTO, 44x, 53x, 6Nx • 0591-CTO • 4403-CTO, 3Nx, 3Px, 3Qx, 3Rx, 3Sx, 3Tx, 3Ux, 3Vx, 3Wx, 3Xx, 3Yx, 3Zx, 42x, 64x, 65x, 66x, 6Bx, 6Nx • 4404-CTO, 4Qx • 2550-CTO, 44x • 2597-CTO, 58x, 59x, 5Ax, 5Bx • 2598-CTO, 22x, 33x, 44x, 57x • 2599-CTO • 4444-CTO, 39x, 3Ax, 3Bx, 3Cx, 4Bx, 4Cx, 4Dx, 4Gx • 4447-CTO	55Y3715	**

Table 40. Parts list—Overall (continued)

No.	FRU (Overall)	FRU no.	CRU ID
4	2-GB DDR3-1333 SDRAM SO-DIMM (PC3-10600) card • 0616-CTO • 2842-CTO • 2847-CTO • 2873-CTO • 2874-CTO • 2875-CTO • 2931-CTO • 5072-CTO • 0530-CTO, 22x, 32x, 52x, 53x, 54x, 55x, 56x, 57x, 59x, 5Ax, 5Bx, 5Cx, 5Dx, 5Ex, 5Fx, 5Gx, 5Jx, 5Kx, 5Lx, 5Mx, 5Nx, 5Px, 5Qx, 5Rx, 5Sx, 5Tx, 5Ux, 5Vx, 5Wx, 5Xx, 5Zx, 62x, 63x, 64x, 65x, 66x, 67x, 68x, 69x, 6Ax, 6Bx, 6Cx, 6Dx, 6Ex, 6Fx, 6Gx, 6Hx, 6Jx, 6Kx, 6Lx, 6Mx, 6Nx, • 0553-CTO, 22x, 24x, 25x, 33x, 35x, 42x, 43x, 44x, 52x, 53x, 54x, 55x, 56x, 57x, 58x, 59x, 5Ax, 5Bx, 5Cx, 5Fx, 5Gx, 5Hx, 5Jx, 5Kx, 5Lx, 5Mx, 5Nx, 5Px, 5Qx, 5Rx, 5Tx, 5Ux, 5Vx, 5Wx, 5Xx, 5Yx, 5Zx, 62x, 63x, 64x, 65x, 66x, 67x, 68x, 69x, 6Bx, 6Cx, 6Dx, 6Fx, 6Gx, 6Hx, 6Jx, 6Kx, 6Lx, 6Mx, 6Nx, 6Px, 6Qx, 6Rx, 6Sx, 6Tx, 6Ux, 6Vx, 6Wx, 6Xx, 6Yx, 6Zx, 72x, 73x, 74x, 75x, 76x, 78x, 79x, 7Ax, 7Bx, 7Cx, 7Dx, 7Ex, 7Fx, 7Gx, 7Hx, 7Jx, 7Kx, 7Mx, 7Nx, 7Px, 7Qx, 7Rx, 7Tx, 7Vx, 7Wx, 7Xx, 7Yx, 85x, 86x, 87x, 88x, 89x, 8Dx, 8Ex, R2x, R3x • 0585-CTO, 42x, 43x, 44x, 52x, 53x, 54x, 55x, 57x, 58x, 59x, 5Ax, 5Bx, 5Dx, 5Fx, 5Hx, 5Kx, 5Mx, 5Px, 5Rx, 5Tx, 5Vx, 5Yx, 64x, 65x, 67x, 68x, 69x, 6Ax, 6Bx, 6Cx, 6Dx, 6Ex, 6Fx, 6Gx, 6Hx, 6Jx, 6Kx, 6Lx, 6Mx, 6Px, 6Qx, 6Rx, 6Sx, 6Tx, 6Ux, 6Xx, 6Yx, 6Zx, 74x, 75x, 76x, 77x • 0591-CTO, 52x, 53x • 4403-CTO, 32x, 33x, 34x, 35x, 36x, 37x, 38x, 39x, 3Ax, 3Bx, 3Cx, 3Dx, 3Ex, 3Fx, 3Gx, 3Hx, 3Jx, 3Kx, 3Lx, 3Mx, 3Nx, 3Px, 3Qx, 3Rx, 3Sx, 3Tx, 3Ux, 3Vx, 3Wx, 3Xx, 3Yx, 3Zx, 42x, 43x, 44x, 45x, 46x, 47x, 48x, 49x, 4Ax, 4Bx, 4Cx, 4Dx, 4Ex, 4Fx, 4Gx, 4Hx, 4Jx, 4Kx, 4Lx, 4Mx, 4Nx, 4Px, 4Rx, 4Sx, 4Tx, 4Ux, 4Vx, 4Wx, 4Xx, 4Yx, 4Zx, 52x, 53x, 54x, 55x, 56x, 57x, 58x, 59x, 5Ax, 5Bx, 5Cx, 5Dx, 5Ex, 5Fx, 5Gx, 5Hx, 5Jx, 5Kx, 5Lx, 5Mx, 5Nx, 5Px, 5Qx, 5Rx, 5Sx, 5Tx, 5Ux, 5Vx, 5Wx, 5Xx, 5Yx, 5Zx, 62x, 63x, 64x, 65x, 66x, 67x, 68x, 69x, 6Ax, 6Bx, 6Dx, 6Ex, 6Fx, 6Gx, 6Hx, 6Jx, 6Kx, 6Lx, 6Mx, 6Px, 6Qx, 6Rx, 6Sx, 6Tx, 6Ux, 6Vx, 6Wx, 6Xx, 6Yx, 6Zx, 72x, 75x, 76x, 77x • 4404-CTO, 32x, 33x, 34x, 35x, 36x, 37x, 38x, 39x, 3Ax, 3Bx, 3Cx, 3Dx, 3Ex, 3Fx, 3Gx, 3Hx, 3Jx, 3Kx, 3Lx, 3Mx, 3Nx, 3Px, 3Qx, 3Rx, 3Sx, 3Tx, 3Ux, 3Vx, 3Wx, 3Xx, 3Yx, 3Zx, 42x, 43x, 44x, 45x, 46x, 47x, 48x, 49x, 4Ax, 4Bx, 4Cx, 4Dx, 4Ex, 4Fx, 4Gx, 4Hx, 4Jx, 4Kx, 4Lx, 4Mx, 4Nx, 4Px, 4Rx, 4Sx, 4Tx, 4Ux, 4Vx, 4Wx, 4Xx, 4Yx, 4Zx (to be continued)	55Y3716	**

Table 40. Parts list—Overall (continued)

No.	FRU (Overall)	FRU no.	CRU ID
4	(continued) 2-GB DDR3-1333 SDRAM SO-DIMM (PC3-10600) card • 2550-CTO, 42x, 43x, 44x, 52x, 53x, 54x, 55x, 57x, 58x, 59x, 5Ax, 5Bx, 5Dx, 5Fx, 5Hx, 5Kx, 5Mx, 5Px, 5Rx, 5Tx, 5Vx, 5Xx, 5Yx, 5Zx, 63x, 64x, 65x, 66x, 67x, 68x, 69x, 6Ax, 6Nx, 6Sx, 6Tx, 6Ux • 2597-CTO, 22x, 32x, 52x, 53x, 54x, 55x, 56x, 58x, 59x, 5Ax, 5Bx, 5Cx, 5Dx, 5Ex, 5Fx, 5Gx, 5Hx, 5Jx, 5Kx, 5Lx, 5Mx, 5Nx, 5Px, 5Qx, 5Rx, 5Sx, 5Vx, 5Wx, 5Xx, 5Yx, 5Zx, 62x, 63x, 64x, 65x, 66x, 67x, 68x, 69x, 6Ax, 6Bx, 6Cx, 6Dx, 6Ex, 6Fx, 6Gx, 6Hx, 6Jx, 6Kx, 6Lx, 6Mx, 6Nx, 6Px, 6Qx • 2598-CTO, 22x, 24x, 25x, 33x, 34x, 42x, 43x, 44x, 52x, 53x, 54x, 55x, 56x, 57x, 5Bx, 5Cx, 5Dx, 5Ex, 5Fx, 5Gx, 5Hx, 5Jx, 5Kx, 5Lx, 5Mx, 5Nx, 5Px, 5Qx, 5Rx, 5Sx, 5Tx, 5Vx, 5Wx, 5Xx, 5Yx, 5Zx, 62x, 63x, 64x, 65x, 66x, 67x, 68x, 69x, 6Ax, 6Bx, 6Cx, 6Dx, 6Ex, 6Fx, 6Jx, 6Kx, 6Lx, 6Nx, 6Px, 6Qx, 6Rx, 6Sx, 6Tx, 6Ux, 6Vx, 6Wx, 6Yx, 6Zx, 72x, 73x, 74x, 75x, 76x, 77x, 78x, 79x, 7Ax, 7Bx, 7Cx, 7Ex, 7Fx, 7Gx, 7Hx, 7Jx, 7Kx, 7Qx, 7Vx, 7Wx, 7Xx, 7Yx, 7Zx, R2x, R3x • 2599-CTO, 52x, 53x • 4444-CTO, 32x, 33x, 34x, 35x, 36x, 37x, 38x, 39x, 3Ax, 3Bx, 3Cx, 3Dx, 3Ex, 3Fx, 3Gx, 3Hx, 3Jx, 3Kx, 3Lx, 3Mx, 3Nx, 3Px, 3Qx, 3Rx, 3Sx, 3Tx, 3Ux, 3Vx, 3Wx, 3Yx, 3Zx, 42x, 43x, 44x, 45x, 46x, 47x, 48x, 49x, 4Ax, 4Bx, 4Cx, 4Dx, 4Ex, 4Fx, 4Gx, 4Hx, 4Jx, 4Nx, 4Px, 4Rx, 4Sx, 4Tx, 4Ux, 4Vx, 4Wx, 53x, 54x, 55x, 56x, 58x, 59x, 5Ax, 5Bx, 5Cx • 4447-CTO, 32x, 33x, 34x, 35x, 36x, 37x, 38x, 39x, 3Ax, 3Bx, 3Cx, 3Dx, 3Ex, 3Fx, 3Gx, 3Hx, 7Lx, 7Mx, 7Nx, 7Px	55Y3716	**
4	4-GB DDR3-1333 SDRAM SO-DIMM (PC3-10600) card • 0616-CTO • 2842-CTO • 2847-CTO • 2873-CTO • 2874-CTO • 2875-CTO • 2931-CTO • 5072-CTO • 0530-CTO • 0553-CTO, 36x, 5Ex, 77x, 7Lx, 7Sx, 7Ux, 7Zx, 82x, 83x, 84x, 8Ax, 8Bx, 8Cx • 0585-CTO, 56x, 66x • 0591-CTO • 4403-CTO, 6Cx, 73x, 74x • 4404-CTO • 2550-CTO, 62x • 2597-CTO, 5Tx • 2598-CTO, 35x, 58x, 59x, 5Ax, 6Gx, 6Xx, 7Dx, 7Rx, 7Sx, 7Tx, 7Ux, 82x, 83x, 84x, 85x • 2599-CTO • 4444-CTO, 4Kx, 4Lx, 4Mx, 4Qx, 4Xx, 4Yx, 4Zx, 52x, 57x, 5Dx, 5Ex • 4447-CTO	55Y3717	**
5	Media Card Reader board assembly	60Y5644	N
6	Media Card Reader slot blank bezel	60Y4342	N
7	USB cable assembly for 14W	45M2861	N
7	USB cable assembly for 15W	45M2871	N
8	USB connector board assembly for SL410, L410, SL510, and L510	60Y5645	N
8	USB connector board assembly for L412 and L512	75Y4072	N
9	DC-in cable for SL410, L410, and L412	45M2862	N
9	DC-in cable for SL510, L510, and L512	45M2863	N

Table 40. Parts list—Overall (continued)

No.	FRU (Overall)	FRU no.	CRU ID
10	Battery pack, 4 cell Li-Polymer (2.2 Ah) • 0616-CTO, 2Cx, 2Dx • 2842-CTO, 34x, 3Gx, 3Px, 3Rx, 46x, 66x, 67x, 68x, 69x, 6Ax, 6Bx, 6Cx, 6Dx, 6Ex, 6Fx, 6Gx, 6Hx, 6Jx, 6Kx, 6Lx, 6Mx, 6Nx, 6Px, 6Qx, 6Rx, 6Sx, 6Tx, 6Ux, 6Vx, 6Wx, 6Xx, 6Yx, 6Zx, 72x, 73x, 74x, 75x, 76x, 77x, 87x, 88x, 89x, 8Ax, 8Bx, 8Cx, 8Dx, 8Ex, 8Fx, 8Gx, 8Hx, 8Jx, 8Kx, 8Lx, 8Mx, 8Nx, 8Sx, 8Tx, 8Ux, 8Vx, 8Wx, 8Xx, 8Yx, 8Zx, 92x, 93x, 94x, 95x, 96x, 97x, 98x, 99x, 9Ax, 9Bx, 9Cx, 9Dx, 9Ex, 9Fx, 9Gx, 9Hx, 9Jx, 9Kx, 9Lx, 9Mx, 9Nx, 9Px, 9Qx, 9Rx, 9Sx, 9Tx, 9Ux, 9Vx, 9Wx, 9Xx, 9Yx, 9Zx, A2x, A3x, A4x, A5x, A6x, A7x, A8x, A9x, AAx, ABx, ACx, ADx, AEx, AFx, BZx, C2x, C3x, C4x, EBx, ECx, EDx, EEx, EFx, EGx, EHx, EJx, EKx, ELx, EMx, ENx, EPx, EQx, ERx, ESx, ETx, EUx, EVx, EWx, EXx, EYx, FCx, FDx, FEx, FFx, FGx, FHx, FJx, FKx, FLx, GYx, GZx, H2x, H3x, H4x, H5x, H6x, HFx, HGx, HHx, HQx, J5x, J6x, J7x, J8x, J9x, JAx, JBx, JCx, JDx, JEx, JYx, JZx, K2x, K5x, K6x, K7x, K8x, K9x, KAx, KBx, KCx, KDx, KEx, KFx, KGx, KHx, KJx, KKx, KLx, KMx, KNx, KPx, KQx, KRx, KSx, KTx, KUx, L2x, L3x, L4x, L5x, L6x, L7x • 2847-CTO, 33x, 3Lx, 4Jx, 5Hx, 5Jx, 5Kx, 5Lx, 5Mx, 5Nx, 5Px, 5Qx, 5Rx, 5Sx, 5Tx, 5Ux, 5Vx, 5Wx, 5Xx, 5Yx, 5Zx, 62x, 63x, 64x, 65x, 66x, 67x, 6Rx, 6Sx, 6Tx, 7Ax, 7Bx, 7Cx, 8Qx, 8Rx, 8Sx, 8Tx, 9Kx, 9Lx, A9x, BBx, CAx, CBx, CCx, CDx, CEx, CGx, CHx, DLx, R2x, R3x, R4x, R5x, R6x, R7x, R8x, R9x, RAx, RBx, RCx, RDx, RFx, RGx, RHx, RJx, RKx, RLx, RMx, RNx, RPx, RQx, RRx, RSx, RTx, RUx, RVx, RWx, RXx • 2873-CTO, • 2874-CTO, 22x, 35x, 3Lx, 3Mx, 3Nx, 3Px, 3Qx, 3Rx, 3Sx, 4Dx, 4Gx, 4Hx, 4Mx, 4Nx, 4Px, 4Qx, 52x, 53x, 54x, 55x, 56x, 57x, 58x, 59x, 5Ax, 5Bx, 5Cx, 5Dx, 5Ex, 5Fx, 5Gx, 5Hx, 5Jx, 5Kx, 5Lx, 5Mx, 5Nx, 5Px, 5Qx, 5Rx, 66x, 67x, 68x, 69x, 6Ax, 6Bx, 6Tx, 6Ux, 6Wx, 6Xx, 6Yx, 73x, 74x, 75x, 76x, 79x, 7Ax, 7Gx, 7Hx, 7Jx, 7Kx, 7Lx, 7Mx, 7Nx, 7Vx, 7Wx, 7Xx, 7Yx, 8Dx, 8Ex, 8Fx, 8Gx, 8Hx, 8Jx, 8Kx, 8Lx, 8Mx, 8Nx, • 2875-CTO, 22x, 2Gx, 2Ux, 2Vx, 2Yx, 35x, 3Nx, 4Lx, 4Nx, 4Px, 4Qx, 4Rx, 4Sx, 4Tx, 58x, 5Dx, R2x, R3x, R4x, R5x, R6x, R7x, R8x, R9x, RAx, RBx, RCx, RDx, RFx, RGx, RHx, RJx • 2931-CTO • 5072-CTO (to be continued)	42T4763	*
10	(continued) Battery pack, 4 cell Li-Polymer (2.2 Ah) • 0530-CTO, 5Lx, 5Mx, 5Nx, 5Px, 5Qx, 5Rx, 5Sx, 5Tx, 5Ux, 5Vx • 0553-CTO, 5Zx, 62x, 63x, 64x, 65x, 66x, 67x, 68x, 69x • 0585-CTO • 0591-CTO • 4403-CTO • 4404-CTO • 2550-CTO • 2597-CTO, 5Gx, 5Hx, 5Jx, 5Kx, 5Lx, 5Mx, 5Nx, 5Px, 5Qx • 2598-CTO, 67x, 68x, 69x, 6Ax, 6Bx, 6Cx, 6Dx, 6Ex, 6Fx • 2599-CTO • 4444-CTO • 4447-CTO	42T4763	*

Table 40. Parts list—Overall (continued)

No.	FRU (Overall)	FRU no.	CRU ID
10	Battery pack, 4 cell Li-Polymer (2.2 Ah) • 0616-CTO, 2Cx, 2Dx • 2842-CTO, 34x, 3Gx, 3Px, 3Rx, 46x, 66x, 67x, 68x, 69x, 6Ax, 6Bx, 6Cx, 6Dx, 6Ex, 6Fx, 6Gx, 6Hx, 6Jx, 6Kx, 6Lx, 6Mx, 6Nx, 6Px, 6Qx, 6Rx, 6Sx, 6Tx, 6Ux, 6Vx, 6Wx, 6Xx, 6Yx, 6Zx, 72x, 73x, 74x, 75x, 76x, 77x, 87x, 88x, 89x, 8Ax, 8Bx, 8Cx, 8Dx, 8Ex, 8Fx, 8Gx, 8Hx, 8Jx, 8Kx, 8Lx, 8Mx, 8Nx, 8Sx, 8Tx, 8Ux, 8Vx, 8Wx, 8Xx, 8Yx, 8Zx, 92x, 93x, 94x, 95x, 96x, 97x, 98x, 99x, 9Ax, 9Bx, 9Cx, 9Dx, 9Ex, 9Fx, 9Gx, 9Hx, 9Jx, 9Kx, 9Lx, 9Mx, 9Nx, 9Px, 9Qx, 9Rx, 9Sx, 9Tx, 9Ux, 9Vx, 9Wx, 9Xx, 9Yx, 9Zx, A2x, A3x, A4x, A5x, A6x, A7x, A8x, A9x, AAx, ABx, ACx, ADx, AEx, AFx, BZx, C2x, C3x, C4x, EBx, ECx, EDx, EEx, EFx, EGx, EHx, EJx, EKx, ELx, EMx, ENx, EPx, EQx, ERx, ESx, ETx, EUx, EVx, EWx, EXx, EYx, FCx, FDx, FEx, FFx, FGx, FHx, FJx, FKx, FLx, GYx, GZx, H2x, H3x, H4x, H5x, H6x, HFx, HGx, HHx, HQx, J5x, J6x, J7x, J8x, J9x, JAx, JBx, JCx, JDx, JEx, JYx, JZx, K2x, K5x, K6x, K7x, K8x, K9x, KAx, KBx, KCx, KDx, KEx, KFx, KGx, KHx, KJx, KKx, KLx, KMx, KNx, KPx, KQx, KRx, KSx, KTx, KUx, L2x, L3x, L4x, L5x, L6x, L7x • 2847-CTO, 33x, 3Lx, 4Jx, 5Hx, 5Jx, 5Kx, 5Lx, 5Mx, 5Nx, 5Px, 5Qx, 5Rx, 5Sx, 5Tx, 5Ux, 5Vx, 5Wx, 5Xx, 5Yx, 5Zx, 62x, 63x, 64x, 65x, 66x, 67x, 6Rx, 6Sx, 6Tx, 7Ax, 7Bx, 7Cx, 8Qx, 8Rx, 8Sx, 8Tx, 9Kx, 9Lx, A9x, BBx, CAx, CBx, CCx, CDx, CEx, CGx, CHx, DLx, R2x, R3x, R4x, R5x, R6x, R7x, R8x, R9x, RAx, RBx, RCx, RDx, RFx, RGx, RHx, RJx, RKx, RLx, RMx, RNx, RPx, RQx, RRx, RSx, RTx, RUx, RVx, RWx, RXx • 2873-CTO, • 2874-CTO, 22x, 35x, 3Lx, 3Mx, 3Nx, 3Px, 3Qx, 3Rx, 3Sx, 4Dx, 4Gx, 4Hx, 4Mx, 4Nx, 4Px, 4Qx, 52x, 53x, 54x, 55x, 56x, 57x, 58x, 59x, 5Ax, 5Bx, 5Cx, 5Dx, 5Ex, 5Fx, 5Gx, 5Hx, 5Jx, 5Kx, 5Lx, 5Mx, 5Nx, 5Px, 5Qx, 5Rx, 66x, 67x, 68x, 69x, 6Ax, 6Bx, 6Tx, 6Ux, 6Wx, 6Xx, 6Yx, 73x, 74x, 75x, 76x, 79x, 7Ax, 7Gx, 7Hx, 7Jx, 7Kx, 7Lx, 7Mx, 7Nx, 7Vx, 7Wx, 7Xx, 7Yx, 8Dx, 8Ex, 8Fx, 8Gx, 8Hx, 8Jx, 8Kx, 8Lx, 8Mx, 8Nx, • 2875-CTO, 22x, 2Gx, 2Ux, 2Vx, 2Yx, 35x, 3Nx, 4Lx, 4Nx, 4Px, 4Qx, 4Rx, 4Sx, 4Tx, 58x, 5Dx, R2x, R3x, R4x, R5x, R6x, R7x, R8x, R9x, RAx, RBx, RCx, RDx, RFx, RGx, RHx, RJx • 2931-CTO • 5072-CTO (to be continued)	42T4765	*
10	(continued) Battery pack, 4 cell Li-Polymer (2.2 Ah) • 0530-CTO, 5Lx, 5Mx, 5Nx, 5Px, 5Qx, 5Rx, 5Sx, 5Tx, 5Ux, 5Vx • 0553-CTO, 5Zx, 62x, 63x, 64x, 65x, 66x, 67x, 68x, 69x • 0585-CTO • 0591-CTO • 4403-CTO • 4404-CTO • 2550-CTO • 2597-CTO, 5Gx, 5Hx, 5Jx, 5Kx, 5Lx, 5Mx, 5Nx, 5Px, 5Qx • 2598-CTO, 67x, 68x, 69x, 6Ax, 6Bx, 6Cx, 6Dx, 6Ex, 6Fx • 2599-CTO • 4444-CTO • 4447-CTO	42T4765	*

Table 40. Parts list—Overall (continued)

No.	FRU (Overall)	FRU no.	CRU ID
10	Battery pack, 4 cell Li-Polymer (2.2 Ah) • 0616-CTO, 2Cx, 2Dx • 2842-CTO, 34x, 3Gx, 3Px, 3Rx, 46x, 66x, 67x, 68x, 69x, 6Ax, 6Bx, 6Cx, 6Dx, 6Ex, 6Fx, 6Gx, 6Hx, 6Jx, 6Kx, 6Lx, 6Mx, 6Nx, 6Px, 6Qx, 6Rx, 6Sx, 6Tx, 6Ux, 6Vx, 6Wx, 6Xx, 6Yx, 6Zx, 72x, 73x, 74x, 75x, 76x, 77x, 87x, 88x, 89x, 8Ax, 8Bx, 8Cx, 8Dx, 8Ex, 8Fx, 8Gx, 8Hx, 8Jx, 8Kx, 8Lx, 8Mx, 8Nx, 8Sx, 8Tx, 8Ux, 8Vx, 8Wx, 8Xx, 8Yx, 8Zx, 92x, 93x, 94x, 95x, 96x, 97x, 98x, 99x, 9Ax, 9Bx, 9Cx, 9Dx, 9Ex, 9Fx, 9Gx, 9Hx, 9Jx, 9Kx, 9Lx, 9Mx, 9Nx, 9Px, 9Qx, 9Rx, 9Sx, 9Tx, 9Ux, 9Vx, 9Wx, 9Xx, 9Yx, 9Zx, A2x, A3x, A4x, A5x, A6x, A7x, A8x, A9x, AAx, ABx, ACx, ADx, AEx, AFx, BZx, C2x, C3x, C4x, EBx, ECx, EDx, EEx, EFx, EGx, EHx, EJx, EKx, ELx, EMx, ENx, EPx, EQx, ERx, ESx, ETx, EUx, EVx, EWx, EXx, EYx, FCx, FDx, FEx, FFx, FGx, FHx, FJx, FKx, FLx, GYx, GZx, H2x, H3x, H4x, H5x, H6x, HFx, HGx, HHx, HQx, J5x, J6x, J7x, J8x, J9x, JAx, JBx, JCx, JDx, JEx, JYx, JZx, K2x, K5x, K6x, K7x, K8x, K9x, KAx, KBx, KCx, KDx, KEx, KFx, KGx, KHx, KJx, KKx, KLx, KMx, KNx, KPx, KQx, KRx, KSx, KTx, KUx, L2x, L3x, L4x, L5x, L6x, L7x • 2847-CTO, 33x, 3Lx, 4Jx, 5Hx, 5Jx, 5Kx, 5Lx, 5Mx, 5Nx, 5Px, 5Qx, 5Rx, 5Sx, 5Tx, 5Ux, 5Vx, 5Wx, 5Xx, 5Yx, 5Zx, 62x, 63x, 64x, 65x, 66x, 67x, 6Rx, 6Sx, 6Tx, 7Ax, 7Bx, 7Cx, 8Qx, 8Rx, 8Sx, 8Tx, 9Kx, 9Lx, A9x, BBx, CAx, CBx, CCx, CDx, CEx, CGx, CHx, DLx, R2x, R3x, R4x, R5x, R6x, R7x, R8x, R9x, RAx, RBx, RCx, RDx, RFx, RGx, RHx, RJx, RKx, RLx, RMx, RNx, RPx, RQx, RRx, RSx, RTx, RUx, RVx, RWx, RXx • 2873-CTO, • 2874-CTO, 22x, 35x, 3Lx, 3Mx, 3Nx, 3Px, 3Qx, 3Rx, 3Sx, 4Dx, 4Gx, 4Hx, 4Mx, 4Nx, 4Px, 4Qx, 52x, 53x, 54x, 55x, 56x, 57x, 58x, 59x, 5Ax, 5Bx, 5Cx, 5Dx, 5Ex, 5Fx, 5Gx, 5Hx, 5Jx, 5Kx, 5Lx, 5Mx, 5Nx, 5Px, 5Qx, 5Rx, 66x, 67x, 68x, 69x, 6Ax, 6Bx, 6Tx, 6Ux, 6Wx, 6Xx, 6Yx, 73x, 74x, 75x, 76x, 79x, 7Ax, 7Gx, 7Hx, 7Jx, 7Kx, 7Lx, 7Mx, 7Nx, 7Vx, 7Wx, 7Xx, 7Yx, 8Dx, 8Ex, 8Fx, 8Gx, 8Hx, 8Jx, 8Kx, 8Lx, 8Mx, 8Nx, • 2875-CTO, 22x, 2Gx, 2Ux, 2Vx, 2Yx, 35x, 3Nx, 4Lx, 4Nx, 4Px, 4Qx, 4Rx, 4Sx, 4Tx, 58x, 5Dx, R2x, R3x, R4x, R5x, R6x, R7x, R8x, R9x, RAx, RBx, RCx, RDx, RFx, RGx, RHx, RJx • 2931-CTO • 5072-CTO	42T4913	*
10	Battery pack, 4 cell Li-ion (2.2 Ah) • 0530-CTO, 5Lx, 5Mx, 5Nx, 5Px, 5Qx, 5Rx, 5Sx, 5Tx, 5Ux, 5Vx • 0553-CTO, 5Zx, 62x, 63x, 64x, 65x, 66x, 67x, 68x, 69x • 0585-CTO • 0591-CTO • 4403-CTO • 4404-CTO • 2550-CTO • 2597-CTO, 5Gx, 5Hx, 5Jx, 5Kx, 5Lx, 5Mx, 5Nx, 5Px, 5Qx • 2598-CTO • 2599-CTO • 4444-CTO • 4447-CTO	42T4887	*

Table 40. Parts list—Overall (continued)

No.	FRU (Overall)	FRU no.	CRU ID
10	Battery pack, 6 cell Li-ion (2.2 Ah) • 0616-CTO, 22x, 25x, 26x, 27x, 28x, 29x • 2842-CTO, 23x, 24x, 25x, 26x, 27x, 28x, 29x, 2Ax, 2Bx, 2Cx, 2Dx, 2Ex, 7Px, 7Qx, 7Rx, 7Sx, 7Tx, 7Ux, 7Vx, 7Wx, 7Xx, 7Yx, 7Zx, 82x, 83x, 84x, 85x, 86x, 8Rx, AGx, AHx, AJx, AKx, ALx, AMx, ANx, APx, AQx, ARx, ASx, ATx, AUx, AVx, AWx, AXx, AYx, AZx, B2x, B3x, B4x, B5x, B6x, B7x, B8x, B9x, BAx, BBx, BCx, BDx, BEx, BFx, BGx, BHx, BJx, BKx, BMx, BNx, BPx, BQx, BRx, BSx, BTx, BUx, BVx, BWx, BXx, BYx, C5x, C6x, C7x, C8x, C9x, CAx, CBx, CCx, CDx, CEx, CFx, CGx, CHx, CJx, CKx, CLx, CMx, CNx, CPx, CQx, CRx, CSx, CUx, CVx, CWx, CXx, CYx, CZx, D2x, D3x, D4x, D5x, D6x, D7x, D8x, D9x, DAx, DDx, DEx, DFx, DGx, DHx, DJx, DKx, DLx, DMx, DNx, DPx, DQx, DRx, DSx, DTx, DUx, DVx, DWx, DXx, DYx, DZx, E2x, E3x, E4x, E5x, E6x, E7x, E8x, E9x, EAx, F2x, F3x, F4x, F5x, F6x, F7x, F8x, F9x, FAx, FBx, DBx, DCx, EZx, FMx, FNx, FPx, FQx, FSx, FTx, FUx, FVx, FWx, FXx, FYx, FZx, G2x, G3x, G4x, G5x, G6x, G7x, G8x, G9x, GBx, GCx, GDx, GEx, GFx, GGx, GHx, GJx, GKx, GLx, GMx, GNx, GPx, GQx, GRx, GSx, GTx, GUx, GVx, GWx, GXx, H7x, H8x, H9x, HAx, HBx, HCx, HDx, HEx, HJx, HKx, HLx, HMx, HNx, HPx, HRx, HSx, HTx, HUx, HVx, HWx, HXx, HYx, HZx, J2x, J3x, J4x, 5Zx, JFx, JGx, JHx, JJx, JKx, JLx, JMx, JNx, JPx, JQx, JRx, JTx, JUx, JVx, JWx, JXx, K3x, K4x, JSx, KVx, KWx, KXx, KYx, KZx • 2847-CTO, 2Rx, 2Sx, 2Tx, 2Ux, 2Vx, 68x, 69x, 6Ax, 6Bx, 6Cx, 6Dx, 6Ex, 6Fx, 6Gx, 6Hx, 6Jx, 6Kx, 6Lx, 6Mx, 72x, 73x, 74x, 75x, 76x, 77x, 78x, 79x, 7Ex, 7Fx, 7Jx, 7Wx, 7Xx, 7Yx, 7Zx, 82x, 83x, 84x, 85x, 86x, 87x, 88x, 89x, 8Ax, 8Bx, 8Cx, 8Dx, 8Ex, 8Fx, 8Gx, 8Hx, 8Jx, 8Kx, 8Lx, 8Mx, 8Nx, 8Px, 8Ux, 8Vx, 8Wx, 8Xx, 8Yx, 8Zx, Q2x, Q3x, Q4x, Q5x, Q6x, Q7x, Q8x, Q9x, QAx, QBx, QCx, QDx, QEx, QFx, QGx, QHx, QJx, 2Wx, 2Xx, 2Yx, 2Zx, 3Vx, 3Wx, 3Xx, 3Yx, 3Zx, 6Nx, 6Px, 6Qx, 6Ux, 6Vx, 6Yx, 6Zx, 7Dx, 7Kx, 7Lx, 7Mx, 7Nx, 92x, 93x, 94x, 95x, 96x, 97x, 98x, 99x, 9Ax, 9Bx, 9Cx, 9Dx, 9Ex, 9Fx, 9Gx, 9Hx, 9Jx, 9Mx, 9Nx, 9Px, 9Qx, 9Rx, 9Sx, 9Tx, 9Ux, 9Vx, 9Wx, 9Xx, 9Yx, 9Zx, 6Wx, 6Xx, 7Px, 7Qx, 7Rx, 7Sx, A2x, A3x, A4x, A5x, A6x, A8x, AAx, ABx, ACx, ADx, AEx, AFx, AGx, AHx, AJx, AKx, ALx, AMx, ANx, APx, AQx, ARx, ASx, 7Tx, 7Ux, 7Vx, ATx, AUx, AVx, AWx, AXx, AYx, AZx, B2x, B3x, B4x, B5x, B6x, B7x, B8x, B9x, BAx, BCx, BDx, BEx, BFx, BGx, BHx, BJx, BKx, BMx, BNx, BPx, BQx, BRx, BSx, BTx, BUx, BVx, BWx, BXx, BYx, BZx, C2x, C3x, C4x, C5x, C6x, C7x, C8x, C9x, CFx, CJx, CKx, CLx, CMx, CNx, CPx, CQx, CRx, CSx, CUx, CVx, CWx, CXx, CYx, CZx, D2x, D3x, D5x, D6x, D7x, D8x, D4x, D9x, DAx, DBx, DCx, DDx, DEx, DFx, DGx, DHx • 2873-CTO • 2874-CTO, 32x, 33x, 34x, 36x, 37x, 39x, 3Bx, 3Ex, 3Gx, 3Kx, 46x, 47x, 48x, 49x, 4Ax, 4Bx, 4Cx, 4Fx, 4Jx, 4Kx, 4Lx, 62x, 63x, 64x, 65x, 6Cx, 6Dx, 6Ex, 6Fx, 6Gx, 6Hx, 6Jx, 6Kx, 6Lx, 6Mx, 6Nx, 6Px, 6Qx, 6Rx, 6Sx, 6Vx, 6Zx, 72x, 77x, 78x, 7Bx, 7Px, 7Qx, 7Rx, 7Sx, 7Tx, 7Ux, 7Cx, 7Dx, 7Ex, 7Fx, 7Zx, 82x, 83x, 84x, 85x, 86x, 87x, 88x, 89x, 8Ax, 8Bx, 8Cx • 2875-CTO, 23x, 24x, 25x, 26x, 27x, 28x, 29x, 2Ax, 2Bx, 2Cx, 2Dx, 2Ex, 2Fx, 2Hx, 2Jx, 2Kx, 2Lx, 2Mx, 3Yx, 2Nx, 2Px, 2Qx, 2Rx, 2Sx, 2Tx, 2Wx, 2Xx, 2Zx, 3Zx, 4Ux, 4Vx, 4Wx, 4Xx, 4Yx, 52x, 53x, 54x, 55x, 56x, 57x, 59x, 5Ax, 5Bx, 5Cx, 5Ex, 5Fx, 5Gx, 5Hx, 5Jx, 5Kx, 5Lx, 5Mx, 5Nx, 5Px, 5Qx, 5Rx, 5Sx • 2931-CTO, 25x, 26x, 27x, 28x, 29x, 2Ax, 2Bx • 5072-CTO (to be continued)	42T4751	*

Table 40. Parts list—Overall (continued)

No.	FRU (Overall)	FRU no.	CRU ID
10	(continued) Battery pack, 6 cell Li-ion (2.2 Ah) • 0530-CTO • 0553-CTO, 8Ex • 0585-CTO • 0591-CTO • 4403-CTO • 4404-CTO • 2550-CTO • 2597-CTO • 2598-CTO • 2599-CTO • 4444-CTO, 53x, 54x, 55x, 56x • 4447-CTO	42T4751	*

Table 40. Parts list—Overall (continued)

No.	FRU (Overall)	FRU no.	CRU ID
10	Battery pack, 6 cell Li-ion (2.2 Ah) • 0616-CTO, 22x, 25x, 26x, 27x, 28x, 29x • 2842-CTO, 23x, 24x, 25x, 26x, 27x, 28x, 29x, 2Ax, 2Bx, 2Cx, 2Dx, 2Ex, 7Px, 7Qx, 7Rx, 7Sx, 7Tx, 7Ux, 7Vx, 7Wx, 7Xx, 7Yx, 7Zx, 82x, 83x, 84x, 85x, 86x, 8Rx, AGx, AHx, AJx, AKx, ALx, AMx, ANx, APx, AQx, ARx, ASx, ATx, AUx, AVx, AWx, AXx, AYx, AZx, B2x, B3x, B4x, B5x, B6x, B7x, B8x, B9x, BAx, BBx, BCx, BDx, BEx, BFx, BGx, BHx, BJx, BKx, BMx, BNx, BPx, BQx, BRx, BSx, BTx, BUx, BVx, BWx, BXx, BYx, C5x, C6x, C7x, C8x, C9x, CAx, CBx, CCx, CDx, CEx, CFx, CGx, CHx, CJx, CKx, CLx, CMx, CNx, CPx, CQx, CRx, CSx, CUx, CVx, CWx, CXx, CYx, CZx, D2x, D3x, D4x, D5x, D6x, D7x, D8x, D9x, DAx, DDx, DEx, DFx, DGx, DHx, DJx, DKx, DLx, DMx, DNx, DPx, DQx, DRx, DSx, DTx, DUx, DVx, DWx, DXx, DYx, DZx, E2x, E3x, E4x, E5x, E6x, E7x, E8x, E9x, EAx, F2x, F3x, F4x, F5x, F6x, F7x, F8x, F9x, FAx, FBx, DBx, DCx, EZx, FMx, FNx, FPx, FQx, FSx, FTx, FUx, FVx, FWx, FXx, FYx, FZx, G2x, G3x, G4x, G5x, G6x, G7x, G8x, G9x, GBx, GCx, GDx, GEx, GFx, GGx, GHx, GJx, GKx, GLx, GMx, GNx, GPx, GQx, GRx, GSx, GTx, GUx, GVx, GWx, GXx, H7x, H8x, H9x, HAx, HBx, HCx, HDx, HEx, HJx, HKx, HLx, HMx, HNx, HPx, HRx, HSx, HTx, HUx, HVx, HWx, HXx, HYx, HZx, J2x, J3x, J4x, 5Zx, JFx, JGx, JHx, JJx, JKx, JLx, JMx, JNx, JPx, JQx, JRx, JTx, JUx, JVx, JWx, JXx, K3x, K4x, JSx, KVx, KWx, KXx, KYx, KZx • 2847-CTO, 2Rx, 2Sx, 2Tx, 2Ux, 2Vx, 68x, 69x, 6Ax, 6Bx, 6Cx, 6Dx, 6Ex, 6Fx, 6Gx, 6Hx, 6Jx, 6Kx, 6Lx, 6Mx, 72x, 73x, 74x, 75x, 76x, 77x, 78x, 79x, 7Ex, 7Fx, 7Jx, 7Wx, 7Xx, 7Yx, 7Zx, 82x, 83x, 84x, 85x, 86x, 87x, 88x, 89x, 8Ax, 8Bx, 8Cx, 8Dx, 8Ex, 8Fx, 8Gx, 8Hx, 8Jx, 8Kx, 8Lx, 8Mx, 8Nx, 8Px, 8Ux, 8Vx, 8Wx, 8Xx, 8Yx, 8Zx, Q2x, Q3x, Q4x, Q5x, Q6x, Q7x, Q8x, Q9x, QAx, QBx, QCx, QDx, QEx, QFx, QGx, QHx, QJx, 2Wx, 2Xx, 2Yx, 2Zx, 3Vx, 3Wx, 3Xx, 3Yx, 3Zx, 6Nx, 6Px, 6Qx, 6Ux, 6Vx, 6Yx, 6Zx, 7Dx, 7Kx, 7Lx, 7Mx, 7Nx, 92x, 93x, 94x, 95x, 96x, 97x, 98x, 99x, 9Ax, 9Bx, 9Cx, 9Dx, 9Ex, 9Fx, 9Gx, 9Hx, 9Jx, 9Mx, 9Nx, 9Px, 9Qx, 9Rx, 9Sx, 9Tx, 9Ux, 9Vx, 9Wx, 9Xx, 9Yx, 9Zx, 6Wx, 6Xx, 7Px, 7Qx, 7Rx, 7Sx, A2x, A3x, A4x, A5x, A6x, A8x, AAx, ABx, ACx, ADx, AEx, AFx, AGx, AHx, AJx, AKx, ALx, AMx, ANx, APx, AQx, ARx, ASx, 7Tx, 7Ux, 7Vx, ATx, AUx, AVx, AWx, AXx, AYx, AZx, B2x, B3x, B4x, B5x, B6x, B7x, B8x, B9x, BAx, BCx, BDx, BEx, BFx, BGx, BHx, BJx, BKx, BMx, BNx, BPx, BQx, BRx, BSx, BTx, BUx, BVx, BWx, BXx, BYx, BZx, C2x, C3x, C4x, C5x, C6x, C7x, C8x, C9x, CFx, CJx, CKx, CLx, CMx, CNx, CPx, CQx, CRx, CSx, CUx, CVx, CWx, CXx, CYx, CZx, D2x, D3x, D5x, D6x, D7x, D8x, D4x, D9x, DAx, DBx, DCx, DDx, DEx, DFx, DGx, DHx • 2873-CTO • 2874-CTO, 32x, 33x, 34x, 36x, 37x, 39x, 3Bx, 3Ex, 3Gx, 3Kx, 46x, 47x, 48x, 49x, 4Ax, 4Bx, 4Cx, 4Fx, 4Jx, 4Kx, 4Lx, 62x, 63x, 64x, 65x, 6Cx, 6Dx, 6Ex, 6Fx, 6Gx, 6Hx, 6Jx, 6Kx, 6Lx, 6Mx, 6Nx, 6Px, 6Qx, 6Rx, 6Sx, 6Vx, 6Zx, 72x, 77x, 78x, 7Bx, 7Px, 7Qx, 7Rx, 7Sx, 7Tx, 7Ux, 7Cx, 7Dx, 7Ex, 7Fx, 7Zx, 82x, 83x, 84x, 85x, 86x, 87x, 88x, 89x, 8Ax, 8Bx, 8Cx • 2875-CTO, 23x, 24x, 25x, 26x, 27x, 28x, 29x, 2Ax, 2Bx, 2Cx, 2Dx, 2Ex, 2Fx, 2Hx, 2Jx, 2Kx, 2Lx, 2Mx, 3Yx, 2Nx, 2Px, 2Qx, 2Rx, 2Sx, 2Tx, 2Wx, 2Xx, 2Zx, 3Zx, 4Ux, 4Vx, 4Wx, 4Xx, 4Yx, 52x, 53x, 54x, 55x, 56x, 57x, 59x, 5Ax, 5Bx, 5Cx, 5Ex, 5Fx, 5Gx, 5Hx, 5Jx, 5Kx, 5Lx, 5Mx, 5Nx, 5Px, 5Qx, 5Rx, 5Sx • 2931-CTO, 25x, 26x, 27x, 28x, 29x, 2Ax, 2Bx • 5072-CTO (to be continued)	42T4753	*

Table 40. Parts list—Overall (continued)

No.	FRU (Overall)	FRU no.	CRU ID
10	(continued) Battery pack, 6 cell Li-ion (2.2 Ah) • 0530-CTO • 0553-CTO, 8Ex • 0585-CTO • 0591-CTO • 4403-CTO • 4404-CTO • 2550-CTO • 2597-CTO • 2598-CTO • 2599-CTO • 4444-CTO, 53x, 54x, 55x, 56x • 4447-CTO	42T4753	*

Table 40. Parts list—Overall (continued)

No.	FRU (Overall)	FRU no.	CRU ID
10	Battery pack, 6 cell Li-ion (2.2 Ah) • 0616-CTO, 22x, 25x, 26x, 27x, 28x, 29x • 2842-CTO, 23x, 24x, 25x, 26x, 27x, 28x, 29x, 2Ax, 2Bx, 2Cx, 2Dx, 2Ex, 7Px, 7Qx, 7Rx, 7Sx, 7Tx, 7Ux, 7Vx, 7Wx, 7Xx, 7Yx, 7Zx, 82x, 83x, 84x, 85x, 86x, 8Rx, AGx, AHx, AJx, AKx, ALx, AMx, ANx, APx, AQx, ARx, ASx, ATx, AUx, AVx, AWx, AXx, AYx, AZx, B2x, B3x, B4x, B5x, B6x, B7x, B8x, B9x, BAx, BBx, BCx, BDx, BEx, BFx, BGx, BHx, BJx, BKx, BMx, BNx, BPx, BQx, BRx, BSx, BTx, BUx, BVx, BWx, BXx, BYx, C5x, C6x, C7x, C8x, C9x, CAx, CBx, CCx, CDx, CEx, CFx, CGx, CHx, CJx, CKx, CLx, CMx, CNx, CPx, CQx, CRx, CSx, CUx, CVx, CWx, CXx, CYx, CZx, D2x, D3x, D4x, D5x, D6x, D7x, D8x, D9x, DAx, DDx, DEx, DFx, DGx, DHx, DJx, DKx, DLx, DMx, DNx, DPx, DQx, DRx, DSx, DTx, DUx, DVx, DWx, DXx, DYx, DZx, E2x, E3x, E4x, E5x, E6x, E7x, E8x, E9x, EAx, F2x, F3x, F4x, F5x, F6x, F7x, F8x, F9x, FAx, FBx, DBx, DCx, EZx, FMx, FNx, FPx, FQx, FSx, FTx, FUx, FVx, FWx, FXx, FYx, FZx, G2x, G3x, G4x, G5x, G6x, G7x, G8x, G9x, GBx, GCx, GDx, GEx, GFx, GGx, GHx, GJx, GKx, GLx, GMx, GNx, GPx, GQx, GRx, GSx, GTx, GUx, GVx, GWx, GXx, H7x, H8x, H9x, HAx, HBx, HCx, HDx, HEx, HJx, HKx, HLx, HMx, HNx, HPx, HRx, HSx, HTx, HUx, HVx, HWx, HXx, HYx, HZx, J2x, J3x, J4x, 5Zx, JFx, JGx, JHx, JJx, JKx, JLx, JMx, JNx, JPx, JQx, JRx, JTx, JUx, JVx, JWx, JXx, K3x, K4x, JSx, KVx, KWx, KXx, KYx, KZx • 2847-CTO, 2Rx, 2Sx, 2Tx, 2Ux, 2Vx, 68x, 69x, 6Ax, 6Bx, 6Cx, 6Dx, 6Ex, 6Fx, 6Gx, 6Hx, 6Jx, 6Kx, 6Lx, 6Mx, 72x, 73x, 74x, 75x, 76x, 77x, 78x, 79x, 7Ex, 7Fx, 7Jx, 7Wx, 7Xx, 7Yx, 7Zx, 82x, 83x, 84x, 85x, 86x, 87x, 88x, 89x, 8Ax, 8Bx, 8Cx, 8Dx, 8Ex, 8Fx, 8Gx, 8Hx, 8Jx, 8Kx, 8Lx, 8Mx, 8Nx, 8Px, 8Ux, 8Vx, 8Wx, 8Xx, 8Yx, 8Zx, Q2x, Q3x, Q4x, Q5x, Q6x, Q7x, Q8x, Q9x, QAx, QBx, QCx, QDx, QEx, QFx, QGx, QHx, QJx, 2Wx, 2Xx, 2Yx, 2Zx, 3Vx, 3Wx, 3Xx, 3Yx, 3Zx, 6Nx, 6Px, 6Qx, 6Ux, 6Vx, 6Yx, 6Zx, 7Dx, 7Kx, 7Lx, 7Mx, 7Nx, 92x, 93x, 94x, 95x, 96x, 97x, 98x, 99x, 9Ax, 9Bx, 9Cx, 9Dx, 9Ex, 9Fx, 9Gx, 9Hx, 9Jx, 9Mx, 9Nx, 9Px, 9Qx, 9Rx, 9Sx, 9Tx, 9Ux, 9Vx, 9Wx, 9Xx, 9Yx, 9Zx, 6Wx, 6Xx, 7Px, 7Qx, 7Rx, 7Sx, A2x, A3x, A4x, A5x, A6x, A8x, AAx, ABx, ACx, ADx, AEx, AFx, AGx, AHx, AJx, AKx, ALx, AMx, ANx, APx, AQx, ARx, ASx, 7Tx, 7Ux, 7Vx, ATx, AUx, AVx, AWx, AXx, AYx, AZx, B2x, B3x, B4x, B5x, B6x, B7x, B8x, B9x, BAx, BCx, BDx, BEx, BFx, BGx, BHx, BJx, BKx, BMx, BNx, BPx, BQx, BRx, BSx, BTx, BUx, BVx, BWx, BXx, BYx, BZx, C2x, C3x, C4x, C5x, C6x, C7x, C8x, C9x, CFx, CJx, CKx, CLx, CMx, CNx, CPx, CQx, CRx, CSx, CUx, CVx, CWx, CXx, CYx, CZx, D2x, D3x, D5x, D6x, D7x, D8x, D4x, D9x, DAx, DBx, DCx, DDx, DEx, DFx, DGx, DHx • 2873-CTO • 2874-CTO, 32x, 33x, 34x, 36x, 37x, 39x, 3Bx, 3Ex, 3Gx, 3Kx, 46x, 47x, 48x, 49x, 4Ax, 4Bx, 4Cx, 4Fx, 4Jx, 4Kx, 4Lx, 62x, 63x, 64x, 65x, 6Cx, 6Dx, 6Ex, 6Fx, 6Gx, 6Hx, 6Jx, 6Kx, 6Lx, 6Mx, 6Nx, 6Px, 6Qx, 6Rx, 6Sx, 6Vx, 6Zx, 72x, 77x, 78x, 7Bx, 7Px, 7Qx, 7Rx, 7Sx, 7Tx, 7Ux, 7Cx, 7Dx, 7Ex, 7Fx, 7Zx, 82x, 83x, 84x, 85x, 86x, 87x, 88x, 89x, 8Ax, 8Bx, 8Cx • 2875-CTO, 23x, 24x, 25x, 26x, 27x, 28x, 29x, 2Ax, 2Bx, 2Cx, 2Dx, 2Ex, 2Fx, 2Hx, 2Jx, 2Kx, 2Lx, 2Mx, 3Yx, 2Nx, 2Px, 2Qx, 2Rx, 2Sx, 2Tx, 2Wx, 2Xx, 2Zx, 3Zx, 4Ux, 4Vx, 4Wx, 4Xx, 4Yx, 52x, 53x, 54x, 55x, 56x, 57x, 59x, 5Ax, 5Bx, 5Cx, 5Ex, 5Fx, 5Gx, 5Hx, 5Jx, 5Kx, 5Lx, 5Mx, 5Nx, 5Px, 5Qx, 5Rx, 5Sx • 2931-CTO, 25x, 26x, 27x, 28x, 29x, 2Ax, 2Bx • 5072-CTO (to be continued)	42T4755	*

Table 40. Parts list—Overall (continued)

No.	FRU (Overall)	FRU no.	CRU ID
10	(continued) Battery pack, 6 cell Li-ion (2.2 Ah) • 0530-CTO • 0553-CTO, 8Ex • 0585-CTO • 0591-CTO • 4403-CTO • 4404-CTO • 2550-CTO • 2597-CTO • 2598-CTO • 2599-CTO • 4444-CTO, 53x, 54x, 55x, 56x • 4447-CTO	42T4755	*

Table 40. Parts list—Overall (continued)

No.	FRU (Overall)	FRU no.	CRU ID
10	Battery pack, 6 cell Li-ion (2.2 Ah) • 0616-CTO, 22x, 25x, 26x, 27x, 28x, 29x • 2842-CTO, 23x, 24x, 25x, 26x, 27x, 28x, 29x, 2Ax, 2Bx, 2Cx, 2Dx, 2Ex, 7Px, 7Qx, 7Rx, 7Sx, 7Tx, 7Ux, 7Vx, 7Wx, 7Xx, 7Yx, 7Zx, 82x, 83x, 84x, 85x, 86x, 8Rx, AGx, AHx, AJx, AKx, ALx, AMx, ANx, APx, AQx, ARx, ASx, ATx, AUx, AVx, AWx, AXx, AYx, AZx, B2x, B3x, B4x, B5x, B6x, B7x, B8x, B9x, BAx, BBx, BCx, BDx, BEx, BFx, BGx, BHx, BJx, BKx, BMx, BNx, BPx, BQx, BRx, BSx, BTx, BUx, BVx, BWx, BXx, BYx, C5x, C6x, C7x, C8x, C9x, CAx, CBx, CCx, CDx, CEx, CFx, CGx, CHx, CJx, CKx, CLx, CMx, CNx, CPx, CQx, CRx, CSx, CUx, CVx, CWx, CXx, CYx, CZx, D2x, D3x, D4x, D5x, D6x, D7x, D8x, D9x, DAx, DDx, DEx, DFx, DGx, DHx, DJx, DKx, DLx, DMx, DNx, DPx, DQx, DRx, DSx, DTx, DUx, DVx, DWx, DXx, DYx, DZx, E2x, E3x, E4x, E5x, E6x, E7x, E8x, E9x, EAx, F2x, F3x, F4x, F5x, F6x, F7x, F8x, F9x, FAx, FBx, DBx, DCx, EZx, FMx, FNx, FPx, FQx, FSx, FTx, FUx, FVx, FWx, FXx, FYx, FZx, G2x, G3x, G4x, G5x, G6x, G7x, G8x, G9x, GBx, GCx, GDx, GEx, GFx, GGx, GHx, GJx, GKx, GLx, GMx, GNx, GPx, GQx, GRx, GSx, GTx, GUx, GVx, GWx, GXx, H7x, H8x, H9x, HAx, HBx, HCx, HDx, HEx, HJx, HKx, HLx, HMx, HNx, HPx, HRx, HSx, HTx, HUx, HVx, HWx, HXx, HYx, HZx, J2x, J3x, J4x, 5Zx, JFx, JGx, JHx, JJx, JKx, JLx, JMx, JNx, JPx, JQx, JRx, JTx, JUx, JVx, JWx, JXx, K3x, K4x, JSx, KVx, KWx, KXx, KYx, KZx • 2847-CTO, 2Rx, 2Sx, 2Tx, 2Ux, 2Vx, 68x, 69x, 6Ax, 6Bx, 6Cx, 6Dx, 6Ex, 6Fx, 6Gx, 6Hx, 6Jx, 6Kx, 6Lx, 6Mx, 72x, 73x, 74x, 75x, 76x, 77x, 78x, 79x, 7Ex, 7Fx, 7Jx, 7Wx, 7Xx, 7Yx, 7Zx, 82x, 83x, 84x, 85x, 86x, 87x, 88x, 89x, 8Ax, 8Bx, 8Cx, 8Dx, 8Ex, 8Fx, 8Gx, 8Hx, 8Jx, 8Kx, 8Lx, 8Mx, 8Nx, 8Px, 8Ux, 8Vx, 8Wx, 8Xx, 8Yx, 8Zx, Q2x, Q3x, Q4x, Q5x, Q6x, Q7x, Q8x, Q9x, QAx, QBx, QCx, QDx, QEx, QFx, QGx, QHx, QJx, 2Wx, 2Xx, 2Yx, 2Zx, 3Vx, 3Wx, 3Xx, 3Yx, 3Zx, 6Nx, 6Px, 6Qx, 6Ux, 6Vx, 6Yx, 6Zx, 7Dx, 7Kx, 7Lx, 7Mx, 7Nx, 92x, 93x, 94x, 95x, 96x, 97x, 98x, 99x, 9Ax, 9Bx, 9Cx, 9Dx, 9Ex, 9Fx, 9Gx, 9Hx, 9Jx, 9Mx, 9Nx, 9Px, 9Qx, 9Rx, 9Sx, 9Tx, 9Ux, 9Vx, 9Wx, 9Xx, 9Yx, 9Zx, 6Wx, 6Xx, 7Px, 7Qx, 7Rx, 7Sx, A2x, A3x, A4x, A5x, A6x, A8x, AAx, ABx, ACx, ADx, AEx, AFx, AGx, AHx, AJx, AKx, ALx, AMx, ANx, APx, AQx, ARx, ASx, 7Tx, 7Ux, 7Vx, ATx, AUx, AVx, AWx, AXx, AYx, AZx, B2x, B3x, B4x, B5x, B6x, B7x, B8x, B9x, BAx, BCx, BDx, BEx, BFx, BGx, BHx, BJx, BKx, BMx, BNx, BPx, BQx, BRx, BSx, BTx, BUx, BVx, BWx, BXx, BYx, BZx, C2x, C3x, C4x, C5x, C6x, C7x, C8x, C9x, CFx, CJx, CKx, CLx, CMx, CNx, CPx, CQx, CRx, CSx, CUx, CVx, CWx, CXx, CYx, CZx, D2x, D3x, D5x, D6x, D7x, D8x, D4x, D9x, DAx, DBx, DCx, DDx, DEx, DFx, DGx, DHx • 2873-CTO • 2874-CTO, 32x, 33x, 34x, 36x, 37x, 39x, 3Bx, 3Ex, 3Gx, 3Kx, 46x, 47x, 48x, 49x, 4Ax, 4Bx, 4Cx, 4Fx, 4Jx, 4Kx, 4Lx, 62x, 63x, 64x, 65x, 6Cx, 6Dx, 6Ex, 6Fx, 6Gx, 6Hx, 6Jx, 6Kx, 6Lx, 6Mx, 6Nx, 6Px, 6Qx, 6Rx, 6Sx, 6Vx, 6Zx, 72x, 77x, 78x, 7Bx, 7Px, 7Qx, 7Rx, 7Sx, 7Tx, 7Ux, 7Cx, 7Dx, 7Ex, 7Fx, 7Zx, 82x, 83x, 84x, 85x, 86x, 87x, 88x, 89x, 8Ax, 8Bx, 8Cx • 2875-CTO, 23x, 24x, 25x, 26x, 27x, 28x, 29x, 2Ax, 2Bx, 2Cx, 2Dx, 2Ex, 2Fx, 2Hx, 2Jx, 2Kx, 2Lx, 2Mx, 3Yx, 2Nx, 2Px, 2Qx, 2Rx, 2Sx, 2Tx, 2Wx, 2Xx, 2Zx, 3Zx, 4Ux, 4Vx, 4Wx, 4Xx, 4Yx, 52x, 53x, 54x, 55x, 56x, 57x, 59x, 5Ax, 5Bx, 5Cx, 5Ex, 5Fx, 5Gx, 5Hx, 5Jx, 5Kx, 5Lx, 5Mx, 5Nx, 5Px, 5Qx, 5Rx, 5Sx • 2931-CTO, 25x, 26x, 27x, 28x, 29x, 2Ax, 2Bx • 5072-CTO (to be continued)	42T4848	

Table 40. Parts list—Overall (continued)

No.	FRU (Overall)	FRU no.	CRU ID
10	(continued) Battery pack, 6 cell Li-ion (2.2 Ah) • 0530-CTO • 0553-CTO, 8Ex • 0585-CTO • 0591-CTO • 4403-CTO • 4404-CTO • 2550-CTO • 2597-CTO • 2598-CTO • 2599-CTO • 4444-CTO, 53x, 54x, 55x, 56x • 4447-CTO	42T4848	*

Table 40. Parts list—Overall (continued)

No.	FRU (Overall)	FRU no.	CRU ID
10	Battery pack, 6 cell Li-ion (2.2 Ah) • 0616-CTO, 22x, 25x, 26x, 27x, 28x, 29x • 2842-CTO, 23x, 24x, 25x, 26x, 27x, 28x, 29x, 2Ax, 2Bx, 2Cx, 2Dx, 2Ex, 7Px, 7Qx, 7Rx, 7Sx, 7Tx, 7Ux, 7Vx, 7Wx, 7Xx, 7Yx, 7Zx, 82x, 83x, 84x, 85x, 86x, 8Rx, AGx, AHx, AJx, AKx, ALx, AMx, ANx, APx, AQx, ARx, ASx, ATx, AUx, AVx, AWx, AXx, AYx, AZx, B2x, B3x, B4x, B5x, B6x, B7x, B8x, B9x, BAx, BBx, BCx, BDx, BEx, BFx, BGx, BHx, BJx, BKx, BMx, BNx, BPx, BQx, BRx, BSx, BTx, BUx, BVx, BWx, BXx, BYx, C5x, C6x, C7x, C8x, C9x, CAx, CBx, CCx, CDx, CEx, CFx, CGx, CHx, CJx, CKx, CLx, CMx, CNx, CPx, CQx, CRx, CSx, CUx, CVx, CWx, CXx, CYx, CZx, D2x, D3x, D4x, D5x, D6x, D7x, D8x, D9x, DAx, DDx, DEx, DFx, DGx, DHx, DJx, DKx, DLx, DMx, DNx, DPx, DQx, DRx, DSx, DTx, DUx, DVx, DWx, DXx, DYx, DZx, E2x, E3x, E4x, E5x, E6x, E7x, E8x, E9x, EAx, F2x, F3x, F4x, F5x, F6x, F7x, F8x, F9x, FAx, FBx, DBx, DCx, EZx, FMx, FNx, FPx, FQx, FSx, FTx, FUx, FVx, FWx, FXx, FYx, FZx, G2x, G3x, G4x, G5x, G6x, G7x, G8x, G9x, GBx, GCx, GDx, GEx, GFx, GGx, GHx, GJx, GKx, GLx, GMx, GNx, GPx, GQx, GRx, GSx, GTx, GUx, GVx, GWx, GXx, H7x, H8x, H9x, HAx, HBx, HCx, HDx, HEx, HJx, HKx, HLx, HMx, HNx, HPx, HRx, HSx, HTx, HUx, HVx, HWx, HXx, HYx, HZx, J2x, J3x, J4x, 5Zx, JFx, JGx, JHx, JJx, JKx, JLx, JMx, JNx, JPx, JQx, JRx, JTx, JUx, JVx, JWx, JXx, K3x, K4x, JSx, KVx, KWx, KXx, KYx, KZx • 2847-CTO, 2Rx, 2Sx, 2Tx, 2Ux, 2Vx, 68x, 69x, 6Ax, 6Bx, 6Cx, 6Dx, 6Ex, 6Fx, 6Gx, 6Hx, 6Jx, 6Kx, 6Lx, 6Mx, 72x, 73x, 74x, 75x, 76x, 77x, 78x, 79x, 7Ex, 7Fx, 7Jx, 7Wx, 7Xx, 7Yx, 7Zx, 82x, 83x, 84x, 85x, 86x, 87x, 88x, 89x, 8Ax, 8Bx, 8Cx, 8Dx, 8Ex, 8Fx, 8Gx, 8Hx, 8Jx, 8Kx, 8Lx, 8Mx, 8Nx, 8Px, 8Ux, 8Vx, 8Wx, 8Xx, 8Yx, 8Zx, Q2x, Q3x, Q4x, Q5x, Q6x, Q7x, Q8x, Q9x, QAx, QBx, QCx, QDx, QEx, QFx, QGx, QHx, QJx, 2Wx, 2Xx, 2Yx, 2Zx, 3Vx, 3Wx, 3Xx, 3Yx, 3Zx, 6Nx, 6Px, 6Qx, 6Ux, 6Vx, 6Yx, 6Zx, 7Dx, 7Kx, 7Lx, 7Mx, 7Nx, 92x, 93x, 94x, 95x, 96x, 97x, 98x, 99x, 9Ax, 9Bx, 9Cx, 9Dx, 9Ex, 9Fx, 9Gx, 9Hx, 9Jx, 9Mx, 9Nx, 9Px, 9Qx, 9Rx, 9Sx, 9Tx, 9Ux, 9Vx, 9Wx, 9Xx, 9Yx, 9Zx, 6Wx, 6Xx, 7Px, 7Qx, 7Rx, 7Sx, A2x, A3x, A4x, A5x, A6x, A8x, AAx, ABx, ACx, ADx, AEx, AFx, AGx, AHx, AJx, AKx, ALx, AMx, ANx, APx, AQx, ARx, ASx, 7Tx, 7Ux, 7Vx, ATx, AUx, AVx, AWx, AXx, AYx, AZx, B2x, B3x, B4x, B5x, B6x, B7x, B8x, B9x, BAx, BCx, BDx, BEx, BFx, BGx, BHx, BJx, BKx, BMx, BNx, BPx, BQx, BRx, BSx, BTx, BUx, BVx, BWx, BXx, BYx, BZx, C2x, C3x, C4x, C5x, C6x, C7x, C8x, C9x, CFx, CJx, CKx, CLx, CMx, CNx, CPx, CQx, CRx, CSx, CUx, CVx, CWx, CXx, CYx, CZx, D2x, D3x, D5x, D6x, D7x, D8x, D4x, D9x, DAx, DBx, DCx, DDx, DEx, DFx, DGx, DHx • 2873-CTO • 2874-CTO, 32x, 33x, 34x, 36x, 37x, 39x, 3Bx, 3Ex, 3Gx, 3Kx, 46x, 47x, 48x, 49x, 4Ax, 4Bx, 4Cx, 4Fx, 4Jx, 4Kx, 4Lx, 62x, 63x, 64x, 65x, 6Cx, 6Dx, 6Ex, 6Fx, 6Gx, 6Hx, 6Jx, 6Kx, 6Lx, 6Mx, 6Nx, 6Px, 6Qx, 6Rx, 6Sx, 6Vx, 6Zx, 72x, 77x, 78x, 7Bx, 7Px, 7Qx, 7Rx, 7Sx, 7Tx, 7Ux, 7Cx, 7Dx, 7Ex, 7Fx, 7Zx, 82x, 83x, 84x, 85x, 86x, 87x, 88x, 89x, 8Ax, 8Bx, 8Cx • 2875-CTO, 23x, 24x, 25x, 26x, 27x, 28x, 29x, 2Ax, 2Bx, 2Cx, 2Dx, 2Ex, 2Fx, 2Hx, 2Jx, 2Kx, 2Lx, 2Mx, 3Yx, 2Nx, 2Px, 2Qx, 2Rx, 2Sx, 2Tx, 2Wx, 2Xx, 2Zx, 3Zx, 4Ux, 4Vx, 4Wx, 4Xx, 4Yx, 52x, 53x, 54x, 55x, 56x, 57x, 59x, 5Ax, 5Bx, 5Cx, 5Ex, 5Fx, 5Gx, 5Hx, 5Jx, 5Kx, 5Lx, 5Mx, 5Nx, 5Px, 5Qx, 5Rx, 5Sx • 2931-CTO, 25x, 26x, 27x, 28x, 29x, 2Ax, 2Bx • 5072-CTO (to be continued)	42T4757	*

Table 40. Parts list—Overall (continued)

No.	FRU (Overall)	FRU no.	CRU ID
10	(continued) Battery pack, 6 cell Li-ion (2.2 Ah) • 0530-CTO • 0553-CTO, 8Ex • 0585-CTO • 0591-CTO • 4403-CTO • 4404-CTO • 2550-CTO • 2597-CTO • 2598-CTO • 2599-CTO • 4444-CTO, 53x, 54x, 55x, 56x • 4447-CTO	42T4757	*
10	Battery pack, 6 cell Li-ion (2.4 Ah) • 2842-CTO, 22x, 33x, 35x, 36x, 37x, 39x, 3Bx, 3Dx, 3Fx, 3Hx, 3Qx, 3Sx, 3Tx, 3Ux, 3Vx, 42x, 43x, 44x, 45x, 47x, 48x, 49x, 4Ax, 4Bx, 4Cx, 4Dx, 4Ex, 4Fx, 4Gx, 4Hx, 4Jx, 4Kx, 4Lx, 4Mx, 4Nx, 4Px, 4Qx, 4Rx, 4Sx, 4Tx, 4Ux, 4Vx, 4Wx, 4Xx, 4Yx, 4Zx, 52x, 53x, 54x, 55x, 56x, 57x, 58x, 59x, 5Ax, 5Bx, 5Cx, 5Dx, 5Ex, 5Fx, 5Gx, 5Hx, 5Jx, 5Kx, 5Lx, 5Mx, 5Nx, 5Px, 5Qx, 5Rx, 5Sx, 5Tx, 5Ux, 5Vx, 5Wx, 5Xx, 5Yx, 5Zx, 62x, 63x, 64x, 65x, 78x, 7Bx, 7Cx, 7Dx, 7Ex, 7Fx, 7Gx, 7Hx, 7Jx • 2847-CTO, 24x, 25x, 26x, 27x, 28x, 29x, 2Ax, 2Bx, 2Cx, 2Dx, 2Ex, 2Fx, 2Gx, 2Hx, 2Jx, 2Kx, 2Lx, 2Mx, 2Nx, 2Px, 2Qx, 34x, 35x, 36x, 37x, 38x, 39x, 3Dx, 3Ex, 3Kx, 3Mx, 3Nx, 3Px, 3Qx, 42x, 43x, 44x, 45x, 46x, 47x, 48x, 49x, 4Ax, 4Bx, 4Cx, 4Dx, 4Ex, 4Fx, 4Gx, 4Hx, 4Nx, 4Px, 4Qx, 4Rx, 4Sx, 4Tx, 4Ux, 4Vx, 4Wx, 4Xx, 4Yx, 4Zx, 52x, 53x, 54x, 55x, 56x, 57x, 58x, 59x, 5Ax, 5Bx, 5Cx, 5Dx, 5Ex, 5Fx, 5Gx • 2873-CTO, 22x, 32x, 33x • 2874-CTO, 32x, 33x, 34x, 36x, 37x, 39x, 3Bx, 3Ex, 3Gx, 3Kx, 46x, 47x, 48x, 49x, 4Ax, 4Bx, 4Cx, 4Fx, 4Jx, 4Kx, 4Lx • 2875-CTO, 32x, 33x, 36x, 39x, 3Ax, 3Mx, 3Px, 3Wx, 3Xx, 42x, 43x, 44x, 45x, 46x, 47x, 48x, 49x, 4Ax, 4Bx, 4Cx, 4Dx, 4Ex, 4Fx, 4Gx, 4Hx, 4Jx, 4Kx, 4Mx • 2931-CTO, 23x, 24x	42T4702	*
10	Battery pack, 6 cell Li-ion (2.4 Ah) • 2842-CTO, 22x, 33x, 35x, 36x, 37x, 39x, 3Bx, 3Dx, 3Fx, 3Hx, 3Qx, 3Sx, 3Tx, 3Ux, 3Vx, 42x, 43x, 44x, 45x, 47x, 48x, 49x, 4Ax, 4Bx, 4Cx, 4Dx, 4Ex, 4Fx, 4Gx, 4Hx, 4Jx, 4Kx, 4Lx, 4Mx, 4Nx, 4Px, 4Qx, 4Rx, 4Sx, 4Tx, 4Ux, 4Vx, 4Wx, 4Xx, 4Yx, 4Zx, 52x, 53x, 54x, 55x, 56x, 57x, 58x, 59x, 5Ax, 5Bx, 5Cx, 5Dx, 5Ex, 5Fx, 5Gx, 5Hx, 5Jx, 5Kx, 5Lx, 5Mx, 5Nx, 5Px, 5Qx, 5Rx, 5Sx, 5Tx, 5Ux, 5Vx, 5Wx, 5Xx, 5Yx, 5Zx, 62x, 63x, 64x, 65x, 78x, 7Bx, 7Cx, 7Dx, 7Ex, 7Fx, 7Gx, 7Hx, 7Jx • 2847-CTO, 24x, 25x, 26x, 27x, 28x, 29x, 2Ax, 2Bx, 2Cx, 2Dx, 2Ex, 2Fx, 2Gx, 2Hx, 2Jx, 2Kx, 2Lx, 2Mx, 2Nx, 2Px, 2Qx, 34x, 35x, 36x, 37x, 38x, 39x, 3Dx, 3Ex, 3Kx, 3Mx, 3Nx, 3Px, 3Qx, 42x, 43x, 44x, 45x, 46x, 47x, 48x, 49x, 4Ax, 4Bx, 4Cx, 4Dx, 4Ex, 4Fx, 4Gx, 4Hx, 4Nx, 4Px, 4Qx, 4Rx, 4Sx, 4Tx, 4Ux, 4Vx, 4Wx, 4Xx, 4Yx, 4Zx, 52x, 53x, 54x, 55x, 56x, 57x, 58x, 59x, 5Ax, 5Bx, 5Cx, 5Dx, 5Ex, 5Fx, 5Gx • 2873-CTO, 22x, 32x, 33x • 2874-CTO, 32x, 33x, 34x, 36x, 37x, 39x, 3Bx, 3Ex, 3Gx, 3Kx, 46x, 47x, 48x, 49x, 4Ax, 4Bx, 4Cx, 4Fx, 4Jx, 4Kx, 4Lx • 2875-CTO, 32x, 33x, 36x, 39x, 3Ax, 3Mx, 3Px, 3Wx, 3Xx, 42x, 43x, 44x, 45x, 46x, 47x, 48x, 49x, 4Ax, 4Bx, 4Cx, 4Dx, 4Ex, 4Fx, 4Gx, 4Hx, 4Jx, 4Kx, 4Mx • 2931-CTO, 23x, 24x	42T4704	*

Table 40. Parts list—Overall (continued)

No.	FRU (Overall)	FRU no.	CRU ID
10	Battery pack, 6 cell Li-ion (2.4 Ah) • 2842-CTO, 22x, 33x, 35x, 36x, 37x, 39x, 3Bx, 3Dx, 3Fx, 3Hx, 3Qx, 3Sx, 3Tx, 3Ux, 3Vx, 42x, 43x, 44x, 45x, 47x, 48x, 49x, 4Ax, 4Bx, 4Cx, 4Dx, 4Ex, 4Fx, 4Gx, 4Hx, 4Jx, 4Kx, 4Lx, 4Mx, 4Nx, 4Px, 4Qx, 4Rx, 4Sx, 4Tx, 4Ux, 4Vx, 4Wx, 4Xx, 4Yx, 4Zx, 52x, 53x, 54x, 55x, 56x, 57x, 58x, 59x, 5Ax, 5Bx, 5Cx, 5Dx, 5Ex, 5Fx, 5Gx, 5Hx, 5Jx, 5Kx, 5Lx, 5Mx, 5Nx, 5Px, 5Qx, 5Rx, 5Sx, 5Tx, 5Ux, 5Vx, 5Wx, 5Xx, 5Yx, 5Zx, 62x, 63x, 64x, 65x, 78x, 7Bx, 7Cx, 7Dx, 7Ex, 7Fx, 7Gx, 7Hx, 7Jx • 2847-CTO, 24x, 25x, 26x, 27x, 28x, 29x, 2Ax, 2Bx, 2Cx, 2Dx, 2Ex, 2Fx, 2Gx, 2Hx, 2Jx, 2Kx, 2Lx, 2Mx, 2Nx, 2Px, 2Qx, 34x, 35x, 36x, 37x, 38x, 39x, 3Dx, 3Ex, 3Kx, 3Mx, 3Nx, 3Px, 3Qx, 42x, 43x, 44x, 45x, 46x, 47x, 48x, 49x, 4Ax, 4Bx, 4Cx, 4Dx, 4Ex, 4Fx, 4Gx, 4Hx, 4Nx, 4Px, 4Qx, 4Rx, 4Sx, 4Tx, 4Ux, 4Vx, 4Wx, 4Xx, 4Yx, 4Zx, 52x, 53x, 54x, 55x, 56x, 57x, 58x, 59x, 5Ax, 5Bx, 5Cx, 5Dx, 5Ex, 5Fx, 5Gx • 2873-CTO, 22x, 32x, 33x • 2874-CTO, 32x, 33x, 34x, 36x, 37x, 39x, 3Bx, 3Ex, 3Gx, 3Kx, 46x, 47x, 48x, 49x, 4Ax, 4Bx, 4Cx, 4Fx, 4Jx, 4Kx, 4Lx • 2875-CTO, 32x, 33x, 36x, 39x, 3Ax, 3Mx, 3Px, 3Wx, 3Xx, 42x, 43x, 44x, 45x, 46x, 47x, 48x, 49x, 4Ax, 4Bx, 4Cx, 4Dx, 4Ex, 4Fx, 4Gx, 4Hx, 4Jx, 4Kx, 4Mx • 2931-CTO, 23x, 24x	42T4706	*
10	Battery pack, 6 cell Li-ion (2.4 Ah) • 2842-CTO, 22x, 33x, 35x, 36x, 37x, 39x, 3Bx, 3Dx, 3Fx, 3Hx, 3Qx, 3Sx, 3Tx, 3Ux, 3Vx, 42x, 43x, 44x, 45x, 47x, 48x, 49x, 4Ax, 4Bx, 4Cx, 4Dx, 4Ex, 4Fx, 4Gx, 4Hx, 4Jx, 4Kx, 4Lx, 4Mx, 4Nx, 4Px, 4Qx, 4Rx, 4Sx, 4Tx, 4Ux, 4Vx, 4Wx, 4Xx, 4Yx, 4Zx, 52x, 53x, 54x, 55x, 56x, 57x, 58x, 59x, 5Ax, 5Bx, 5Cx, 5Dx, 5Ex, 5Fx, 5Gx, 5Hx, 5Jx, 5Kx, 5Lx, 5Mx, 5Nx, 5Px, 5Qx, 5Rx, 5Sx, 5Tx, 5Ux, 5Vx, 5Wx, 5Xx, 5Yx, 5Zx, 62x, 63x, 64x, 65x, 78x, 7Bx, 7Cx, 7Dx, 7Ex, 7Fx, 7Gx, 7Hx, 7Jx • 2847-CTO, 24x, 25x, 26x, 27x, 28x, 29x, 2Ax, 2Bx, 2Cx, 2Dx, 2Ex, 2Fx, 2Gx, 2Hx, 2Jx, 2Kx, 2Lx, 2Mx, 2Nx, 2Px, 2Qx, 34x, 35x, 36x, 37x, 38x, 39x, 3Dx, 3Ex, 3Kx, 3Mx, 3Nx, 3Px, 3Qx, 42x, 43x, 44x, 45x, 46x, 47x, 48x, 49x, 4Ax, 4Bx, 4Cx, 4Dx, 4Ex, 4Fx, 4Gx, 4Hx, 4Nx, 4Px, 4Qx, 4Rx, 4Sx, 4Tx, 4Ux, 4Vx, 4Wx, 4Xx, 4Yx, 4Zx, 52x, 53x, 54x, 55x, 56x, 57x, 58x, 59x, 5Ax, 5Bx, 5Cx, 5Dx, 5Ex, 5Fx, 5Gx • 2873-CTO, 22x, 32x, 33x • 2874-CTO, 32x, 33x, 34x, 36x, 37x, 39x, 3Bx, 3Ex, 3Gx, 3Kx, 46x, 47x, 48x, 49x, 4Ax, 4Bx, 4Cx, 4Fx, 4Jx, 4Kx, 4Lx • 2875-CTO, 32x, 33x, 36x, 39x, 3Ax, 3Mx, 3Px, 3Wx, 3Xx, 42x, 43x, 44x, 45x, 46x, 47x, 48x, 49x, 4Ax, 4Bx, 4Cx, 4Dx, 4Ex, 4Fx, 4Gx, 4Hx, 4Jx, 4Kx, 4Mx • 2931-CTO, 23x, 24x	42T4849	*
10	Battery pack, 6 cell Li-ion (2.4 Ah) • 2842-CTO, 22x, 33x, 35x, 36x, 37x, 39x, 3Bx, 3Dx, 3Fx, 3Hx, 3Qx, 3Sx, 3Tx, 3Ux, 3Vx, 42x, 43x, 44x, 45x, 47x, 48x, 49x, 4Ax, 4Bx, 4Cx, 4Dx, 4Ex, 4Fx, 4Gx, 4Hx, 4Jx, 4Kx, 4Lx, 4Mx, 4Nx, 4Px, 4Qx, 4Rx, 4Sx, 4Tx, 4Ux, 4Vx, 4Wx, 4Xx, 4Yx, 4Zx, 52x, 53x, 54x, 55x, 56x, 57x, 58x, 59x, 5Ax, 5Bx, 5Cx, 5Dx, 5Ex, 5Fx, 5Gx, 5Hx, 5Jx, 5Kx, 5Lx, 5Mx, 5Nx, 5Px, 5Qx, 5Rx, 5Sx, 5Tx, 5Ux, 5Vx, 5Wx, 5Xx, 5Yx, 5Zx, 62x, 63x, 64x, 65x, 78x, 7Bx, 7Cx, 7Dx, 7Ex, 7Fx, 7Gx, 7Hx, 7Jx • 2847-CTO, 24x, 25x, 26x, 27x, 28x, 29x, 2Ax, 2Bx, 2Cx, 2Dx, 2Ex, 2Fx, 2Gx, 2Hx, 2Jx, 2Kx, 2Lx, 2Mx, 2Nx, 2Px, 2Qx, 34x, 35x, 36x, 37x, 38x, 39x, 3Dx, 3Ex, 3Kx, 3Mx, 3Nx, 3Px, 3Qx, 42x, 43x, 44x, 45x, 46x, 47x, 48x, 49x, 4Ax, 4Bx, 4Cx, 4Dx, 4Ex, 4Fx, 4Gx, 4Hx, 4Nx, 4Px, 4Qx, 4Rx, 4Sx, 4Tx, 4Ux, 4Vx, 4Wx, 4Xx, 4Yx, 4Zx, 52x, 53x, 54x, 55x, 56x, 57x, 58x, 59x, 5Ax, 5Bx, 5Cx, 5Dx, 5Ex, 5Fx, 5Gx • 2873-CTO, 22x, 32x, 33x • 2874-CTO, 32x, 33x, 34x, 36x, 37x, 39x, 3Bx, 3Ex, 3Gx, 3Kx, 46x, 47x, 48x, 49x, 4Ax, 4Bx, 4Cx, 4Fx, 4Jx, 4Kx, 4Lx • 2875-CTO, 32x, 33x, 36x, 39x, 3Ax, 3Mx, 3Px, 3Wx, 3Xx, 42x, 43x, 44x, 45x, 46x, 47x, 48x, 49x, 4Ax, 4Bx, 4Cx, 4Dx, 4Ex, 4Fx, 4Gx, 4Hx, 4Jx, 4Kx, 4Mx • 2931-CTO, 23x, 24x	42T4708	*

Table 40. Parts list—Overall (continued)

No.	FRU (Overall)	FRU no.	CRU ID
10	Battery pack, 6 cell Li-ion (2.6 Ah) • 2842-CTO • 2847-CTO • 2873-CTO • 2874-CTO • 2875-CTO • 2931-CTO	42T4731	*
10	Battery pack, 6 cell Li-ion (2.6 Ah) • 2842-CTO • 2847-CTO • 2873-CTO • 2874-CTO • 2875-CTO • 2931-CTO	42T4735	*
10	Battery pack, 6 cell Li-ion (2.6 Ah) • 2842-CTO • 2847-CTO • 2873-CTO • 2874-CTO • 2875-CTO • 2931-CTO	42T4850	*
10	Battery pack, 6 cell Li-ion (2.6 Ah) • 2842-CTO • 2847-CTO • 2873-CTO • 2874-CTO • 2875-CTO • 2931-CTO	42T4737	*
10	Battery pack, 6 cell Li-ion (2.6 Ah) • 2842-CTO • 2847-CTO • 2873-CTO • 2874-CTO • 2875-CTO • 2931-CTO	42T4733	*

Table 40. Parts list—Overall (continued)

No.	FRU (Overall)	FRU no.	CRU ID
10	Battery pack, 6 cell Li-ion (2.6 Ah) dual-mode • 0530-CTO, 22x, 32x, 52x, 53x, 54x, 55x, 56x, 57x, 59x, 5Ax, 5Bx, 5Cx, 5Dx, 5Ex, 5Fx, 5Gx, 5Kx, 5Wx, 5Xx, 5Zx, 62x, 63x, 64x, 65x, 66x, 67x, 68x, 69x, 6Ax, 6Bx, 6Cx, 6Dx, 6Ex, 6Fx, 6Gx, 6Hx, 6Jx, 6Kx, 6Lx, 6Mx, 6Nx • 0553-CTO, 22x, 33x, 35x, 36x, 42x, 43x, 44x, 52x, 53x, 55x, 56x, 57x, 58x, 59x, 5Ax, 5Bx, 5Cx, 5Dx, 5Fx, 5Gx, 5Hx, 5Jx, 5Kx, 5Lx, 5Mx, 5Nx, 5Px, 5Qx, 5Rx, 5Tx, 5Ux, 5Vx, 5Wx, 5Xx, 5Yx, 6Cx, 6Dx, 6Fx, 6Gx, 6Hx, 6Jx, 6Kx, 6Lx, 6Mx, 6Nx, 6Px, 6Qx, 6Rx, 6Sx, 6Tx, 6Ux, 6Vx, 6Wx, 74x, 76x, 77x, 78x, 79x, 7Ax, 7Bx, 7Cx, 7Dx, 7Ex, 7Fx, 7Gx, 7Hx, 7Jx, 7Kx, 7Lx, 7Mx, 7Nx, 7Px, 7Qx, 7Rx, 7Sx, 7Tx, 7Ux, 7Vx, 7Wx, 7Xx, 7Yx, 7Zx, 82x, 83x, 84x, 85x, 86x, 87x, 88x, 89x, 8Ax, 8Bx, 8Cx, 8Dx, R2x, R3x • 0585-CTO, 42x, 43x, 44x, 52x, 53x, 54x, 55x, 56x, 57x, 58x, 59x, 5Ax, 5Bx, 5Dx, 5Fx, 5Hx, 5Kx, 5Mx, 5Px, 5Rx, 5Tx, 5Vx, 5Yx, 64x, 65x, 66x, 67x, 68x, 69x, 6Ax, 6Bx, 6Cx, 6Dx, 6Ex, 6Fx, 6Gx, 6Hx, 6Jx, 6Kx, 6Lx, 6Mx, 6Nx, 6Px, 6Qx, 6Rx, 6Sx, 6Tx, 6Ux, 74x, 76x, 77x • 0591-CTO, 52x, 53x • 4403-CTO, 32x, 33x, 34x, 35x, 36x, 37x, 38x, 39x, 3Ax, 3Bx, 3Cx, 3Dx, 3Ex, 3Fx, 3Gx, 3Hx, 3Jx, 3Kx, 3Lx, 3Mx, 3Nx, 3Px, 3Qx, 3Rx, 3Sx, 3Tx, 3Ux, 3Vx, 3Wx, 3Xx, 3Yx, 3Zx, 42x, 43x, 44x, 45x, 46x, 47x, 48x, 49x, 4Ax, 4Bx, 4Cx, 4Dx, 4Ex, 4Fx, 4Gx, 4Hx, 4Jx, 4Kx, 4Lx, 4Mx, 4Nx, 4Px, 4Rx, 4Sx, 4Tx, 4Ux, 4Vx, 4Wx, 4Xx, 4Yx, 4Zx, 52x, 53x, 54x, 55x, 56x, 57x, 59x, 5Ax, 5Bx, 5Cx, 5Dx, 5Ex, 5Fx, 5Gx, 5Hx, 5Jx, 5Kx, 5Lx, 5Mx, 5Nx, 5Px, 5Qx, 5Rx, 5Sx, 5Tx, 5Ux, 5Vx, 5Wx, 5Xx, 5Yx, 5Zx, 62x, 63x, 64x, 65x, 66x, 67x, 68x, 69x, 6Ax, 6Bx, 6Cx, 6Dx, 6Ex, 6Fx, 6Gx, 6Hx, 6Jx, 6Kx, 6Lx, 6Mx, 6Nx, 6Px, 6Qx, 6Rx, 6Sx, 6Tx, 6Ux, 6Vx, 6Wx, 6Xx, 6Yx, 6Zx, 72x, 73x, 74x, 75x, 76x, 77x • 4404-CTO, 32x, 33x, 34x, 35x, 36x, 37x, 38x, 39x, 3Ax, 3Bx, 3Cx, 3Dx, 3Ex, 3Fx, 3Mx, 3Nx, 3Px, 3Qx, 3Rx, 3Sx, 3Tx, 3Ux, 3Vx, 3Wx, 3Xx, 3Yx, 3Zx, 42x, 43x, 44x, 45x, 46x, 47x, 48x, 49x, 4Ax, 4Bx, 4Cx, 4Dx, 4Ex, 4Fx, 4Gx, 4Hx, 4Jx, 4Kx, 4Lx, 4Mx, 4Nx, 4Px, 4Qx, 4Rx, 4Sx, 4Tx, 4Ux, 4Vx, 4Wx, 4Xx, 4Yx, 4Zx • 2550-CTO, 42x, 43x, 44x, 52x, 53x, 54x, 55x, 57x, 58x, 59x, 5Ax, 5Bx, 5Dx, 5Fx, 5Hx, 5Kx, 5Mx, 5Px, 5Rx, 5Tx, 5Vx, 5Xx, 5Yx, 5Zx, 62x, 63x, 64x, 65x, 66x, 67x, 68x, 69x, 6Ax, 6Nx • 2597-CTO, 22x, 32x, 52x, 53x, 54x, 55x, 56x, 58x, 59x, 5Ax, 5Bx, 5Cx, 5Dx, 5Ex, 5Fx, 5Rx, 5Sx, 5Tx, 5Vx, 5Wx, 5Xx, 5Yx, 5Zx, 62x, 63x, 64x, 65x, 66x, 67x, 68x, 69x, 6Ax, 6Bx, 6Cx, 6Dx, 6Ex, 6Fx, 6Gx, 6Hx, 6Jx, 6Kx, 6Lx, 6Mx, 6Nx, 6Px, 6Qx • 2598-CTO, 22x, 33x, 34x, 35x, 42x, 43x, 44x, 52x, 53x, 54x, 55x, 56x, 57x, 58x, 59x, 5Ax, 5Bx, 5Cx, 5Dx, 5Ex, 5Fx, 5Gx, 5Hx, 5Jx, 5Kx, 5Lx, 5Mx, 5Nx, 5Px, 5Qx, 5Rx, 5Sx, 5Tx, 5Vx, 5Wx, 5Xx, 5Yx, 5Zx, 62x, 63x, 64x, 65x, 66x, 6Gx, 6Jx, 6Kx, 6Lx, 6Nx, 6Px, 6Qx, 6Rx, 6Xx, 6Yx, 6Zx, 72x, 73x, 74x, 75x, 76x, 77x, 78x, 79x, 7Ax, 7Bx, 7Cx, 7Dx, 7Ex, 7Fx, 7Gx, 7Hx, 7Jx, 7Kx, 7Qx, 7Rx, 7Sx, 7Tx, 7Ux, 7Vx, 7Wx, 7Xx, 7Yx, 7Zx, 82x, 83x, 84x, 85x, R2x, R3x • 2599-CTO, 52x, 53x • 4444-CTO, 32x, 33x, 34x, 35x, 36x, 37x, 38x, 39x, 3Ax, 3Bx, 3Cx, 3Dx, 3Ex, 3Fx, 3Gx, 3Hx, 3Jx, 3Kx, 3Lx, 3Px, 3Rx, 3Sx, 3Tx, 3Ux, 3Vx, 3Wx, 3Yx, 3Zx, 42x, 43x, 44x, 45x, 46x, 47x, 48x, 49x, 4Ax, 4Bx, 4Cx, 4Dx, 4Ex, 4Fx, 4Gx, 4Hx, 4Jx, 4Kx, 4Lx, 4Mx, 4Nx, 4Px, 4Qx, 4Rx, 4Sx, 4Tx, 4Ux, 4Vx, 4Wx, 4Xx, 4Yx, 4Zx, 52x, 57x, 58x, 59x, 5Ax, 5Bx, 5Cx, 5Dx, 5Ex • 4447-CTO, 32x, 33x, 34x, 35x, 36x, 37x, 38x, 39x, 3Ax, 3Bx, 3Cx, 3Dx, 3Ex, 3Hx, 7Lx, 7Mx, 7Nx, 7Px	42T4791	*

Table 40. Parts list—Overall (continued)

No.	FRU (Overall)	FRU no.	CRU ID
10	Battery pack, 6 cell Li-ion (2.6 Ah) dual-mode • 0530-CTO, 22x, 32x, 52x, 53x, 54x, 55x, 56x, 57x, 59x, 5Ax, 5Bx, 5Cx, 5Dx, 5Ex, 5Fx, 5Gx, 5Kx, 5Wx, 5Xx, 5Zx, 62x, 63x, 64x, 65x, 66x, 67x, 68x, 69x, 6Ax, 6Bx, 6Cx, 6Dx, 6Ex, 6Fx, 6Gx, 6Hx, 6Jx, 6Kx, 6Lx, 6Mx, 6Nx • 0553-CTO, 22x, 33x, 35x, 36x, 42x, 43x, 44x, 52x, 53x, 55x, 56x, 57x, 58x, 59x, 5Ax, 5Bx, 5Cx, 5Dx, 5Fx, 5Gx, 5Hx, 5Jx, 5Kx, 5Lx, 5Mx, 5Nx, 5Px, 5Qx, 5Rx, 5Tx, 5Ux, 5Vx, 5Wx, 5Xx, 5Yx, 6Cx, 6Dx, 6Fx, 6Gx, 6Hx, 6Jx, 6Kx, 6Lx, 6Mx, 6Nx, 6Px, 6Qx, 6Rx, 6Sx, 6Tx, 6Ux, 6Vx, 6Wx, 74x, 76x, 77x, 78x, 79x, 7Ax, 7Bx, 7Cx, 7Dx, 7Ex, 7Fx, 7Gx, 7Hx, 7Jx, 7Kx, 7Lx, 7Mx, 7Nx, 7Px, 7Qx, 7Rx, 7Sx, 7Tx, 7Ux, 7Vx, 7Wx, 7Xx, 7Yx, 7Zx, 82x, 83x, 84x, 85x, 86x, 87x, 88x, 89x, 8Ax, 8Bx, 8Cx, 8Dx, R2x, R3x • 0585-CTO, 42x, 43x, 44x, 52x, 53x, 54x, 55x, 56x, 57x, 58x, 59x, 5Ax, 5Bx, 5Dx, 5Fx, 5Hx, 5Kx, 5Mx, 5Px, 5Rx, 5Tx, 5Vx, 5Yx, 64x, 65x, 66x, 67x, 68x, 69x, 6Ax, 6Bx, 6Cx, 6Dx, 6Ex, 6Fx, 6Gx, 6Hx, 6Jx, 6Kx, 6Lx, 6Mx, 6Nx, 6Px, 6Qx, 6Rx, 6Sx, 6Tx, 6Ux, 74x, 76x, 77x • 0591-CTO, 52x, 53x • 4403-CTO, 32x, 33x, 34x, 35x, 36x, 37x, 38x, 39x, 3Ax, 3Bx, 3Cx, 3Dx, 3Ex, 3Fx, 3Gx, 3Hx, 3Jx, 3Kx, 3Lx, 3Mx, 3Nx, 3Px, 3Qx, 3Rx, 3Sx, 3Tx, 3Ux, 3Vx, 3Wx, 3Xx, 3Yx, 3Zx, 42x, 43x, 44x, 45x, 46x, 47x, 48x, 49x, 4Ax, 4Bx, 4Cx, 4Dx, 4Ex, 4Fx, 4Gx, 4Hx, 4Jx, 4Kx, 4Lx, 4Mx, 4Nx, 4Px, 4Rx, 4Sx, 4Tx, 4Ux, 4Vx, 4Wx, 4Xx, 4Yx, 4Zx, 52x, 53x, 54x, 55x, 56x, 57x, 59x, 5Ax, 5Bx, 5Cx, 5Dx, 5Ex, 5Fx, 5Gx, 5Hx, 5Jx, 5Kx, 5Lx, 5Mx, 5Nx, 5Px, 5Qx, 5Rx, 5Sx, 5Tx, 5Ux, 5Vx, 5Wx, 5Xx, 5Yx, 5Zx, 62x, 63x, 64x, 65x, 66x, 67x, 68x, 69x, 6Ax, 6Bx, 6Cx, 6Dx, 6Ex, 6Fx, 6Gx, 6Hx, 6Jx, 6Kx, 6Lx, 6Mx, 6Nx, 6Px, 6Qx, 6Rx, 6Sx, 6Tx, 6Ux, 6Vx, 6Wx, 6Xx, 6Yx, 6Zx, 72x, 73x, 74x, 75x, 76x, 77x • 4404-CTO, 32x, 33x, 34x, 35x, 36x, 37x, 38x, 39x, 3Ax, 3Bx, 3Cx, 3Dx, 3Ex, 3Fx, 3Mx, 3Nx, 3Px, 3Qx, 3Rx, 3Sx, 3Tx, 3Ux, 3Vx, 3Wx, 3Xx, 3Yx, 3Zx, 42x, 43x, 44x, 45x, 46x, 47x, 48x, 49x, 4Ax, 4Bx, 4Cx, 4Dx, 4Ex, 4Fx, 4Gx, 4Hx, 4Jx, 4Kx, 4Lx, 4Mx, 4Nx, 4Px, 4Qx, 4Rx, 4Sx, 4Tx, 4Ux, 4Vx, 4Wx, 4Xx, 4Yx, 4Zx • 2550-CTO, 42x, 43x, 44x, 52x, 53x, 54x, 55x, 57x, 58x, 59x, 5Ax, 5Bx, 5Dx, 5Fx, 5Hx, 5Kx, 5Mx, 5Px, 5Rx, 5Tx, 5Vx, 5Xx, 5Yx, 5Zx, 62x, 63x, 64x, 65x, 66x, 67x, 68x, 69x, 6Ax, 6Nx • 2597-CTO, 22x, 32x, 52x, 53x, 54x, 55x, 56x, 58x, 59x, 5Ax, 5Bx, 5Cx, 5Dx, 5Ex, 5Fx, 5Rx, 5Sx, 5Tx, 5Vx, 5Wx, 5Xx, 5Yx, 5Zx, 62x, 63x, 64x, 65x, 66x, 67x, 68x, 69x, 6Ax, 6Bx, 6Cx, 6Dx, 6Ex, 6Fx, 6Gx, 6Hx, 6Jx, 6Kx, 6Lx, 6Mx, 6Nx, 6Px, 6Qx • 2598-CTO, 22x, 33x, 34x, 35x, 42x, 43x, 44x, 52x, 53x, 54x, 55x, 56x, 57x, 58x, 59x, 5Ax, 5Bx, 5Cx, 5Dx, 5Ex, 5Fx, 5Gx, 5Hx, 5Jx, 5Kx, 5Lx, 5Mx, 5Nx, 5Px, 5Qx, 5Rx, 5Sx, 5Tx, 5Vx, 5Wx, 5Xx, 5Yx, 5Zx, 62x, 63x, 64x, 65x, 66x, 6Gx, 6Jx, 6Kx, 6Lx, 6Nx, 6Px, 6Qx, 6Rx, 6Xx, 6Yx, 6Zx, 72x, 73x, 74x, 75x, 76x, 77x, 78x, 79x, 7Ax, 7Bx, 7Cx, 7Dx, 7Ex, 7Fx, 7Gx, 7Hx, 7Jx, 7Kx, 7Qx, 7Rx, 7Sx, 7Tx, 7Ux, 7Vx, 7Wx, 7Xx, 7Yx, 7Zx, 82x, 83x, 84x, 85x, R2x, R3x • 2599-CTO, 52x, 53x • 4444-CTO, 32x, 33x, 34x, 35x, 36x, 37x, 38x, 39x, 3Ax, 3Bx, 3Cx, 3Dx, 3Ex, 3Fx, 3Gx, 3Hx, 3Jx, 3Kx, 3Lx, 3Px, 3Rx, 3Sx, 3Tx, 3Ux, 3Vx, 3Wx, 3Yx, 3Zx, 42x, 43x, 44x, 45x, 46x, 47x, 48x, 49x, 4Ax, 4Bx, 4Cx, 4Dx, 4Ex, 4Fx, 4Gx, 4Hx, 4Jx, 4Kx, 4Lx, 4Mx, 4Nx, 4Px, 4Qx, 4Rx, 4Sx, 4Tx, 4Ux, 4Vx, 4Wx, 4Xx, 4Yx, 4Zx, 52x, 57x, 58x, 59x, 5Ax, 5Bx, 5Cx, 5Dx, 5Ex • 4447-CTO, 32x, 33x, 34x, 35x, 36x, 37x, 38x, 39x, 3Ax, 3Bx, 3Cx, 3Dx, 3Ex, 3Hx, 7Lx, 7Mx, 7Nx, 7Px	42T4793	*

Table 40. Parts list—Overall (continued)

No.	FRU (Overall)	FRU no.	CRU ID
10	Battery pack, 6 cell Li-ion (2.6 Ah) dual-mode • 0530-CTO, 22x, 32x, 52x, 53x, 54x, 55x, 56x, 57x, 59x, 5Ax, 5Bx, 5Cx, 5Dx, 5Ex, 5Fx, 5Gx, 5Kx, 5Wx, 5Xx, 5Zx, 62x, 63x, 64x, 65x, 66x, 67x, 68x, 69x, 6Ax, 6Bx, 6Cx, 6Dx, 6Ex, 6Fx, 6Gx, 6Hx, 6Jx, 6Kx, 6Lx, 6Mx, 6Nx • 0553-CTO, 22x, 33x, 35x, 36x, 42x, 43x, 44x, 52x, 53x, 55x, 56x, 57x, 58x, 59x, 5Ax, 5Bx, 5Cx, 5Dx, 5Fx, 5Gx, 5Hx, 5Jx, 5Kx, 5Lx, 5Mx, 5Nx, 5Px, 5Qx, 5Rx, 5Tx, 5Ux, 5Vx, 5Wx, 5Xx, 5Yx, 6Cx, 6Dx, 6Fx, 6Gx, 6Hx, 6Jx, 6Kx, 6Lx, 6Mx, 6Nx, 6Px, 6Qx, 6Rx, 6Sx, 6Tx, 6Ux, 6Vx, 6Wx, 74x, 76x, 77x, 78x, 79x, 7Ax, 7Bx, 7Cx, 7Dx, 7Ex, 7Fx, 7Gx, 7Hx, 7Jx, 7Kx, 7Lx, 7Mx, 7Nx, 7Px, 7Qx, 7Rx, 7Sx, 7Tx, 7Ux, 7Vx, 7Wx, 7Xx, 7Yx, 7Zx, 82x, 83x, 84x, 85x, 86x, 87x, 88x, 89x, 8Ax, 8Bx, 8Cx, 8Dx, R2x, R3x • 0585-CTO, 42x, 43x, 44x, 52x, 53x, 54x, 55x, 56x, 57x, 58x, 59x, 5Ax, 5Bx, 5Dx, 5Fx, 5Hx, 5Kx, 5Mx, 5Px, 5Rx, 5Tx, 5Vx, 5Yx, 64x, 65x, 66x, 67x, 68x, 69x, 6Ax, 6Bx, 6Cx, 6Dx, 6Ex, 6Fx, 6Gx, 6Hx, 6Jx, 6Kx, 6Lx, 6Mx, 6Nx, 6Px, 6Qx, 6Rx, 6Sx, 6Tx, 6Ux, 74x, 76x, 77x • 0591-CTO, 52x, 53x • 4403-CTO, 32x, 33x, 34x, 35x, 36x, 37x, 38x, 39x, 3Ax, 3Bx, 3Cx, 3Dx, 3Ex, 3Fx, 3Gx, 3Hx, 3Jx, 3Kx, 3Lx, 3Mx, 3Nx, 3Px, 3Qx, 3Rx, 3Sx, 3Tx, 3Ux, 3Vx, 3Wx, 3Xx, 3Yx, 3Zx, 42x, 43x, 44x, 45x, 46x, 47x, 48x, 49x, 4Ax, 4Bx, 4Cx, 4Dx, 4Ex, 4Fx, 4Gx, 4Hx, 4Jx, 4Kx, 4Lx, 4Mx, 4Nx, 4Px, 4Rx, 4Sx, 4Tx, 4Ux, 4Vx, 4Wx, 4Xx, 4Yx, 4Zx, 52x, 53x, 54x, 55x, 56x, 57x, 59x, 5Ax, 5Bx, 5Cx, 5Dx, 5Ex, 5Fx, 5Gx, 5Hx, 5Jx, 5Kx, 5Lx, 5Mx, 5Nx, 5Px, 5Qx, 5Rx, 5Sx, 5Tx, 5Ux, 5Vx, 5Wx, 5Xx, 5Yx, 5Zx, 62x, 63x, 64x, 65x, 66x, 67x, 68x, 69x, 6Ax, 6Bx, 6Cx, 6Dx, 6Ex, 6Fx, 6Gx, 6Hx, 6Jx, 6Kx, 6Lx, 6Mx, 6Nx, 6Px, 6Qx, 6Rx, 6Sx, 6Tx, 6Ux, 6Vx, 6Wx, 6Xx, 6Yx, 6Zx, 72x, 73x, 74x, 75x, 76x, 77x • 4404-CTO, 32x, 33x, 34x, 35x, 36x, 37x, 38x, 39x, 3Ax, 3Bx, 3Cx, 3Dx, 3Ex, 3Fx, 3Mx, 3Nx, 3Px, 3Qx, 3Rx, 3Sx, 3Tx, 3Ux, 3Vx, 3Wx, 3Xx, 3Yx, 3Zx, 42x, 43x, 44x, 45x, 46x, 47x, 48x, 49x, 4Ax, 4Bx, 4Cx, 4Dx, 4Ex, 4Fx, 4Gx, 4Hx, 4Jx, 4Kx, 4Lx, 4Mx, 4Nx, 4Px, 4Qx, 4Rx, 4Sx, 4Tx, 4Ux, 4Vx, 4Wx, 4Xx, 4Yx, 4Zx • 2550-CTO, 42x, 43x, 44x, 52x, 53x, 54x, 55x, 57x, 58x, 59x, 5Ax, 5Bx, 5Dx, 5Fx, 5Hx, 5Kx, 5Mx, 5Px, 5Rx, 5Tx, 5Vx, 5Xx, 5Yx, 5Zx, 62x, 63x, 64x, 65x, 66x, 67x, 68x, 69x, 6Ax, 6Nx • 2597-CTO, 22x, 32x, 52x, 53x, 54x, 55x, 56x, 58x, 59x, 5Ax, 5Bx, 5Cx, 5Dx, 5Ex, 5Fx, 5Rx, 5Sx, 5Tx, 5Vx, 5Wx, 5Xx, 5Yx, 5Zx, 62x, 63x, 64x, 65x, 66x, 67x, 68x, 69x, 6Ax, 6Bx, 6Cx, 6Dx, 6Ex, 6Fx, 6Gx, 6Hx, 6Jx, 6Kx, 6Lx, 6Mx, 6Nx, 6Px, 6Qx • 2598-CTO, 22x, 33x, 34x, 35x, 42x, 43x, 44x, 52x, 53x, 54x, 55x, 56x, 57x, 58x, 59x, 5Ax, 5Bx, 5Cx, 5Dx, 5Ex, 5Fx, 5Gx, 5Hx, 5Jx, 5Kx, 5Lx, 5Mx, 5Nx, 5Px, 5Qx, 5Rx, 5Sx, 5Tx, 5Vx, 5Wx, 5Xx, 5Yx, 5Zx, 62x, 63x, 64x, 65x, 66x, 6Gx, 6Jx, 6Kx, 6Lx, 6Nx, 6Px, 6Qx, 6Rx, 6Xx, 6Yx, 6Zx, 72x, 73x, 74x, 75x, 76x, 77x, 78x, 79x, 7Ax, 7Bx, 7Cx, 7Dx, 7Ex, 7Fx, 7Gx, 7Hx, 7Jx, 7Kx, 7Qx, 7Rx, 7Sx, 7Tx, 7Ux, 7Vx, 7Wx, 7Xx, 7Yx, 7Zx, 82x, 83x, 84x, 85x, R2x, R3x • 2599-CTO, 52x, 53x • 4444-CTO, 32x, 33x, 34x, 35x, 36x, 37x, 38x, 39x, 3Ax, 3Bx, 3Cx, 3Dx, 3Ex, 3Fx, 3Gx, 3Hx, 3Jx, 3Kx, 3Lx, 3Px, 3Rx, 3Sx, 3Tx, 3Ux, 3Vx, 3Wx, 3Yx, 3Zx, 42x, 43x, 44x, 45x, 46x, 47x, 48x, 49x, 4Ax, 4Bx, 4Cx, 4Dx, 4Ex, 4Fx, 4Gx, 4Hx, 4Jx, 4Kx, 4Lx, 4Mx, 4Nx, 4Px, 4Qx, 4Rx, 4Sx, 4Tx, 4Ux, 4Vx, 4Wx, 4Xx, 4Yx, 4Zx, 52x, 57x, 58x, 59x, 5Ax, 5Bx, 5Cx, 5Dx, 5Ex • 4447-CTO, 32x, 33x, 34x, 35x, 36x, 37x, 38x, 39x, 3Ax, 3Bx, 3Cx, 3Dx, 3Ex, 3Hx, 7Lx, 7Mx, 7Nx, 7Px	42T4795	*

Table 40. Parts list—Overall (continued)

No.	FRU (Overall)	FRU no.	CRU ID
10	Battery pack, 6 cell Li-ion (2.6 Ah) dual-mode • 0530-CTO, 22x, 32x, 52x, 53x, 54x, 55x, 56x, 57x, 59x, 5Ax, 5Bx, 5Cx, 5Dx, 5Ex, 5Fx, 5Gx, 5Kx, 5Wx, 5Xx, 5Zx, 62x, 63x, 64x, 65x, 66x, 67x, 68x, 69x, 6Ax, 6Bx, 6Cx, 6Dx, 6Ex, 6Fx, 6Gx, 6Hx, 6Jx, 6Kx, 6Lx, 6Mx, 6Nx • 0553-CTO, 22x, 33x, 35x, 36x, 42x, 43x, 44x, 52x, 53x, 55x, 56x, 57x, 58x, 59x, 5Ax, 5Bx, 5Cx, 5Dx, 5Fx, 5Gx, 5Hx, 5Jx, 5Kx, 5Lx, 5Mx, 5Nx, 5Px, 5Qx, 5Rx, 5Tx, 5Ux, 5Vx, 5Wx, 5Xx, 5Yx, 6Cx, 6Dx, 6Fx, 6Gx, 6Hx, 6Jx, 6Kx, 6Lx, 6Mx, 6Nx, 6Px, 6Qx, 6Rx, 6Sx, 6Tx, 6Ux, 6Vx, 6Wx, 74x, 76x, 77x, 78x, 79x, 7Ax, 7Bx, 7Cx, 7Dx, 7Ex, 7Fx, 7Gx, 7Hx, 7Jx, 7Kx, 7Lx, 7Mx, 7Nx, 7Px, 7Qx, 7Rx, 7Sx, 7Tx, 7Ux, 7Vx, 7Wx, 7Xx, 7Yx, 7Zx, 82x, 83x, 84x, 85x, 86x, 87x, 88x, 89x, 8Ax, 8Bx, 8Cx, 8Dx, R2x, R3x • 0585-CTO, 42x, 43x, 44x, 52x, 53x, 54x, 55x, 56x, 57x, 58x, 59x, 5Ax, 5Bx, 5Dx, 5Fx, 5Hx, 5Kx, 5Mx, 5Px, 5Rx, 5Tx, 5Vx, 5Yx, 64x, 65x, 66x, 67x, 68x, 69x, 6Ax, 6Bx, 6Cx, 6Dx, 6Ex, 6Fx, 6Gx, 6Hx, 6Jx, 6Kx, 6Lx, 6Mx, 6Nx, 6Px, 6Qx, 6Rx, 6Sx, 6Tx, 6Ux, 74x, 76x, 77x • 0591-CTO, 52x, 53x • 4403-CTO, 32x, 33x, 34x, 35x, 36x, 37x, 38x, 39x, 3Ax, 3Bx, 3Cx, 3Dx, 3Ex, 3Fx, 3Gx, 3Hx, 3Jx, 3Kx, 3Lx, 3Mx, 3Nx, 3Px, 3Qx, 3Rx, 3Sx, 3Tx, 3Ux, 3Vx, 3Wx, 3Xx, 3Yx, 3Zx, 42x, 43x, 44x, 45x, 46x, 47x, 48x, 49x, 4Ax, 4Bx, 4Cx, 4Dx, 4Ex, 4Fx, 4Gx, 4Hx, 4Jx, 4Kx, 4Lx, 4Mx, 4Nx, 4Px, 4Rx, 4Sx, 4Tx, 4Ux, 4Vx, 4Wx, 4Xx, 4Yx, 4Zx, 52x, 53x, 54x, 55x, 56x, 57x, 59x, 5Ax, 5Bx, 5Cx, 5Dx, 5Ex, 5Fx, 5Gx, 5Hx, 5Jx, 5Kx, 5Lx, 5Mx, 5Nx, 5Px, 5Qx, 5Rx, 5Sx, 5Tx, 5Ux, 5Vx, 5Wx, 5Xx, 5Yx, 5Zx, 62x, 63x, 64x, 65x, 66x, 67x, 68x, 69x, 6Ax, 6Bx, 6Cx, 6Dx, 6Ex, 6Fx, 6Gx, 6Hx, 6Jx, 6Kx, 6Lx, 6Mx, 6Nx, 6Px, 6Qx, 6Rx, 6Sx, 6Tx, 6Ux, 6Vx, 6Wx, 6Xx, 6Yx, 6Zx, 72x, 73x, 74x, 75x, 76x, 77x • 4404-CTO, 32x, 33x, 34x, 35x, 36x, 37x, 38x, 39x, 3Ax, 3Bx, 3Cx, 3Dx, 3Ex, 3Fx, 3Mx, 3Nx, 3Px, 3Qx, 3Rx, 3Sx, 3Tx, 3Ux, 3Vx, 3Wx, 3Xx, 3Yx, 3Zx, 42x, 43x, 44x, 45x, 46x, 47x, 48x, 49x, 4Ax, 4Bx, 4Cx, 4Dx, 4Ex, 4Fx, 4Gx, 4Hx, 4Jx, 4Kx, 4Lx, 4Mx, 4Nx, 4Px, 4Qx, 4Rx, 4Sx, 4Tx, 4Ux, 4Vx, 4Wx, 4Xx, 4Yx, 4Zx • 2550-CTO, 42x, 43x, 44x, 52x, 53x, 54x, 55x, 57x, 58x, 59x, 5Ax, 5Bx, 5Dx, 5Fx, 5Hx, 5Kx, 5Mx, 5Px, 5Rx, 5Tx, 5Vx, 5Xx, 5Yx, 5Zx, 62x, 63x, 64x, 65x, 66x, 67x, 68x, 69x, 6Ax, 6Nx • 2597-CTO, 22x, 32x, 52x, 53x, 54x, 55x, 56x, 58x, 59x, 5Ax, 5Bx, 5Cx, 5Dx, 5Ex, 5Fx, 5Rx, 5Sx, 5Tx, 5Vx, 5Wx, 5Xx, 5Yx, 5Zx, 62x, 63x, 64x, 65x, 66x, 67x, 68x, 69x, 6Ax, 6Bx, 6Cx, 6Dx, 6Ex, 6Fx, 6Gx, 6Hx, 6Jx, 6Kx, 6Lx, 6Mx, 6Nx, 6Px, 6Qx • 2598-CTO, 22x, 33x, 34x, 35x, 42x, 43x, 44x, 52x, 53x, 54x, 55x, 56x, 57x, 58x, 59x, 5Ax, 5Bx, 5Cx, 5Dx, 5Ex, 5Fx, 5Gx, 5Hx, 5Jx, 5Kx, 5Lx, 5Mx, 5Nx, 5Px, 5Qx, 5Rx, 5Sx, 5Tx, 5Vx, 5Wx, 5Xx, 5Yx, 5Zx, 62x, 63x, 64x, 65x, 66x, 6Gx, 6Jx, 6Kx, 6Lx, 6Nx, 6Px, 6Qx, 6Rx, 6Xx, 6Yx, 6Zx, 72x, 73x, 74x, 75x, 76x, 77x, 78x, 79x, 7Ax, 7Bx, 7Cx, 7Dx, 7Ex, 7Fx, 7Gx, 7Hx, 7Jx, 7Kx, 7Qx, 7Rx, 7Sx, 7Tx, 7Ux, 7Vx, 7Wx, 7Xx, 7Yx, 7Zx, 82x, 83x, 84x, 85x, R2x, R3x • 2599-CTO, 52x, 53x • 4444-CTO, 32x, 33x, 34x, 35x, 36x, 37x, 38x, 39x, 3Ax, 3Bx, 3Cx, 3Dx, 3Ex, 3Fx, 3Gx, 3Hx, 3Jx, 3Kx, 3Lx, 3Px, 3Rx, 3Sx, 3Tx, 3Ux, 3Vx, 3Wx, 3Yx, 3Zx, 42x, 43x, 44x, 45x, 46x, 47x, 48x, 49x, 4Ax, 4Bx, 4Cx, 4Dx, 4Ex, 4Fx, 4Gx, 4Hx, 4Jx, 4Kx, 4Lx, 4Mx, 4Nx, 4Px, 4Qx, 4Rx, 4Sx, 4Tx, 4Ux, 4Vx, 4Wx, 4Xx, 4Yx, 4Zx, 52x, 57x, 58x, 59x, 5Ax, 5Bx, 5Cx, 5Dx, 5Ex • 4447-CTO, 32x, 33x, 34x, 35x, 36x, 37x, 38x, 39x, 3Ax, 3Bx, 3Cx, 3Dx, 3Ex, 3Hx, 7Lx, 7Mx, 7Nx, 7Px	42T4911	*

Table 40. Parts list—Overall (continued)

No.	FRU (Overall)	FRU no.	CRU ID
10	Battery pack, 6 cell Li-ion (2.6 Ah) dual-mode • 0530-CTO, 22x, 32x, 52x, 53x, 54x, 55x, 56x, 57x, 59x, 5Ax, 5Bx, 5Cx, 5Dx, 5Ex, 5Fx, 5Gx, 5Kx, 5Wx, 5Xx, 5Zx, 62x, 63x, 64x, 65x, 66x, 67x, 68x, 69x, 6Ax, 6Bx, 6Cx, 6Dx, 6Ex, 6Fx, 6Gx, 6Hx, 6Jx, 6Kx, 6Lx, 6Mx, 6Nx • 0553-CTO, 22x, 33x, 35x, 36x, 42x, 43x, 44x, 52x, 53x, 55x, 56x, 57x, 58x, 59x, 5Ax, 5Bx, 5Cx, 5Dx, 5Fx, 5Gx, 5Hx, 5Jx, 5Kx, 5Lx, 5Mx, 5Nx, 5Px, 5Qx, 5Rx, 5Tx, 5Ux, 5Vx, 5Wx, 5Xx, 5Yx, 6Cx, 6Dx, 6Fx, 6Gx, 6Hx, 6Jx, 6Kx, 6Lx, 6Mx, 6Nx, 6Px, 6Qx, 6Rx, 6Sx, 6Tx, 6Ux, 6Vx, 6Wx, 74x, 76x, 77x, 78x, 79x, 7Ax, 7Bx, 7Cx, 7Dx, 7Ex, 7Fx, 7Gx, 7Hx, 7Jx, 7Kx, 7Lx, 7Mx, 7Nx, 7Px, 7Qx, 7Rx, 7Sx, 7Tx, 7Ux, 7Vx, 7Wx, 7Xx, 7Yx, 7Zx, 82x, 83x, 84x, 85x, 86x, 87x, 88x, 89x, 8Ax, 8Bx, 8Cx, 8Dx, R2x, R3x • 0585-CTO, 42x, 43x, 44x, 52x, 53x, 54x, 55x, 56x, 57x, 58x, 59x, 5Ax, 5Bx, 5Dx, 5Fx, 5Hx, 5Kx, 5Mx, 5Px, 5Rx, 5Tx, 5Vx, 5Yx, 64x, 65x, 66x, 67x, 68x, 69x, 6Ax, 6Bx, 6Cx, 6Dx, 6Ex, 6Fx, 6Gx, 6Hx, 6Jx, 6Kx, 6Lx, 6Mx, 6Nx, 6Px, 6Qx, 6Rx, 6Sx, 6Tx, 6Ux, 74x, 76x, 77x • 0591-CTO, 52x, 53x • 4403-CTO, 32x, 33x, 34x, 35x, 36x, 37x, 38x, 39x, 3Ax, 3Bx, 3Cx, 3Dx, 3Ex, 3Fx, 3Gx, 3Hx, 3Jx, 3Kx, 3Lx, 3Mx, 3Nx, 3Px, 3Qx, 3Rx, 3Sx, 3Tx, 3Ux, 3Vx, 3Wx, 3Xx, 3Yx, 3Zx, 42x, 43x, 44x, 45x, 46x, 47x, 48x, 49x, 4Ax, 4Bx, 4Cx, 4Dx, 4Ex, 4Fx, 4Gx, 4Hx, 4Jx, 4Kx, 4Lx, 4Mx, 4Nx, 4Px, 4Rx, 4Sx, 4Tx, 4Ux, 4Vx, 4Wx, 4Xx, 4Yx, 4Zx, 52x, 53x, 54x, 55x, 56x, 57x, 59x, 5Ax, 5Bx, 5Cx, 5Dx, 5Ex, 5Fx, 5Gx, 5Hx, 5Jx, 5Kx, 5Lx, 5Mx, 5Nx, 5Px, 5Qx, 5Rx, 5Sx, 5Tx, 5Ux, 5Vx, 5Wx, 5Xx, 5Yx, 5Zx, 62x, 63x, 64x, 65x, 66x, 67x, 68x, 69x, 6Ax, 6Bx, 6Cx, 6Dx, 6Ex, 6Fx, 6Gx, 6Hx, 6Jx, 6Kx, 6Lx, 6Mx, 6Nx, 6Px, 6Qx, 6Rx, 6Sx, 6Tx, 6Ux, 6Vx, 6Wx, 6Xx, 6Yx, 6Zx, 72x, 73x, 74x, 75x, 76x, 77x • 4404-CTO, 32x, 33x, 34x, 35x, 36x, 37x, 38x, 39x, 3Ax, 3Bx, 3Cx, 3Dx, 3Ex, 3Fx, 3Mx, 3Nx, 3Px, 3Qx, 3Rx, 3Sx, 3Tx, 3Ux, 3Vx, 3Wx, 3Xx, 3Yx, 3Zx, 42x, 43x, 44x, 45x, 46x, 47x, 48x, 49x, 4Ax, 4Bx, 4Cx, 4Dx, 4Ex, 4Fx, 4Gx, 4Hx, 4Jx, 4Kx, 4Lx, 4Mx, 4Nx, 4Px, 4Qx, 4Rx, 4Sx, 4Tx, 4Ux, 4Vx, 4Wx, 4Xx, 4Yx, 4Zx • 2550-CTO, 42x, 43x, 44x, 52x, 53x, 54x, 55x, 57x, 58x, 59x, 5Ax, 5Bx, 5Dx, 5Fx, 5Hx, 5Kx, 5Mx, 5Px, 5Rx, 5Tx, 5Vx, 5Xx, 5Yx, 5Zx, 62x, 63x, 64x, 65x, 66x, 67x, 68x, 69x, 6Ax, 6Nx • 2597-CTO, 22x, 32x, 52x, 53x, 54x, 55x, 56x, 58x, 59x, 5Ax, 5Bx, 5Cx, 5Dx, 5Ex, 5Fx, 5Rx, 5Sx, 5Tx, 5Vx, 5Wx, 5Xx, 5Yx, 5Zx, 62x, 63x, 64x, 65x, 66x, 67x, 68x, 69x, 6Ax, 6Bx, 6Cx, 6Dx, 6Ex, 6Fx, 6Gx, 6Hx, 6Jx, 6Kx, 6Lx, 6Mx, 6Nx, 6Px, 6Qx • 2598-CTO, 22x, 33x, 34x, 35x, 42x, 43x, 44x, 52x, 53x, 54x, 55x, 56x, 57x, 58x, 59x, 5Ax, 5Bx, 5Cx, 5Dx, 5Ex, 5Fx, 5Gx, 5Hx, 5Jx, 5Kx, 5Lx, 5Mx, 5Nx, 5Px, 5Qx, 5Rx, 5Sx, 5Tx, 5Vx, 5Wx, 5Xx, 5Yx, 5Zx, 62x, 63x, 64x, 65x, 66x, 6Gx, 6Jx, 6Kx, 6Lx, 6Nx, 6Px, 6Qx, 6Rx, 6Xx, 6Yx, 6Zx, 72x, 73x, 74x, 75x, 76x, 77x, 78x, 79x, 7Ax, 7Bx, 7Cx, 7Dx, 7Ex, 7Fx, 7Gx, 7Hx, 7Jx, 7Kx, 7Qx, 7Rx, 7Sx, 7Tx, 7Ux, 7Vx, 7Wx, 7Xx, 7Yx, 7Zx, 82x, 83x, 84x, 85x, R2x, R3x • 2599-CTO, 52x, 53x • 4444-CTO, 32x, 33x, 34x, 35x, 36x, 37x, 38x, 39x, 3Ax, 3Bx, 3Cx, 3Dx, 3Ex, 3Fx, 3Gx, 3Hx, 3Jx, 3Kx, 3Lx, 3Px, 3Rx, 3Sx, 3Tx, 3Ux, 3Vx, 3Wx, 3Yx, 3Zx, 42x, 43x, 44x, 45x, 46x, 47x, 48x, 49x, 4Ax, 4Bx, 4Cx, 4Dx, 4Ex, 4Fx, 4Gx, 4Hx, 4Jx, 4Kx, 4Lx, 4Mx, 4Nx, 4Px, 4Qx, 4Rx, 4Sx, 4Tx, 4Ux, 4Vx, 4Wx, 4Xx, 4Yx, 4Zx, 52x, 57x, 58x, 59x, 5Ax, 5Bx, 5Cx, 5Dx, 5Ex • 4447-CTO, 32x, 33x, 34x, 35x, 36x, 37x, 38x, 39x, 3Ax, 3Bx, 3Cx, 3Dx, 3Ex, 3Hx, 7Lx, 7Mx, 7Nx, 7Px	42T4852	*

Table 40. Parts list—Overall (continued)

No.	FRU (Overall)	FRU no.	CRU ID
10	Battery pack, 6 cell Li-ion (2.6 Ah) dual-mode • 0530-CTO, 22x, 32x, 52x, 53x, 54x, 55x, 56x, 57x, 59x, 5Ax, 5Bx, 5Cx, 5Dx, 5Ex, 5Fx, 5Gx, 5Kx, 5Wx, 5Xx, 5Zx, 62x, 63x, 64x, 65x, 66x, 67x, 68x, 69x, 6Ax, 6Bx, 6Cx, 6Dx, 6Ex, 6Fx, 6Gx, 6Hx, 6Jx, 6Kx, 6Lx, 6Mx, 6Nx • 0553-CTO, 22x, 33x, 35x, 36x, 42x, 43x, 44x, 52x, 53x, 55x, 56x, 57x, 58x, 59x, 5Ax, 5Bx, 5Cx, 5Dx, 5Fx, 5Gx, 5Hx, 5Jx, 5Kx, 5Lx, 5Mx, 5Nx, 5Px, 5Qx, 5Rx, 5Tx, 5Ux, 5Vx, 5Wx, 5Xx, 5Yx, 6Cx, 6Dx, 6Fx, 6Gx, 6Hx, 6Jx, 6Kx, 6Lx, 6Mx, 6Nx, 6Px, 6Qx, 6Rx, 6Sx, 6Tx, 6Ux, 6Vx, 6Wx, 74x, 76x, 77x, 78x, 79x, 7Ax, 7Bx, 7Cx, 7Dx, 7Ex, 7Fx, 7Gx, 7Hx, 7Jx, 7Kx, 7Lx, 7Mx, 7Nx, 7Px, 7Qx, 7Rx, 7Sx, 7Tx, 7Ux, 7Vx, 7Wx, 7Xx, 7Yx, 7Zx, 82x, 83x, 84x, 85x, 86x, 87x, 88x, 89x, 8Ax, 8Bx, 8Cx, 8Dx, R2x, R3x • 0585-CTO, 42x, 43x, 44x, 52x, 53x, 54x, 55x, 56x, 57x, 58x, 59x, 5Ax, 5Bx, 5Dx, 5Fx, 5Hx, 5Kx, 5Mx, 5Px, 5Rx, 5Tx, 5Vx, 5Yx, 64x, 65x, 66x, 67x, 68x, 69x, 6Ax, 6Bx, 6Cx, 6Dx, 6Ex, 6Fx, 6Gx, 6Hx, 6Jx, 6Kx, 6Lx, 6Mx, 6Nx, 6Px, 6Qx, 6Rx, 6Sx, 6Tx, 6Ux, 74x, 76x, 77x • 0591-CTO, 52x, 53x • 4403-CTO, 32x, 33x, 34x, 35x, 36x, 37x, 38x, 39x, 3Ax, 3Bx, 3Cx, 3Dx, 3Ex, 3Fx, 3Gx, 3Hx, 3Jx, 3Kx, 3Lx, 3Mx, 3Nx, 3Px, 3Qx, 3Rx, 3Sx, 3Tx, 3Ux, 3Vx, 3Wx, 3Xx, 3Yx, 3Zx, 42x, 43x, 44x, 45x, 46x, 47x, 48x, 49x, 4Ax, 4Bx, 4Cx, 4Dx, 4Ex, 4Fx, 4Gx, 4Hx, 4Jx, 4Kx, 4Lx, 4Mx, 4Nx, 4Px, 4Rx, 4Sx, 4Tx, 4Ux, 4Vx, 4Wx, 4Xx, 4Yx, 4Zx, 52x, 53x, 54x, 55x, 56x, 57x, 59x, 5Ax, 5Bx, 5Cx, 5Dx, 5Ex, 5Fx, 5Gx, 5Hx, 5Jx, 5Kx, 5Lx, 5Mx, 5Nx, 5Px, 5Qx, 5Rx, 5Sx, 5Tx, 5Ux, 5Vx, 5Wx, 5Xx, 5Yx, 5Zx, 62x, 63x, 64x, 65x, 66x, 67x, 68x, 69x, 6Ax, 6Bx, 6Cx, 6Dx, 6Ex, 6Fx, 6Gx, 6Hx, 6Jx, 6Kx, 6Lx, 6Mx, 6Nx, 6Px, 6Qx, 6Rx, 6Sx, 6Tx, 6Ux, 6Vx, 6Wx, 6Xx, 6Yx, 6Zx, 72x, 73x, 74x, 75x, 76x, 77x • 4404-CTO, 32x, 33x, 34x, 35x, 36x, 37x, 38x, 39x, 3Ax, 3Bx, 3Cx, 3Dx, 3Ex, 3Fx, 3Mx, 3Nx, 3Px, 3Qx, 3Rx, 3Sx, 3Tx, 3Ux, 3Vx, 3Wx, 3Xx, 3Yx, 3Zx, 42x, 43x, 44x, 45x, 46x, 47x, 48x, 49x, 4Ax, 4Bx, 4Cx, 4Dx, 4Ex, 4Fx, 4Gx, 4Hx, 4Jx, 4Kx, 4Lx, 4Mx, 4Nx, 4Px, 4Qx, 4Rx, 4Sx, 4Tx, 4Ux, 4Vx, 4Wx, 4Xx, 4Yx, 4Zx • 2550-CTO, 42x, 43x, 44x, 52x, 53x, 54x, 55x, 57x, 58x, 59x, 5Ax, 5Bx, 5Dx, 5Fx, 5Hx, 5Kx, 5Mx, 5Px, 5Rx, 5Tx, 5Vx, 5Xx, 5Yx, 5Zx, 62x, 63x, 64x, 65x, 66x, 67x, 68x, 69x, 6Ax, 6Nx • 2597-CTO, 22x, 32x, 52x, 53x, 54x, 55x, 56x, 58x, 59x, 5Ax, 5Bx, 5Cx, 5Dx, 5Ex, 5Fx, 5Rx, 5Sx, 5Tx, 5Vx, 5Wx, 5Xx, 5Yx, 5Zx, 62x, 63x, 64x, 65x, 66x, 67x, 68x, 69x, 6Ax, 6Bx, 6Cx, 6Dx, 6Ex, 6Fx, 6Gx, 6Hx, 6Jx, 6Kx, 6Lx, 6Mx, 6Nx, 6Px, 6Qx • 2598-CTO, 22x, 33x, 34x, 35x, 42x, 43x, 44x, 52x, 53x, 54x, 55x, 56x, 57x, 58x, 59x, 5Ax, 5Bx, 5Cx, 5Dx, 5Ex, 5Fx, 5Gx, 5Hx, 5Jx, 5Kx, 5Lx, 5Mx, 5Nx, 5Px, 5Qx, 5Rx, 5Sx, 5Tx, 5Vx, 5Wx, 5Xx, 5Yx, 5Zx, 62x, 63x, 64x, 65x, 66x, 6Gx, 6Jx, 6Kx, 6Lx, 6Nx, 6Px, 6Qx, 6Rx, 6Xx, 6Yx, 6Zx, 72x, 73x, 74x, 75x, 76x, 77x, 78x, 79x, 7Ax, 7Bx, 7Cx, 7Dx, 7Ex, 7Fx, 7Gx, 7Hx, 7Jx, 7Kx, 7Qx, 7Rx, 7Sx, 7Tx, 7Ux, 7Vx, 7Wx, 7Xx, 7Yx, 7Zx, 82x, 83x, 84x, 85x, R2x, R3x • 2599-CTO, 52x, 53x • 4444-CTO, 32x, 33x, 34x, 35x, 36x, 37x, 38x, 39x, 3Ax, 3Bx, 3Cx, 3Dx, 3Ex, 3Fx, 3Gx, 3Hx, 3Jx, 3Kx, 3Lx, 3Px, 3Rx, 3Sx, 3Tx, 3Ux, 3Vx, 3Wx, 3Yx, 3Zx, 42x, 43x, 44x, 45x, 46x, 47x, 48x, 49x, 4Ax, 4Bx, 4Cx, 4Dx, 4Ex, 4Fx, 4Gx, 4Hx, 4Jx, 4Kx, 4Lx, 4Mx, 4Nx, 4Px, 4Qx, 4Rx, 4Sx, 4Tx, 4Ux, 4Vx, 4Wx, 4Xx, 4Yx, 4Zx, 52x, 57x, 58x, 59x, 5Ax, 5Bx, 5Cx, 5Dx, 5Ex • 4447-CTO, 32x, 33x, 34x, 35x, 36x, 37x, 38x, 39x, 3Ax, 3Bx, 3Cx, 3Dx, 3Ex, 3Hx, 7Lx, 7Mx, 7Nx, 7Px	42T4797	*

Table 40. Parts list—Overall (continued)

No.	FRU (Overall)	FRU no.	CRU ID
10	Battery pack, 6 cell Li-ion (2.9 Ah) • 0530-CTO • 0553-CTO • 0585-CTO • 0591-CTO • 4403-CTO • 4404-CTO • 2550-CTO • 2597-CTO • 2598-CTO • 2599-CTO • 4444-CTO • 4447-CTO	42T4817	*
10	Battery pack, 6 cell Li-ion (2.9 Ah) • 0530-CTO • 0553-CTO • 0585-CTO • 0591-CTO • 4403-CTO • 4404-CTO • 2550-CTO • 2597-CTO • 2598-CTO • 2599-CTO • 4444-CTO • 4447-CTO	42T4819	*
10	Battery pack, 9 cell Li-ion (2.8 Ah) • 2842-CTO • 2847-CTO, 23x, A7x • 2873-CTO • 2874-CTO • 2875-CTO • 2931-CTO, 22x	42T4710	*
10	Battery pack, 9 cell Li-ion (2.8 Ah) • 2842-CTO • 2847-CTO, 23x, A7x • 2873-CTO • 2874-CTO • 2875-CTO • 2931-CTO, 22x	42T4712	*
10	Battery pack, 9 cell Li-ion (2.8 Ah) • 2842-CTO • 2847-CTO, 23x, A7x • 2873-CTO • 2874-CTO • 2875-CTO • 2931-CTO, 22x	42T4851	*
10	Battery pack, 9 cell Li-ion (2.8 Ah) • 2842-CTO • 2847-CTO, 23x, A7x • 2873-CTO • 2874-CTO • 2875-CTO • 2931-CTO, 22x	42T4714	*

Table 40. Parts list—Overall (continued)

No.	FRU (Overall)	FRU no.	CRU ID
10	Battery pack, 9 cell Li-ion (2.8 Ah) dual-mode • 0530-CTO, 5Jx • 0553-CTO, 24x, 25x, 54x, 5Ex, 6Bx, 6Xx, 6Yx, 6Zx, 72x, 73x, 75x • 0585-CTO, 6Xx, 6Yx, 6Zx, 75x • 0591-CTO • 4403-CTO, 58x • 4404-CTO, 3Gx, 3Hx, 3Jx, 3Kx, 3Lx • 2550-CTO, 6Sx, 6Tx, 6Ux • 2597-CTO • 2598-CTO, 24x, 25x, 6Sx, 6Tx, 6Ux, 6Vx, 6Wx • 2599-CTO • 4444-CTO, 3Mx, 3Nx, 3Qx • 4447-CTO, 3Fx, 3Gx	42T4799	*
10	Battery pack, 9 cell Li-ion (2.8 Ah) dual-mode • 0530-CTO, 5Jx • 0553-CTO, 24x, 25x, 54x, 5Ex, 6Bx, 6Xx, 6Yx, 6Zx, 72x, 73x, 75x • 0585-CTO, 6Xx, 6Yx, 6Zx, 75x • 0591-CTO • 4403-CTO, 58x • 4404-CTO, 3Gx, 3Hx, 3Jx, 3Kx, 3Lx • 2550-CTO, 6Sx, 6Tx, 6Ux • 2597-CTO • 2598-CTO, 24x, 25x, 6Sx, 6Tx, 6Ux, 6Vx, 6Wx • 2599-CTO • 4444-CTO, 3Mx, 3Nx, 3Qx • 4447-CTO, 3Fx, 3Gx	42T4801	*
10	Battery pack, 9 cell Li-ion (2.8 Ah) dual-mode • 0530-CTO, 5Jx • 0553-CTO, 24x, 25x, 54x, 5Ex, 6Bx, 6Xx, 6Yx, 6Zx, 72x, 73x, 75x • 0585-CTO, 6Xx, 6Yx, 6Zx, 75x • 0591-CTO • 4403-CTO, 58x • 4404-CTO, 3Gx, 3Hx, 3Jx, 3Kx, 3Lx • 2550-CTO, 6Sx, 6Tx, 6Ux • 2597-CTO • 2598-CTO, 24x, 25x, 6Sx, 6Tx, 6Ux, 6Vx, 6Wx • 2599-CTO • 4444-CTO, 3Mx, 3Nx, 3Qx • 4447-CTO, 3Fx, 3Gx	42T4912	*
10	Battery pack, 9 cell Li-ion (2.8 Ah) dual-mode • 0530-CTO, 5Jx • 0553-CTO, 24x, 25x, 54x, 5Ex, 6Bx, 6Xx, 6Yx, 6Zx, 72x, 73x, 75x • 0585-CTO, 6Xx, 6Yx, 6Zx, 75x • 0591-CTO • 4403-CTO, 58x • 4404-CTO, 3Gx, 3Hx, 3Jx, 3Kx, 3Lx • 2550-CTO, 6Sx, 6Tx, 6Ux • 2597-CTO • 2598-CTO, 24x, 25x, 6Sx, 6Tx, 6Ux, 6Vx, 6Wx • 2599-CTO • 4444-CTO, 3Mx, 3Nx, 3Qx • 4447-CTO, 3Fx, 3Gx	42T4853	*

Table 40. Parts list—Overall (continued)

No.	FRU (Overall)	FRU no.	CRU ID
10	Battery pack, 9 cell Li-ion (2.8 Ah) dual-mode • 0530-CTO, 5Jx • 0553-CTO, 24x, 25x, 54x, 5Ex, 6Bx, 6Xx, 6Yx, 6Zx, 72x, 73x, 75x • 0585-CTO, 6Xx, 6Yx, 6Zx, 75x • 0591-CTO • 4403-CTO, 58x • 4404-CTO, 3Gx, 3Hx, 3Jx, 3Kx, 3Lx • 2550-CTO, 6Sx, 6Tx, 6Ux • 2597-CTO • 2598-CTO, 24x, 25x, 6Sx, 6Tx, 6Ux, 6Vx, 6Wx • 2599-CTO • 4444-CTO, 3Mx, 3Nx, 3Qx • 4447-CTO, 3Fx, 3Gx	42T4803	*
11	Base cover assembly for 0616	04W0405	N
11	Base cover assembly for 2842	60Y4353	N
11	Base cover assembly for 2847	60Y4356	N
11	Base cover assembly for 2873	60Y4358	N
11	Base cover assembly for 2874	60Y4354	N
11	Base cover assembly for 2875	60Y4357	N
11	Base cover assembly for 2931	60Y4355	N
11	Base cover assembly for 5072	04W0406	N
11	Base cover assembly for SL410 and L410 for China SKU	04W1391	N
11	Base cover assembly for L412	60Y5024	N
11	Base cover assembly for SL510 and L510 for China SKU	04W1392	N
11	Base cover assembly for L512	75Y4789	N
12	DVD-ROM drive • 0530-CTO, 5Vx • 0553-CTO, 52x • 0585-CTO • 0591-CTO • 4403-CTO, 3Ax, 3Ex, 3Jx, 3Nx, 3Sx, 4Bx, 4Fx, 5Bx, 5Dx, 5Hx, 5Nx, 5Tx, 5Xx, 62x • 4404-CTO, 3Xx, 46x, 49x, 4Dx, 4Gx, 4Jx • 2550-CTO, 58x, 59x, 5Yx • 2597-CTO • 2598-CTO, 73x • 2599-CTO • 4444-CTO • 4447-CTO	63Y0911	**

Table 40. Parts list—Overall (continued)

No.	FRU (Overall)	FRU no.	CRU ID
12	DVD-RAM/RW drive • 0616-CTO, 22x, 25x, 26x, 27x, 28x, 29x, 2Cx, 2Dx • 2842-CTO, 22x, 23x, 24x, 25x, 26x, 27x, 28x, 29x, 2Ax, 2Bx, 2Cx, 2Dx, 2Ex, 33x, 34x, 35x, 36x, 37x, 39x, 3Bx, 3Dx, 3Fx, 3Gx, 3Hx, 3Px, 3Qx, 3Rx, 3Sx, 3Tx, 3Ux, 3Vx, 42x, 43x, 44x, 45x, 46x, 47x, 48x, 49x, 4Ax, 4Bx, 4Cx, 4Dx, 4Ex, 4Fx, 4Gx, 4Hx, 4Jx, 4Kx, 4Lx, 4Mx, 4Nx, 4Px, 4Qx, 4Rx, 4Sx, 4Tx, 4Ux, 4Vx, 4Wx, 4Xx, 4Yx, 4Zx, 52x, 53x, 54x, 55x, 56x, 57x, 58x, 59x, 5Ax, 5Bx, 5Cx, 5Dx, 5Ex, 5Fx, 5Gx, 5Hx, 5Jx, 5Kx, 5Lx, 5Mx, 5Nx, 5Px, 5Qx, 5Rx, 5Sx, 5Tx, 5Ux, 5Vx, 5Wx, 5Xx, 5Yx, 5Zx, 62x, 63x, 64x, 65x, 66x, 67x, 68x, 69x, 6Ax, 6Bx, 6Cx, 6Dx, 6Ex, 6Fx, 6Gx, 6Hx, 6Jx, 6Kx, 6Lx, 6Mx, 6Nx, 6Px, 6Qx, 6Rx, 6Sx, 6Tx, 6Ux, 6Vx, 6Wx, 6Xx, 6Yx, 6Zx, 72x, 73x, 74x, 75x, 76x, 77x, 78x, 7Bx, 7Cx, 7Dx, 7Ex, 7Fx, 7Gx, 7Hx, 7Jx, 7Px, 7Qx, 7Rx, 7Sx, 7Tx, 7Ux, 7Vx, 7Wx, 7Xx, 7Yx, 7Zx, 82x, 83x, 84x, 85x, 86x, 87x, 88x, 89x, 8Ax, 8Bx, 8Cx, 8Dx, 8Ex, 8Fx, 8Gx, 8Hx, 8Jx, 8Kx, 8Lx, 8Mx, 8Nx, 8Rx, 8Sx, 8Tx, 8Ux, 8Vx, 8Wx, 8Xx, 8Yx, 8Zx, 92x, 93x, 94x, 95x, 96x, 97x, 98x, 99x, 9Ax, 9Bx, 9Cx, 9Dx, 9Ex, 9Fx, 9Gx, 9Hx, 9Jx, 9Kx, 9Lx, 9Mx, 9Nx, 9Px, 9Qx, 9Rx, 9Sx, 9Tx, 9Ux, 9Vx, 9Wx, 9Xx, 9Yx, 9Zx, A2x, A3x, A4x, A5x, A6x, A7x, A8x, A9x, AAx, ABx, ACx, ADx, AEx, AFx, AGx, AHx, AJx, AKx, ALx, AMx, ANx, APx, AQx, ARx, ASx, ATx, AUx, AVx, AWx, AXx, AYx, AZx, B2x, B3x, B4x, B5x, B6x, B7x, B8x, B9x, BAx, BBx, BCx, BDx, BEx, BFx, BGx, BHx, BJx, BKx, BMx, BNx, BPx, BQx, BRx, BSx, BTx, BUx, BVx, BWx, BXx, BYx, BZx, C2x, C3x, C4x, C5x, C6x, C7x, C8x, C9x, CAx, CBx, CCx, CDx, CEx, CFx, CGx, CHx, CJx, CKx, CLx, CMx, CNx, CPx, CQx, CRx, CSx, CUx, CVx, CWx, CXx, CYx, CZx, D2x, D3x, D4x, D5x, D6x, D7x, D8x, D9x, DAx, DBx, DCx, DDx, DEx, DFx, DGx, DHx, DJx, DKx, DLx, DMx, DNx, DPx, DQx, DRx, DSx, DTx, DUx, DVx, DWx, DXx, DYx, DZx, E2x, E3x, E4x, E5x, E6x, E7x, E8x, E9x, EAx, EBx, ECx, EDx, EEx, EFx, EGx, EHx, EJx, EKx, ELx, EMx, ENx, EPx, EQx, ERx, ESx, ETx, EUx, EVx, EWx, EXx, EYx, EZx, F2x, F3x, F4x, F5x, F6x, F7x, F8x, F9x, FAx, FBx, FCx, FDx, FEx, FFx, FGx, FHx, FJx, FKx, FLx, FMx, FNx, FPx, FQx, FSx, FTx, FUx, FVx, FWx, FXx, FYx, FZx, G2x, G3x, G4x, G5x, G6x, G7x, G8x, G9x, GBx, GCx, GDx, GEx, GFx, GGx, GHx, GJx, GKx, GLx, GMx, GNx, GPx, GQx, GRx, GSx, GTx, GUx, GVx, GWx, GXx, GYx, GZx, H2x, H3x, H4x, H5x, H6x, H7x, H8x, H9x, HAx, HBx, HCx, HDx, HEx, HFx, HGx, HHx, HJx, HKx, HLx, HMx, HNx, HPx, HQx, HRx, HSx, HTx, HUx, HVx, HWx, HXx, HYx, HZx, J2x, J3x, J4x, J5x, J6x, J7x, J8x, J9x, JAx, JBx, JCx, JDx, JEx, JFx, JGx, JHx, JJx, JKx, JLx, JMx, JNx, JPx, JQx, JRx, JSx, JTx, JUx, JVx, JWx, JXx, JYx, JZx, K2x, K3x, K4x, K5x, K6x, K7x, K8x, K9x, KAx, KBx, KCx, KDx, KEx, KFx, KGx, KHx, KJx, KKx, KLx, KMx, KNx, KPx, KQx, KRx, KSx, KTx, KUx, KVx, KWx, KXx, KYx, KZx, L2x, L3x, L4x, L5x, L6x, L7x • 2874-CTO, 22x, 32x, 33x, 34x, 35x, 36x, 37x, 39x, 3Bx, 3Ex, 3Gx, 3Kx, 3Lx, 3Mx, 3Nx, 3Px, 3Qx, 3Rx, 3Sx, 46x, 47x, 48x, 49x, 4Ax, 4Bx, 4Cx, 4Dx, 4Fx, 4Gx, 4Hx, 4Jx, 4Kx, 4Lx, 4Mx, 4Nx, 4Px, 4Qx, 52x, 53x, 54x, 55x, 56x, 57x, 58x, 59x, 5Ax, 5Bx, 5Cx, 5Dx, 5Ex, 5Fx, 5Gx, 5Hx, 5Jx, 5Kx, 5Lx, 5Mx, 5Nx, 5Px, 5Qx, 5Rx, 62x, 63x, 64x, 65x, 66x, 67x, 68x, 69x, 6Ax, 6Bx, 6Cx, 6Dx, 6Ex, 6Fx, 6Gx, 6Hx, 6Jx, 6Kx, 6Lx, 6Mx, 6Nx, 6Px, 6Qx, 6Rx, 6Sx, 6Tx, 6Ux, 6Vx, 6Wx, 6Xx, 6Yx, 6Zx, 72x, 73x, 74x, 75x, 76x, 77x, 78x, 79x, 7Ax, 7Bx, 7Cx, 7Dx, 7Ex, 7Fx, 7Gx, 7Hx, 7Jx, 7Kx, 7Lx, 7Mx, 7Nx, 7Px, 7Qx, 7Rx, 7Sx, 7Tx, 7Ux, 7Vx, 7Wx, 7Xx, 7Yx, 7Zx, 82x, 83x, 84x, 85x, 86x, 87x, 88x, 89x, 8Ax, 8Bx, 8Cx, 8Dx, 8Ex, 8Fx, 8Gx, 8Hx, 8Jx, 8Kx, 8Lx, 8Mx, 8Nx • 2931-CTO, 23x, 24x, 25x, 26x, 27x, 28x, 29x, 2Ax, 2Bx (to be continued)	41W0747	**

Table 40. Parts list—Overall (continued)

No.	FRU (Overall)	FRU no.	CRU ID
12	(continued) DVD-RAM/RW drive • 2847-CTO, 22x, 24x, 25x, 26x, 27x, 28x, 29x, 2Ax, 2Bx, 2Cx, 2Dx, 2Ex, 2Fx, 2Gx, 2Hx, 2Jx, 2Kx, 2Lx, 2Mx, 2Nx, 2Px, 2Qx, 2Rx, 2Sx, 2Tx, 2Ux, 2Vx, 2Wx, 2Xx, 2Yx, 2Zx, 33x, 34x, 35x, 36x, 37x, 38x, 39x, 3Dx, 3Ex, 3Kx, 3Lx, 3Mx, 3Nx, 3Px, 3Qx, 3Vx, 3Wx, 3Xx, 3Yx, 3Zx, 42x, 43x, 44x, 45x, 46x, 47x, 48x, 49x, 4Ax, 4Bx, 4Cx, 4Dx, 4Ex, 4Fx, 4Gx, 4Hx, 4Jx, 4Nx, 4Px, 4Qx, 4Rx, 4Sx, 4Tx, 4Ux, 4Vx, 4Wx, 4Xx, 4Yx, 4Zx, 52x, 53x, 54x, 55x, 56x, 57x, 58x, 59x, 5Ax, 5Bx, 5Cx, 5Dx, 5Ex, 5Fx, 5Gx, 5Hx, 5Jx, 5Kx, 5Lx, 5Mx, 5Nx, 5Px, 5Qx, 5Rx, 5Sx, 5Tx, 5Ux, 5Vx, 5Wx, 5Xx, 5Yx, 5Zx, 62x, 63x, 64x, 65x, 66x, 67x, 68x, 69x, 6Ax, 6Bx, 6Cx, 6Dx, 6Ex, 6Fx, 6Gx, 6Hx, 6Jx, 6Kx, 6Lx, 6Mx, 6Nx, 6Px, 6Qx, 6Rx, 6Sx, 6Tx, 6Ux, 6Vx, 6Wx, 6Xx, 6Yx, 6Zx, 72x, 73x, 74x, 75x, 76x, 77x, 78x, 79x, 7Ax, 7Bx, 7Cx, 7Dx, 7Ex, 7Fx, 7Jx, 7Kx, 7Lx, 7Mx, 7Nx, 7Px, 7Qx, 7Rx, 7Sx, 7Tx, 7Ux, 7Vx, 7Wx, 7Xx, 7Yx, 7Zx, 82x, 83x, 84x, 85x, 86x, 87x, 88x, 89x, 8Ax, 8Bx, 8Cx, 8Dx, 8Ex, 8Fx, 8Gx, 8Hx, 8Jx, 8Kx, 8Lx, 8Mx, 8Nx, 8Px, 8Qx, 8Rx, 8Sx, 8Tx, 8Ux, 8Vx, 8Wx, 8Xx, 8Yx, 8Zx, 92x, 93x, 94x, 95x, 96x, 97x, 98x, 99x, 9Ax, 9Bx, 9Cx, 9Dx, 9Ex, 9Fx, 9Gx, 9Hx, 9Jx, 9Kx, 9Lx, 9Mx, 9Nx, 9Px, 9Qx, 9Rx, 9Sx, 9Tx, 9Ux, 9Vx, 9Wx, 9Xx, 9Yx, 9Zx, A2x, A3x, A4x, A5x, A6x, A7x, A8x, A9x, AAx, ABx, ACx, ADx, AEx, AFx, AGx, AHx, AJx, AKx, ALx, AMx, ANx, APx, AQx, ARx, ASx, ATx, AUx, AVx, AWx, AXx, AYx, AZx, B2x, B3x, B4x, B5x, B6x, B7x, B8x, B9x, BAx, BBx, BCx, BDx, BEx, BFx, BGx, BHx, BJx, BKx, BMx, BNx, BPx, BQx, BRx, BSx, BTx, BUx, BVx, BWx, BXx, BYx, BZx, C2x, C3x, C4x, C5x, C6x, C7x, C8x, C9x, CAx, CBx, CCx, CDx, CEx, CFx, CGx, CHx, CJx, CKx, CLx, CMx, CNx, CPx, CQx, CRx, CSx, CUx, CVx, CWx, CXx, CYx, CZx, D2x, D3x, D4x, D5x, D6x, D7x, D8x, D9x, DAx, DBx, DCx, DDx, DEx, DFx, DGx, DHx, DJx, DKx, DLx, Q2x, Q3x, Q4x, Q5x, Q6x, Q7x, Q8x, Q9x, QAx, QBx, QCx, QDx, QEx, QFx, QGx, QHx, QJx, R2x, R3x, R4x, R5x, R6x, R7x, R8x, R9x, RAx, RBx, RCx, RDx, RFx, RGx, RHx, RJx, RKx, RLx, RMx, RNx, RPx, RQx, RRx, RSx, RTx, RUx, RVx, RWx, RXx • 2873-CTO, 22x, 32x, 33x • 2875-CTO, 22x, 23x, 24x, 25x, 26x, 27x, 28x, 29x, 2Ax, 2Bx, 2Cx, 2Dx, 2Ex, 2Fx, 2Gx, 2Hx, 2Jx, 2Kx, 2Lx, 2Mx, 2Nx, 2Px, 2Qx, 2Rx, 2Sx, 2Tx, 2Ux, 2Vx, 2Wx, 2Xx, 2Yx, 2Zx, 32x, 33x, 35x, 36x, 39x, 3Ax, 3Mx, 3Nx, 3Px, 3Wx, 3Xx, 3Yx, 3Zx, 42x, 43x, 44x, 45x, 46x, 47x, 48x, 49x, 4Ax, 4Bx, 4Cx, 4Dx, 4Ex, 4Fx, 4Gx, 4Hx, 4Jx, 4Kx, 4Lx, 4Nx, 4Px, 4Qx, 4Rx, 4Sx, 4Tx, 4Ux, 4Vx, 4Wx, 4Xx, 4Yx, 52x, 53x, 54x, 55x, 56x, 57x, 58x, 59x, 5Ax, 5Bx, 5Cx, 5Dx, 5Ex, 5Fx, 5Gx, 5Hx, 5Jx, 5Kx, 5Lx, 5Mx, 5Nx, 5Px, 5Qx, 5Rx, 5Sx, R2x, R3x, R4x, R5x, R6x, R7x, R8x, R9x, RAx, RBx, RCx, RDx, RFx, RGx, RHx, RJx • 5072-CTO • 0530-CTO, 22x, 32x, 52x, 53x, 54x, 55x, 56x, 57x, 59x, 5Ax, 5Bx, 5Cx, 5Dx, 5Ex, 5Fx, 5Gx, 5Jx, 5Kx, 5Lx, 5Mx, 5Nx, 5Px, 5Qx, 5Rx, 5Sx, 5Tx, 5Ux, 5Wx, 5Xx, 5Zx, 62x, 63x, 64x, 65x, 66x, 67x, 68x, 69x, 6Ax, 6Bx, 6Cx, 6Dx, 6Ex, 6Fx, 6Gx, 6Hx, 6Jx, 6Kx, 6Lx, 6Mx, 6Nx • 0553-CTO, 22x, 24x, 25x, 33x, 35x, 36x, 42x, 43x, 44x, 53x, 54x, 55x, 56x, 57x, 58x, 59x, 5Ax, 5Bx, 5Cx, 5Dx, 5Ex, 5Fx, 5Gx, 5Hx, 5Jx, 5Kx, 5Lx, 5Mx, 5Nx, 5Px, 5Qx, 5Rx, 5Tx, 5Ux, 5Vx, 5Wx, 5Xx, 5Yx, 5Zx, 62x, 63x, 64x, 65x, 66x, 67x, 68x, 69x, 6Bx, 6Cx, 6Dx, 6Fx, 6Gx, 6Hx, 6Jx, 6Kx, 6Lx, 6Mx, 6Nx, 6Px, 6Qx, 6Rx, 6Sx, 6Tx, 6Ux, 6Vx, 6Wx, 6Xx, 6Yx, 6Zx, 72x, 73x, 74x, 75x, 76x, 77x, 78x, 79x, 7Ax, 7Bx, 7Cx, 7Dx, 7Ex, 7Fx, 7Gx, 7Hx, 7Jx, 7Kx, 7Lx, 7Mx, 7Nx, 7Px, 7Qx, 7Rx, 7Sx, 7Tx, 7Ux, 7Vx, 7Wx, 7Xx, 7Yx, 7Zx, 82x, 83x, 84x, 85x, 86x, 87x, 88x, 89x, 8Ax, 8Bx, 8Cx, 8Dx, 8Ex, R2x, R3x (to be continued)	41W0747	**

Table 40. Parts list—Overall (continued)

No.	FRU (Overall)	FRU no.	CRU ID
12	(continued) DVD-RAM/RW drive • 0585-CTO, 42x, 43x, 44x, 52x, 53x, 54x, 55x, 56x, 5Ax, 5Bx, 5Dx, 5Fx, 5Hx, 5Kx, 5Mx, 5Px, 5Rx, 5Tx, 5Vx, 5Yx, 64x, 65x, 66x, 67x, 68x, 69x, 6Ax, 6Bx, 6Cx, 6Dx, 6Ex, 6Fx, 6Gx, 6Hx, 6Jx, 6Kx, 6Lx, 6Mx, 6Nx, 6Px, 6Qx, 6Rx, 6Sx, 6Tx, 6Ux, 6Xx, 6Yx, 6Zx, 74x, 75x, 76x, 77x • 0591-CTO, 52x, 53x • 4403-CTO, 32x, 33x, 34x, 35x, 36x, 37x, 38x, 39x, 3Bx, 3Cx, 3Dx, 3Fx, 3Gx, 3Hx, 3Kx, 3Lx, 3Mx, 3Px, 3Qx, 3Rx, 3Tx, 3Ux, 3Vx, 3Wx, 3Xx, 3Yx, 3Zx, 42x, 43x, 44x, 45x, 46x, 47x, 48x, 49x, 4Ax, 4Cx, 4Dx, 4Ex, 4Gx, 4Hx, 4Jx, 4Kx, 4Lx, 4Mx, 4Nx, 4Px, 4Rx, 4Sx, 4Tx, 4Ux, 4Vx, 4Wx, 4Xx, 4Yx, 4Zx, 52x, 53x, 54x, 55x, 56x, 57x, 58x, 59x, 5Ax, 5Cx, 5Ex, 5Fx, 5Gx, 5Jx, 5Kx, 5Lx, 5Mx, 5Px, 5Qx, 5Rx, 5Sx, 5Ux, 5Vx, 5Wx, 5Yx, 5Zx, 63x, 64x, 65x, 66x, 67x, 68x, 69x, 6Ax, 6Bx, 6Cx, 6Dx, 6Ex, 6Fx, 6Gx, 6Hx, 6Jx, 6Kx, 6Lx, 6Mx, 6Nx, 6Px, 6Qx, 6Rx, 6Sx, 6Tx, 6Ux, 6Vx, 6Wx, 6Xx, 6Yx, 6Zx, 72x, 73x, 74x, 75x, 76x, 77x • 4404-CTO, 32x, 33x, 34x, 35x, 36x, 37x, 38x, 39x, 3Ax, 3Bx, 3Cx, 3Dx, 3Ex, 3Fx, 3Gx, 3Hx, 3Jx, 3Kx, 3Lx, 3Mx, 3Nx, 3Px, 3Qx, 3Rx, 3Sx, 3Tx, 3Ux, 3Vx, 3Wx, 3Yx, 3Zx, 42x, 43x, 44x, 45x, 47x, 48x, 4Ax, 4Bx, 4Cx, 4Ex, 4Fx, 4Hx, 4Kx, 4Lx, 4Mx, 4Nx, 4Px, 4Qx, 4Rx, 4Sx, 4Tx, 4Ux, 4Vx, 4Wx, 4Xx, 4Yx, 4Zx • 2550-CTO, 42x, 43x, 44x, 52x, 53x, 54x, 55x, 5Ax, 5Bx, 5Dx, 5Fx, 5Hx, 5Kx, 5Mx, 5Px, 5Rx, 5Tx, 5Vx, 5Xx, 5Zx, 62x, 63x, 64x, 65x, 66x, 67x, 68x, 69x, 6Ax, 6Nx, 6Sx, 6Tx, 6Ux • 2597-CTO, 22x, 32x, 52x, 53x, 54x, 55x, 56x, 58x, 59x, 5Ax, 5Bx, 5Cx, 5Dx, 5Ex, 5Fx, 5Gx, 5Hx, 5Jx, 5Kx, 5Lx, 5Mx, 5Nx, 5Px, 5Qx, 5Rx, 5Sx, 5Tx, 5Vx, 5Wx, 5Xx, 5Yx, 5Zx, 62x, 63x, 64x, 65x, 66x, 67x, 68x, 69x, 6Ax, 6Bx, 6Cx, 6Dx, 6Ex, 6Fx, 6Gx, 6Hx, 6Jx, 6Kx, 6Lx, 6Mx, 6Nx, 6Px, 6Qx • 2598-CTO, 22x, 24x, 25x, 33x, 34x, 35x, 42x, 43x, 44x, 52x, 53x, 54x, 55x, 56x, 57x, 58x, 59x, 5Ax, 5Bx, 5Cx, 5Dx, 5Ex, 5Fx, 5Gx, 5Hx, 5Jx, 5Kx, 5Lx, 5Mx, 5Nx, 5Px, 5Qx, 5Rx, 5Sx, 5Tx, 5Vx, 5Wx, 5Xx, 5Yx, 5Zx, 62x, 63x, 64x, 65x, 66x, 67x, 68x, 69x, 6Ax, 6Bx, 6Cx, 6Dx, 6Ex, 6Fx, 6Gx, 6Jx, 6Kx, 6Lx, 6Nx, 6Px, 6Qx, 6Rx, 6Sx, 6Tx, 6Ux, 6Vx, 6Wx, 6Xx, 6Yx, 6Zx, 72x, 74x, 75x, 76x, 77x, 78x, 79x, 7Ax, 7Bx, 7Cx, 7Dx, 7Ex, 7Fx, 7Gx, 7Hx, 7Jx, 7Kx, 7Qx, 7Rx, 7Sx, 7Tx, 7Ux, 7Vx, 7Wx, 7Xx, 7Yx, 7Zx, 82x, 83x, 84x, 85x, R2x, R3x • 2599-CTO, 52x, 53x • 4444-CTO, 32x, 33x, 34x, 35x, 36x, 37x, 38x, 39x, 3Ax, 3Bx, 3Cx, 3Dx, 3Ex, 3Fx, 3Gx, 3Hx, 3Jx, 3Kx, 3Lx, 3Mx, 3Nx, 3Px, 3Qx, 3Rx, 3Sx, 3Tx, 3Ux, 3Vx, 3Wx, 3Yx, 3Zx, 42x, 43x, 44x, 45x, 46x, 47x, 48x, 49x, 4Ax, 4Bx, 4Cx, 4Dx, 4Ex, 4Fx, 4Gx, 4Hx, 4Jx, 4Kx, 4Lx, 4Mx, 4Nx, 4Px, 4Qx, 4Rx, 4Sx, 4Tx, 4Ux, 4Vx, 4Wx, 4Xx, 4Yx, 4Zx, 52x, 53x, 54x, 55x, 56x, 57x, 58x, 59x, 5Ax, 5Bx, 5Cx, 5Dx, 5Ex • 4447-CTO, 32x, 33x, 34x, 35x, 36x, 37x, 38x, 39x, 3Ax, 3Bx, 3Cx, 3Dx, 3Ex, 3Fx, 3Gx, 3Hx, 7Lx, 7Mx, 7Nx, 7Px	41W0747	**

Table 40. Parts list—Overall (continued)

No.	FRU (Overall)	FRU no.	CRU ID
12	DVD-RAM/RW drive • 0616-CTO, 22x, 25x, 26x, 27x, 28x, 29x, 2Cx, 2Dx • 2842-CTO, 22x, 23x, 24x, 25x, 26x, 27x, 28x, 29x, 2Ax, 2Bx, 2Cx, 2Dx, 2Ex, 33x, 34x, 35x, 36x, 37x, 39x, 3Bx, 3Dx, 3Fx, 3Gx, 3Hx, 3Px, 3Qx, 3Rx, 3Sx, 3Tx, 3Ux, 3Vx, 42x, 43x, 44x, 45x, 46x, 47x, 48x, 49x, 4Ax, 4Bx, 4Cx, 4Dx, 4Ex, 4Fx, 4Gx, 4Hx, 4Jx, 4Kx, 4Lx, 4Mx, 4Nx, 4Px, 4Qx, 4Rx, 4Sx, 4Tx, 4Ux, 4Vx, 4Wx, 4Xx, 4Yx, 4Zx, 52x, 53x, 54x, 55x, 56x, 57x, 58x, 59x, 5Ax, 5Bx, 5Cx, 5Dx, 5Ex, 5Fx, 5Gx, 5Hx, 5Jx, 5Kx, 5Lx, 5Mx, 5Nx, 5Px, 5Qx, 5Rx, 5Sx, 5Tx, 5Ux, 5Vx, 5Wx, 5Xx, 5Yx, 5Zx, 62x, 63x, 64x, 65x, 66x, 67x, 68x, 69x, 6Ax, 6Bx, 6Cx, 6Dx, 6Ex, 6Fx, 6Gx, 6Hx, 6Jx, 6Kx, 6Lx, 6Mx, 6Nx, 6Px, 6Qx, 6Rx, 6Sx, 6Tx, 6Ux, 6Vx, 6Wx, 6Xx, 6Yx, 6Zx, 72x, 73x, 74x, 75x, 76x, 77x, 78x, 7Bx, 7Cx, 7Dx, 7Ex, 7Fx, 7Gx, 7Hx, 7Jx, 7Px, 7Qx, 7Rx, 7Sx, 7Tx, 7Ux, 7Vx, 7Wx, 7Xx, 7Yx, 7Zx, 82x, 83x, 84x, 85x, 86x, 87x, 88x, 89x, 8Ax, 8Bx, 8Cx, 8Dx, 8Ex, 8Fx, 8Gx, 8Hx, 8Jx, 8Kx, 8Lx, 8Mx, 8Nx, 8Rx, 8Sx, 8Tx, 8Ux, 8Vx, 8Wx, 8Xx, 8Yx, 8Zx, 92x, 93x, 94x, 95x, 96x, 97x, 98x, 99x, 9Ax, 9Bx, 9Cx, 9Dx, 9Ex, 9Fx, 9Gx, 9Hx, 9Jx, 9Kx, 9Lx, 9Mx, 9Nx, 9Px, 9Qx, 9Rx, 9Sx, 9Tx, 9Ux, 9Vx, 9Wx, 9Xx, 9Yx, 9Zx, A2x, A3x, A4x, A5x, A6x, A7x, A8x, A9x, AAx, ABx, ACx, ADx, AEx, AFx, AGx, AHx, AJx, AKx, ALx, AMx, ANx, APx, AQx, ARx, ASx, ATx, AUx, AVx, AWx, AXx, AYx, AZx, B2x, B3x, B4x, B5x, B6x, B7x, B8x, B9x, BAx, BBx, BCx, BDx, BEx, BFx, BGx, BHx, BJx, BKx, BMx, BNx, BPx, BQx, BRx, BSx, BTx, BUx, BVx, BWx, BXx, BYx, BZx, C2x, C3x, C4x, C5x, C6x, C7x, C8x, C9x, CAx, CBx, CCx, CDx, CEx, CFx, CGx, CHx, CJx, CKx, CLx, CMx, CNx, CPx, CQx, CRx, CSx, CUx, CVx, CWx, CXx, CYx, CZx, D2x, D3x, D4x, D5x, D6x, D7x, D8x, D9x, DAx, DBx, DCx, DDx, DEx, DFx, DGx, DHx, DJx, DKx, DLx, DMx, DNx, DPx, DQx, DRx, DSx, DTx, DUx, DVx, DWx, DXx, DYx, DZx, E2x, E3x, E4x, E5x, E6x, E7x, E8x, E9x, EAx, EBx, ECx, EDx, EEx, EFx, EGx, EHx, EJx, EKx, ELx, EMx, ENx, EPx, EQx, ERx, ESx, ETx, EUx, EVx, EWx, EXx, EYx, EZx, F2x, F3x, F4x, F5x, F6x, F7x, F8x, F9x, FAx, FBx, FCx, FDx, FEx, FFx, FGx, FHx, FJx, FKx, FLx, FMx, FNx, FPx, FQx, FSx, FTx, FUx, FVx, FWx, FXx, FYx, FZx, G2x, G3x, G4x, G5x, G6x, G7x, G8x, G9x, GBx, GCx, GDx, GEx, GFx, GGx, GHx, GJx, GKx, GLx, GMx, GNx, GPx, GQx, GRx, GSx, GTx, GUx, GVx, GWx, GXx, GYx, GZx, H2x, H3x, H4x, H5x, H6x, H7x, H8x, H9x, HAx, HBx, HCx, HDx, HEx, HFx, HGx, HHx, HJx, HKx, HLx, HMx, HNx, HPx, HQx, HRx, HSx, HTx, HUx, HVx, HWx, HXx, HYx, HZx, J2x, J3x, J4x, J5x, J6x, J7x, J8x, J9x, JAx, JBx, JCx, JDx, JEx, JFx, JGx, JHx, JJx, JKx, JLx, JMx, JNx, JPx, JQx, JRx, JSx, JTx, JUx, JVx, JWx, JXx, JYx, JZx, K2x, K3x, K4x, K5x, K6x, K7x, K8x, K9x, KAx, KBx, KCx, KDx, KEx, KFx, KGx, KHx, KJx, KKx, KLx, KMx, KNx, KPx, KQx, KRx, KSx, KTx, KUx, KVx, KWx, KXx, KYx, KZx, L2x, L3x, L4x, L5x, L6x, L7x • 2874-CTO, 22x, 32x, 33x, 34x, 35x, 36x, 37x, 39x, 3Bx, 3Ex, 3Gx, 3Kx, 3Lx, 3Mx, 3Nx, 3Px, 3Qx, 3Rx, 3Sx, 46x, 47x, 48x, 49x, 4Ax, 4Bx, 4Cx, 4Dx, 4Fx, 4Gx, 4Hx, 4Jx, 4Kx, 4Lx, 4Mx, 4Nx, 4Px, 4Qx, 52x, 53x, 54x, 55x, 56x, 57x, 58x, 59x, 5Ax, 5Bx, 5Cx, 5Dx, 5Ex, 5Fx, 5Gx, 5Hx, 5Jx, 5Kx, 5Lx, 5Mx, 5Nx, 5Px, 5Qx, 5Rx, 62x, 63x, 64x, 65x, 66x, 67x, 68x, 69x, 6Ax, 6Bx, 6Cx, 6Dx, 6Ex, 6Fx, 6Gx, 6Hx, 6Jx, 6Kx, 6Lx, 6Mx, 6Nx, 6Px, 6Qx, 6Rx, 6Sx, 6Tx, 6Ux, 6Vx, 6Wx, 6Xx, 6Yx, 6Zx, 72x, 73x, 74x, 75x, 76x, 77x, 78x, 79x, 7Ax, 7Bx, 7Cx, 7Dx, 7Ex, 7Fx, 7Gx, 7Hx, 7Jx, 7Kx, 7Lx, 7Mx, 7Nx, 7Px, 7Qx, 7Rx, 7Sx, 7Tx, 7Ux, 7Vx, 7Wx, 7Xx, 7Yx, 7Zx, 82x, 83x, 84x, 85x, 86x, 87x, 88x, 89x, 8Ax, 8Bx, 8Cx, 8Dx, 8Ex, 8Fx, 8Gx, 8Hx, 8Jx, 8Kx, 8Lx, 8Mx, 8Nx • 2931-CTO, 23x, 24x, 25x, 26x, 27x, 28x, 29x, 2Ax, 2Bx (to be continued)	75Y5029	**

Table 40. Parts list—Overall (continued)

No.	FRU (Overall)	FRU no.	CRU ID
12	(continued) DVD-RAM/RW drive • 2847-CTO, 22x, 24x, 25x, 26x, 27x, 28x, 29x, 2Ax, 2Bx, 2Cx, 2Dx, 2Ex, 2Fx, 2Gx, 2Hx, 2Jx, 2Kx, 2Lx, 2Mx, 2Nx, 2Px, 2Qx, 2Rx, 2Sx, 2Tx, 2Ux, 2Vx, 2Wx, 2Xx, 2Yx, 2Zx, 33x, 34x, 35x, 36x, 37x, 38x, 39x, 3Dx, 3Ex, 3Kx, 3Lx, 3Mx, 3Nx, 3Px, 3Qx, 3Vx, 3Wx, 3Xx, 3Yx, 3Zx, 42x, 43x, 44x, 45x, 46x, 47x, 48x, 49x, 4Ax, 4Bx, 4Cx, 4Dx, 4Ex, 4Fx, 4Gx, 4Hx, 4Jx, 4Nx, 4Px, 4Qx, 4Rx, 4Sx, 4Tx, 4Ux, 4Vx, 4Wx, 4Xx, 4Yx, 4Zx, 52x, 53x, 54x, 55x, 56x, 57x, 58x, 59x, 5Ax, 5Bx, 5Cx, 5Dx, 5Ex, 5Fx, 5Gx, 5Hx, 5Jx, 5Kx, 5Lx, 5Mx, 5Nx, 5Px, 5Qx, 5Rx, 5Sx, 5Tx, 5Ux, 5Vx, 5Wx, 5Xx, 5Yx, 5Zx, 62x, 63x, 64x, 65x, 66x, 67x, 68x, 69x, 6Ax, 6Bx, 6Cx, 6Dx, 6Ex, 6Fx, 6Gx, 6Hx, 6Jx, 6Kx, 6Lx, 6Mx, 6Nx, 6Px, 6Qx, 6Rx, 6Sx, 6Tx, 6Ux, 6Vx, 6Wx, 6Xx, 6Yx, 6Zx, 72x, 73x, 74x, 75x, 76x, 77x, 78x, 79x, 7Ax, 7Bx, 7Cx, 7Dx, 7Ex, 7Fx, 7Jx, 7Kx, 7Lx, 7Mx, 7Nx, 7Px, 7Qx, 7Rx, 7Sx, 7Tx, 7Ux, 7Vx, 7Wx, 7Xx, 7Yx, 7Zx, 82x, 83x, 84x, 85x, 86x, 87x, 88x, 89x, 8Ax, 8Bx, 8Cx, 8Dx, 8Ex, 8Fx, 8Gx, 8Hx, 8Jx, 8Kx, 8Lx, 8Mx, 8Nx, 8Px, 8Qx, 8Rx, 8Sx, 8Tx, 8Ux, 8Vx, 8Wx, 8Xx, 8Yx, 8Zx, 92x, 93x, 94x, 95x, 96x, 97x, 98x, 99x, 9Ax, 9Bx, 9Cx, 9Dx, 9Ex, 9Fx, 9Gx, 9Hx, 9Jx, 9Kx, 9Lx, 9Mx, 9Nx, 9Px, 9Qx, 9Rx, 9Sx, 9Tx, 9Ux, 9Vx, 9Wx, 9Xx, 9Yx, 9Zx, A2x, A3x, A4x, A5x, A6x, A7x, A8x, A9x, AAx, ABx, ACx, ADx, AEx, AFx, AGx, AHx, AJx, AKx, ALx, AMx, ANx, APx, AQx, ARx, ASx, ATx, AUx, AVx, AWx, AXx, AYx, AZx, B2x, B3x, B4x, B5x, B6x, B7x, B8x, B9x, BAx, BBx, BCx, BDx, BEx, BFx, BGx, BHx, BJx, BKx, BMx, BNx, BPx, BQx, BRx, BSx, BTx, BUx, BVx, BWx, BXx, BYx, BZx, C2x, C3x, C4x, C5x, C6x, C7x, C8x, C9x, CAx, CBx, CCx, CDx, CEx, CFx, CGx, CHx, CJx, CKx, CLx, CMx, CNx, CPx, CQx, CRx, CSx, CUx, CVx, CWx, CXx, CYx, CZx, D2x, D3x, D4x, D5x, D6x, D7x, D8x, D9x, DAx, DBx, DCx, DDx, DEx, DFx, DGx, DHx, DJx, DKx, DLx, Q2x, Q3x, Q4x, Q5x, Q6x, Q7x, Q8x, Q9x, QAx, QBx, QCx, QDx, QEx, QFx, QGx, QHx, QJx, R2x, R3x, R4x, R5x, R6x, R7x, R8x, R9x, RAx, RBx, RCx, RDx, RFx, RGx, RHx, RJx, RKx, RLx, RMx, RNx, RPx, RQx, RRx, RSx, RTx, RUx, RVx, RWx, RXx • 2873-CTO, 22x, 32x, 33x • 2875-CTO, 22x, 23x, 24x, 25x, 26x, 27x, 28x, 29x, 2Ax, 2Bx, 2Cx, 2Dx, 2Ex, 2Fx, 2Gx, 2Hx, 2Jx, 2Kx, 2Lx, 2Mx, 2Nx, 2Px, 2Qx, 2Rx, 2Sx, 2Tx, 2Ux, 2Vx, 2Wx, 2Xx, 2Yx, 2Zx, 32x, 33x, 35x, 36x, 39x, 3Ax, 3Mx, 3Nx, 3Px, 3Wx, 3Xx, 3Yx, 3Zx, 42x, 43x, 44x, 45x, 46x, 47x, 48x, 49x, 4Ax, 4Bx, 4Cx, 4Dx, 4Ex, 4Fx, 4Gx, 4Hx, 4Jx, 4Kx, 4Lx, 4Nx, 4Px, 4Qx, 4Rx, 4Sx, 4Tx, 4Ux, 4Vx, 4Wx, 4Xx, 4Yx, 52x, 53x, 54x, 55x, 56x, 57x, 58x, 59x, 5Ax, 5Bx, 5Cx, 5Dx, 5Ex, 5Fx, 5Gx, 5Hx, 5Jx, 5Kx, 5Lx, 5Mx, 5Nx, 5Px, 5Qx, 5Rx, 5Sx, R2x, R3x, R4x, R5x, R6x, R7x, R8x, R9x, RAx, RBx, RCx, RDx, RFx, RGx, RHx, RJx • 5072-CTO • 0530-CTO, 22x, 32x, 52x, 53x, 54x, 55x, 56x, 57x, 59x, 5Ax, 5Bx, 5Cx, 5Dx, 5Ex, 5Fx, 5Gx, 5Jx, 5Kx, 5Lx, 5Mx, 5Nx, 5Px, 5Qx, 5Rx, 5Sx, 5Tx, 5Ux, 5Wx, 5Xx, 5Zx, 62x, 63x, 64x, 65x, 66x, 67x, 68x, 69x, 6Ax, 6Bx, 6Cx, 6Dx, 6Ex, 6Fx, 6Gx, 6Hx, 6Jx, 6Kx, 6Lx, 6Mx, 6Nx • 0553-CTO, 22x, 24x, 25x, 33x, 35x, 36x, 42x, 43x, 44x, 53x, 54x, 55x, 56x, 57x, 58x, 59x, 5Ax, 5Bx, 5Cx, 5Dx, 5Ex, 5Fx, 5Gx, 5Hx, 5Jx, 5Kx, 5Lx, 5Mx, 5Nx, 5Px, 5Qx, 5Rx, 5Tx, 5Ux, 5Vx, 5Wx, 5Xx, 5Yx, 5Zx, 62x, 63x, 64x, 65x, 66x, 67x, 68x, 69x, 6Bx, 6Cx, 6Dx, 6Fx, 6Gx, 6Hx, 6Jx, 6Kx, 6Lx, 6Mx, 6Nx, 6Px, 6Qx, 6Rx, 6Sx, 6Tx, 6Ux, 6Vx, 6Wx, 6Xx, 6Yx, 6Zx, 72x, 73x, 74x, 75x, 76x, 77x, 78x, 79x, 7Ax, 7Bx, 7Cx, 7Dx, 7Ex, 7Fx, 7Gx, 7Hx, 7Jx, 7Kx, 7Lx, 7Mx, 7Nx, 7Px, 7Qx, 7Rx, 7Sx, 7Tx, 7Ux, 7Vx, 7Wx, 7Xx, 7Yx, 7Zx, 82x, 83x, 84x, 85x, 86x, 87x, 88x, 89x, 8Ax, 8Bx, 8Cx, 8Dx, 8Ex, R2x, R3x (to be continued)	75Y5029	**

Table 40. Parts list—Overall (continued)

No.	FRU (Overall)	FRU no.	CRU ID
12	(continued) DVD-RAM/RW drive • 0585-CTO, 42x, 43x, 44x, 52x, 53x, 54x, 55x, 56x, 5Ax, 5Bx, 5Dx, 5Fx, 5Hx, 5Kx, 5Mx, 5Px, 5Rx, 5Tx, 5Vx, 5Yx, 64x, 65x, 66x, 67x, 68x, 69x, 6Ax, 6Bx, 6Cx, 6Dx, 6Ex, 6Fx, 6Gx, 6Hx, 6Jx, 6Kx, 6Lx, 6Mx, 6Nx, 6Px, 6Qx, 6Rx, 6Sx, 6Tx, 6Ux, 6Xx, 6Yx, 6Zx, 74x, 75x, 76x, 77x • 0591-CTO, 52x, 53x • 4403-CTO, 32x, 33x, 34x, 35x, 36x, 37x, 38x, 39x, 3Bx, 3Cx, 3Dx, 3Fx, 3Gx, 3Hx, 3Kx, 3Lx, 3Mx, 3Px, 3Qx, 3Rx, 3Tx, 3Ux, 3Vx, 3Wx, 3Xx, 3Yx, 3Zx, 42x, 43x, 44x, 45x, 46x, 47x, 48x, 49x, 4Ax, 4Cx, 4Dx, 4Ex, 4Gx, 4Hx, 4Jx, 4Kx, 4Lx, 4Mx, 4Nx, 4Px, 4Rx, 4Sx, 4Tx, 4Ux, 4Vx, 4Wx, 4Xx, 4Yx, 4Zx, 52x, 53x, 54x, 55x, 56x, 57x, 58x, 59x, 5Ax, 5Cx, 5Ex, 5Fx, 5Gx, 5Jx, 5Kx, 5Lx, 5Mx, 5Px, 5Qx, 5Rx, 5Sx, 5Ux, 5Vx, 5Wx, 5Yx, 5Zx, 63x, 64x, 65x, 66x, 67x, 68x, 69x, 6Ax, 6Bx, 6Cx, 6Dx, 6Ex, 6Fx, 6Gx, 6Hx, 6Jx, 6Kx, 6Lx, 6Mx, 6Nx, 6Px, 6Qx, 6Rx, 6Sx, 6Tx, 6Ux, 6Vx, 6Wx, 6Xx, 6Yx, 6Zx, 72x, 73x, 74x, 75x, 76x, 77x • 4404-CTO, 32x, 33x, 34x, 35x, 36x, 37x, 38x, 39x, 3Ax, 3Bx, 3Cx, 3Dx, 3Ex, 3Fx, 3Gx, 3Hx, 3Jx, 3Kx, 3Lx, 3Mx, 3Nx, 3Px, 3Qx, 3Rx, 3Sx, 3Tx, 3Ux, 3Vx, 3Wx, 3Yx, 3Zx, 42x, 43x, 44x, 45x, 47x, 48x, 4Ax, 4Bx, 4Cx, 4Ex, 4Fx, 4Hx, 4Kx, 4Lx, 4Mx, 4Nx, 4Px, 4Qx, 4Rx, 4Sx, 4Tx, 4Ux, 4Vx, 4Wx, 4Xx, 4Yx, 4Zx • 2550-CTO, 42x, 43x, 44x, 52x, 53x, 54x, 55x, 5Ax, 5Bx, 5Dx, 5Fx, 5Hx, 5Kx, 5Mx, 5Px, 5Rx, 5Tx, 5Vx, 5Xx, 5Zx, 62x, 63x, 64x, 65x, 66x, 67x, 68x, 69x, 6Ax, 6Nx, 6Sx, 6Tx, 6Ux • 2597-CTO, 22x, 32x, 52x, 53x, 54x, 55x, 56x, 58x, 59x, 5Ax, 5Bx, 5Cx, 5Dx, 5Ex, 5Fx, 5Gx, 5Hx, 5Jx, 5Kx, 5Lx, 5Mx, 5Nx, 5Px, 5Qx, 5Rx, 5Sx, 5Tx, 5Vx, 5Wx, 5Xx, 5Yx, 5Zx, 62x, 63x, 64x, 65x, 66x, 67x, 68x, 69x, 6Ax, 6Bx, 6Cx, 6Dx, 6Ex, 6Fx, 6Gx, 6Hx, 6Jx, 6Kx, 6Lx, 6Mx, 6Nx, 6Px, 6Qx • 2598-CTO, 22x, 24x, 25x, 33x, 34x, 35x, 42x, 43x, 44x, 52x, 53x, 54x, 55x, 56x, 57x, 58x, 59x, 5Ax, 5Bx, 5Cx, 5Dx, 5Ex, 5Fx, 5Gx, 5Hx, 5Jx, 5Kx, 5Lx, 5Mx, 5Nx, 5Px, 5Qx, 5Rx, 5Sx, 5Tx, 5Vx, 5Wx, 5Xx, 5Yx, 5Zx, 62x, 63x, 64x, 65x, 66x, 67x, 68x, 69x, 6Ax, 6Bx, 6Cx, 6Dx, 6Ex, 6Fx, 6Gx, 6Jx, 6Kx, 6Lx, 6Nx, 6Px, 6Qx, 6Rx, 6Sx, 6Tx, 6Ux, 6Vx, 6Wx, 6Xx, 6Yx, 6Zx, 72x, 74x, 75x, 76x, 77x, 78x, 79x, 7Ax, 7Bx, 7Cx, 7Dx, 7Ex, 7Fx, 7Gx, 7Hx, 7Jx, 7Kx, 7Qx, 7Rx, 7Sx, 7Tx, 7Ux, 7Vx, 7Wx, 7Xx, 7Yx, 7Zx, 82x, 83x, 84x, 85x, R2x, R3x • 2599-CTO, 52x, 53x • 4444-CTO, 32x, 33x, 34x, 35x, 36x, 37x, 38x, 39x, 3Ax, 3Bx, 3Cx, 3Dx, 3Ex, 3Fx, 3Gx, 3Hx, 3Jx, 3Kx, 3Lx, 3Mx, 3Nx, 3Px, 3Qx, 3Rx, 3Sx, 3Tx, 3Ux, 3Vx, 3Wx, 3Yx, 3Zx, 42x, 43x, 44x, 45x, 46x, 47x, 48x, 49x, 4Ax, 4Bx, 4Cx, 4Dx, 4Ex, 4Fx, 4Gx, 4Hx, 4Jx, 4Kx, 4Lx, 4Mx, 4Nx, 4Px, 4Qx, 4Rx, 4Sx, 4Tx, 4Ux, 4Vx, 4Wx, 4Xx, 4Yx, 4Zx, 52x, 53x, 54x, 55x, 56x, 57x, 58x, 59x, 5Ax, 5Bx, 5Cx, 5Dx, 5Ex • 4447-CTO, 32x, 33x, 34x, 35x, 36x, 37x, 38x, 39x, 3Ax, 3Bx, 3Cx, 3Dx, 3Ex, 3Fx, 3Gx, 3Hx, 7Lx, 7Mx, 7Nx, 7Px	75Y5029	**

Table 40. Parts list—Overall (continued)

No.	FRU (Overall)	FRU no.	CRU ID
12	DVD-RAM/RW drive • 0616-CTO, 22x, 25x, 26x, 27x, 28x, 29x, 2Cx, 2Dx • 2842-CTO, 22x, 23x, 24x, 25x, 26x, 27x, 28x, 29x, 2Ax, 2Bx, 2Cx, 2Dx, 2Ex, 33x, 34x, 35x, 36x, 37x, 39x, 3Bx, 3Dx, 3Fx, 3Gx, 3Hx, 3Px, 3Qx, 3Rx, 3Sx, 3Tx, 3Ux, 3Vx, 42x, 43x, 44x, 45x, 46x, 47x, 48x, 49x, 4Ax, 4Bx, 4Cx, 4Dx, 4Ex, 4Fx, 4Gx, 4Hx, 4Jx, 4Kx, 4Lx, 4Mx, 4Nx, 4Px, 4Qx, 4Rx, 4Sx, 4Tx, 4Ux, 4Vx, 4Wx, 4Xx, 4Yx, 4Zx, 52x, 53x, 54x, 55x, 56x, 57x, 58x, 59x, 5Ax, 5Bx, 5Cx, 5Dx, 5Ex, 5Fx, 5Gx, 5Hx, 5Jx, 5Kx, 5Lx, 5Mx, 5Nx, 5Px, 5Qx, 5Rx, 5Sx, 5Tx, 5Ux, 5Vx, 5Wx, 5Xx, 5Yx, 5Zx, 62x, 63x, 64x, 65x, 66x, 67x, 68x, 69x, 6Ax, 6Bx, 6Cx, 6Dx, 6Ex, 6Fx, 6Gx, 6Hx, 6Jx, 6Kx, 6Lx, 6Mx, 6Nx, 6Px, 6Qx, 6Rx, 6Sx, 6Tx, 6Ux, 6Vx, 6Wx, 6Xx, 6Yx, 6Zx, 72x, 73x, 74x, 75x, 76x, 77x, 78x, 7Bx, 7Cx, 7Dx, 7Ex, 7Fx, 7Gx, 7Hx, 7Jx, 7Px, 7Qx, 7Rx, 7Sx, 7Tx, 7Ux, 7Vx, 7Wx, 7Xx, 7Yx, 7Zx, 82x, 83x, 84x, 85x, 86x, 87x, 88x, 89x, 8Ax, 8Bx, 8Cx, 8Dx, 8Ex, 8Fx, 8Gx, 8Hx, 8Jx, 8Kx, 8Lx, 8Mx, 8Nx, 8Rx, 8Sx, 8Tx, 8Ux, 8Vx, 8Wx, 8Xx, 8Yx, 8Zx, 92x, 93x, 94x, 95x, 96x, 97x, 98x, 99x, 9Ax, 9Bx, 9Cx, 9Dx, 9Ex, 9Fx, 9Gx, 9Hx, 9Jx, 9Kx, 9Lx, 9Mx, 9Nx, 9Px, 9Qx, 9Rx, 9Sx, 9Tx, 9Ux, 9Vx, 9Wx, 9Xx, 9Yx, 9Zx, A2x, A3x, A4x, A5x, A6x, A7x, A8x, A9x, AAx, ABx, ACx, ADx, AEx, AFx, AGx, AHx, AJx, AKx, ALx, AMx, ANx, APx, AQx, ARx, ASx, ATx, AUx, AVx, AWx, AXx, AYx, AZx, B2x, B3x, B4x, B5x, B6x, B7x, B8x, B9x, BAx, BBx, BCx, BDx, BEx, BFx, BGx, BHx, BJx, BKx, BMx, BNx, BPx, BQx, BRx, BSx, BTx, BUx, BVx, BWx, BXx, BYx, BZx, C2x, C3x, C4x, C5x, C6x, C7x, C8x, C9x, CAx, CBx, CCx, CDx, CEx, CFx, CGx, CHx, CJx, CKx, CLx, CMx, CNx, CPx, CQx, CRx, CSx, CUx, CVx, CWx, CXx, CYx, CZx, D2x, D3x, D4x, D5x, D6x, D7x, D8x, D9x, DAx, DBx, DCx, DDx, DEx, DFx, DGx, DHx, DJx, DKx, DLx, DMx, DNx, DPx, DQx, DRx, DSx, DTx, DUx, DVx, DWx, DXx, DYx, DZx, E2x, E3x, E4x, E5x, E6x, E7x, E8x, E9x, EAx, EBx, ECx, EDx, EEx, EFx, EGx, EHx, EJx, EKx, ELx, EMx, ENx, EPx, EQx, ERx, ESx, ETx, EUx, EVx, EWx, EXx, EYx, EZx, F2x, F3x, F4x, F5x, F6x, F7x, F8x, F9x, FAx, FBx, FCx, FDx, FEx, FFx, FGx, FHx, FJx, FKx, FLx, FMx, FNx, FPx, FQx, FSx, FTx, FUx, FVx, FWx, FXx, FYx, FZx, G2x, G3x, G4x, G5x, G6x, G7x, G8x, G9x, GBx, GCx, GDx, GEx, GFx, GGx, GHx, GJx, GKx, GLx, GMx, GNx, GPx, GQx, GRx, GSx, GTx, GUx, GVx, GWx, GXx, GYx, GZx, H2x, H3x, H4x, H5x, H6x, H7x, H8x, H9x, HAx, HBx, HCx, HDx, HEx, HFx, HGx, HHx, HJx, HKx, HLx, HMx, HNx, HPx, HQx, HRx, HSx, HTx, HUx, HVx, HWx, HXx, HYx, HZx, J2x, J3x, J4x, J5x, J6x, J7x, J8x, J9x, JAx, JBx, JCx, JDx, JEx, JFx, JGx, JHx, JJx, JKx, JLx, JMx, JNx, JPx, JQx, JRx, JSx, JTx, JUx, JVx, JWx, JXx, JYx, JZx, K2x, K3x, K4x, K5x, K6x, K7x, K8x, K9x, KAx, KBx, KCx, KDx, KEx, KFx, KGx, KHx, KJx, KKx, KLx, KMx, KNx, KPx, KQx, KRx, KSx, KTx, KUx, KVx, KWx, KXx, KYx, KZx, L2x, L3x, L4x, L5x, L6x, L7x • 2874-CTO, 22x, 32x, 33x, 34x, 35x, 36x, 37x, 39x, 3Bx, 3Ex, 3Gx, 3Kx, 3Lx, 3Mx, 3Nx, 3Px, 3Qx, 3Rx, 3Sx, 46x, 47x, 48x, 49x, 4Ax, 4Bx, 4Cx, 4Dx, 4Fx, 4Gx, 4Hx, 4Jx, 4Kx, 4Lx, 4Mx, 4Nx, 4Px, 4Qx, 52x, 53x, 54x, 55x, 56x, 57x, 58x, 59x, 5Ax, 5Bx, 5Cx, 5Dx, 5Ex, 5Fx, 5Gx, 5Hx, 5Jx, 5Kx, 5Lx, 5Mx, 5Nx, 5Px, 5Qx, 5Rx, 62x, 63x, 64x, 65x, 66x, 67x, 68x, 69x, 6Ax, 6Bx, 6Cx, 6Dx, 6Ex, 6Fx, 6Gx, 6Hx, 6Jx, 6Kx, 6Lx, 6Mx, 6Nx, 6Px, 6Qx, 6Rx, 6Sx, 6Tx, 6Ux, 6Vx, 6Wx, 6Xx, 6Yx, 6Zx, 72x, 73x, 74x, 75x, 76x, 77x, 78x, 79x, 7Ax, 7Bx, 7Cx, 7Dx, 7Ex, 7Fx, 7Gx, 7Hx, 7Jx, 7Kx, 7Lx, 7Mx, 7Nx, 7Px, 7Qx, 7Rx, 7Sx, 7Tx, 7Ux, 7Vx, 7Wx, 7Xx, 7Yx, 7Zx, 82x, 83x, 84x, 85x, 86x, 87x, 88x, 89x, 8Ax, 8Bx, 8Cx, 8Dx, 8Ex, 8Fx, 8Gx, 8Hx, 8Jx, 8Kx, 8Lx, 8Mx, 8Nx • 2931-CTO, 23x, 24x, 25x, 26x, 27x, 28x, 29x, 2Ax, 2Bx (to be continued)	41W0753	**

Table 40. Parts list—Overall (continued)

No.	FRU (Overall)	FRU no.	CRU ID
12	(continued) DVD-RAM/RW drive • 2847-CTO, 22x, 24x, 25x, 26x, 27x, 28x, 29x, 2Ax, 2Bx, 2Cx, 2Dx, 2Ex, 2Fx, 2Gx, 2Hx, 2Jx, 2Kx, 2Lx, 2Mx, 2Nx, 2Px, 2Qx, 2Rx, 2Sx, 2Tx, 2Ux, 2Vx, 2Wx, 2Xx, 2Yx, 2Zx, 33x, 34x, 35x, 36x, 37x, 38x, 39x, 3Dx, 3Ex, 3Kx, 3Lx, 3Mx, 3Nx, 3Px, 3Qx, 3Vx, 3Wx, 3Xx, 3Yx, 3Zx, 42x, 43x, 44x, 45x, 46x, 47x, 48x, 49x, 4Ax, 4Bx, 4Cx, 4Dx, 4Ex, 4Fx, 4Gx, 4Hx, 4Jx, 4Nx, 4Px, 4Qx, 4Rx, 4Sx, 4Tx, 4Ux, 4Vx, 4Wx, 4Xx, 4Yx, 4Zx, 52x, 53x, 54x, 55x, 56x, 57x, 58x, 59x, 5Ax, 5Bx, 5Cx, 5Dx, 5Ex, 5Fx, 5Gx, 5Hx, 5Jx, 5Kx, 5Lx, 5Mx, 5Nx, 5Px, 5Qx, 5Rx, 5Sx, 5Tx, 5Ux, 5Vx, 5Wx, 5Xx, 5Yx, 5Zx, 62x, 63x, 64x, 65x, 66x, 67x, 68x, 69x, 6Ax, 6Bx, 6Cx, 6Dx, 6Ex, 6Fx, 6Gx, 6Hx, 6Jx, 6Kx, 6Lx, 6Mx, 6Nx, 6Px, 6Qx, 6Rx, 6Sx, 6Tx, 6Ux, 6Vx, 6Wx, 6Xx, 6Yx, 6Zx, 72x, 73x, 74x, 75x, 76x, 77x, 78x, 79x, 7Ax, 7Bx, 7Cx, 7Dx, 7Ex, 7Fx, 7Jx, 7Kx, 7Lx, 7Mx, 7Nx, 7Px, 7Qx, 7Rx, 7Sx, 7Tx, 7Ux, 7Vx, 7Wx, 7Xx, 7Yx, 7Zx, 82x, 83x, 84x, 85x, 86x, 87x, 88x, 89x, 8Ax, 8Bx, 8Cx, 8Dx, 8Ex, 8Fx, 8Gx, 8Hx, 8Jx, 8Kx, 8Lx, 8Mx, 8Nx, 8Px, 8Qx, 8Rx, 8Sx, 8Tx, 8Ux, 8Vx, 8Wx, 8Xx, 8Yx, 8Zx, 92x, 93x, 94x, 95x, 96x, 97x, 98x, 99x, 9Ax, 9Bx, 9Cx, 9Dx, 9Ex, 9Fx, 9Gx, 9Hx, 9Jx, 9Kx, 9Lx, 9Mx, 9Nx, 9Px, 9Qx, 9Rx, 9Sx, 9Tx, 9Ux, 9Vx, 9Wx, 9Xx, 9Yx, 9Zx, A2x, A3x, A4x, A5x, A6x, A7x, A8x, A9x, AAx, ABx, ACx, ADx, AEx, AFx, AGx, AHx, AJx, AKx, ALx, AMx, ANx, APx, AQx, ARx, ASx, ATx, AUx, AVx, AWx, AXx, AYx, AZx, B2x, B3x, B4x, B5x, B6x, B7x, B8x, B9x, BAx, BBx, BCx, BDx, BEx, BFx, BGx, BHx, BJx, BKx, BMx, BNx, BPx, BQx, BRx, BSx, BTx, BUx, BVx, BWx, BXx, BYx, BZx, C2x, C3x, C4x, C5x, C6x, C7x, C8x, C9x, CAx, CBx, CCx, CDx, CEx, CFx, CGx, CHx, CJx, CKx, CLx, CMx, CNx, CPx, CQx, CRx, CSx, CUx, CVx, CWx, CXx, CYx, CZx, D2x, D3x, D4x, D5x, D6x, D7x, D8x, D9x, DAx, DBx, DCx, DDx, DEx, DFx, DGx, DHx, DJx, DKx, DLx, Q2x, Q3x, Q4x, Q5x, Q6x, Q7x, Q8x, Q9x, QAx, QBx, QCx, QDx, QEx, QFx, QGx, QHx, QJx, R2x, R3x, R4x, R5x, R6x, R7x, R8x, R9x, RAx, RBx, RCx, RDx, RFx, RGx, RHx, RJx, RKx, RLx, RMx, RNx, RPx, RQx, RRx, RSx, RTx, RUx, RVx, RWx, RXx • 2873-CTO, 22x, 32x, 33x • 2875-CTO, 22x, 23x, 24x, 25x, 26x, 27x, 28x, 29x, 2Ax, 2Bx, 2Cx, 2Dx, 2Ex, 2Fx, 2Gx, 2Hx, 2Jx, 2Kx, 2Lx, 2Mx, 2Nx, 2Px, 2Qx, 2Rx, 2Sx, 2Tx, 2Ux, 2Vx, 2Wx, 2Xx, 2Yx, 2Zx, 32x, 33x, 35x, 36x, 39x, 3Ax, 3Mx, 3Nx, 3Px, 3Wx, 3Xx, 3Yx, 3Zx, 42x, 43x, 44x, 45x, 46x, 47x, 48x, 49x, 4Ax, 4Bx, 4Cx, 4Dx, 4Ex, 4Fx, 4Gx, 4Hx, 4Jx, 4Kx, 4Lx, 4Nx, 4Px, 4Qx, 4Rx, 4Sx, 4Tx, 4Ux, 4Vx, 4Wx, 4Xx, 4Yx, 52x, 53x, 54x, 55x, 56x, 57x, 58x, 59x, 5Ax, 5Bx, 5Cx, 5Dx, 5Ex, 5Fx, 5Gx, 5Hx, 5Jx, 5Kx, 5Lx, 5Mx, 5Nx, 5Px, 5Qx, 5Rx, 5Sx, R2x, R3x, R4x, R5x, R6x, R7x, R8x, R9x, RAx, RBx, RCx, RDx, RFx, RGx, RHx, RJx • 5072-CTO • 0530-CTO, 22x, 32x, 52x, 53x, 54x, 55x, 56x, 57x, 59x, 5Ax, 5Bx, 5Cx, 5Dx, 5Ex, 5Fx, 5Gx, 5Jx, 5Kx, 5Lx, 5Mx, 5Nx, 5Px, 5Qx, 5Rx, 5Sx, 5Tx, 5Ux, 5Wx, 5Xx, 5Zx, 62x, 63x, 64x, 65x, 66x, 67x, 68x, 69x, 6Ax, 6Bx, 6Cx, 6Dx, 6Ex, 6Fx, 6Gx, 6Hx, 6Jx, 6Kx, 6Lx, 6Mx, 6Nx • 0553-CTO, 22x, 24x, 25x, 33x, 35x, 36x, 42x, 43x, 44x, 53x, 54x, 55x, 56x, 57x, 58x, 59x, 5Ax, 5Bx, 5Cx, 5Dx, 5Ex, 5Fx, 5Gx, 5Hx, 5Jx, 5Kx, 5Lx, 5Mx, 5Nx, 5Px, 5Qx, 5Rx, 5Tx, 5Ux, 5Vx, 5Wx, 5Xx, 5Yx, 5Zx, 62x, 63x, 64x, 65x, 66x, 67x, 68x, 69x, 6Bx, 6Cx, 6Dx, 6Fx, 6Gx, 6Hx, 6Jx, 6Kx, 6Lx, 6Mx, 6Nx, 6Px, 6Qx, 6Rx, 6Sx, 6Tx, 6Ux, 6Vx, 6Wx, 6Xx, 6Yx, 6Zx, 72x, 73x, 74x, 75x, 76x, 77x, 78x, 79x, 7Ax, 7Bx, 7Cx, 7Dx, 7Ex, 7Fx, 7Gx, 7Hx, 7Jx, 7Kx, 7Lx, 7Mx, 7Nx, 7Px, 7Qx, 7Rx, 7Sx, 7Tx, 7Ux, 7Vx, 7Wx, 7Xx, 7Yx, 7Zx, 82x, 83x, 84x, 85x, 86x, 87x, 88x, 89x, 8Ax, 8Bx, 8Cx, 8Dx, 8Ex, R2x, R3x (to be continued)	41W0753	**

Table 40. Parts list—Overall (continued)

No.	FRU (Overall)	FRU no.	CRU ID
12	(continued) DVD-RAM/RW drive • 0585-CTO, 42x, 43x, 44x, 52x, 53x, 54x, 55x, 56x, 5Ax, 5Bx, 5Dx, 5Fx, 5Hx, 5Kx, 5Mx, 5Px, 5Rx, 5Tx, 5Vx, 5Yx, 64x, 65x, 66x, 67x, 68x, 69x, 6Ax, 6Bx, 6Cx, 6Dx, 6Ex, 6Fx, 6Gx, 6Hx, 6Jx, 6Kx, 6Lx, 6Mx, 6Nx, 6Px, 6Qx, 6Rx, 6Sx, 6Tx, 6Ux, 6Xx, 6Yx, 6Zx, 74x, 75x, 76x, 77x • 0591-CTO, 52x, 53x • 4403-CTO, 32x, 33x, 34x, 35x, 36x, 37x, 38x, 39x, 3Bx, 3Cx, 3Dx, 3Fx, 3Gx, 3Hx, 3Kx, 3Lx, 3Mx, 3Px, 3Qx, 3Rx, 3Tx, 3Ux, 3Vx, 3Wx, 3Xx, 3Yx, 3Zx, 42x, 43x, 44x, 45x, 46x, 47x, 48x, 49x, 4Ax, 4Cx, 4Dx, 4Ex, 4Gx, 4Hx, 4Jx, 4Kx, 4Lx, 4Mx, 4Nx, 4Px, 4Rx, 4Sx, 4Tx, 4Ux, 4Vx, 4Wx, 4Xx, 4Yx, 4Zx, 52x, 53x, 54x, 55x, 56x, 57x, 58x, 59x, 5Ax, 5Cx, 5Ex, 5Fx, 5Gx, 5Jx, 5Kx, 5Lx, 5Mx, 5Px, 5Qx, 5Rx, 5Sx, 5Ux, 5Vx, 5Wx, 5Yx, 5Zx, 63x, 64x, 65x, 66x, 67x, 68x, 69x, 6Ax, 6Bx, 6Cx, 6Dx, 6Ex, 6Fx, 6Gx, 6Hx, 6Jx, 6Kx, 6Lx, 6Mx, 6Nx, 6Px, 6Qx, 6Rx, 6Sx, 6Tx, 6Ux, 6Vx, 6Wx, 6Xx, 6Yx, 6Zx, 72x, 73x, 74x, 75x, 76x, 77x • 4404-CTO, 32x, 33x, 34x, 35x, 36x, 37x, 38x, 39x, 3Ax, 3Bx, 3Cx, 3Dx, 3Ex, 3Fx, 3Gx, 3Hx, 3Jx, 3Kx, 3Lx, 3Mx, 3Nx, 3Px, 3Qx, 3Rx, 3Sx, 3Tx, 3Ux, 3Vx, 3Wx, 3Yx, 3Zx, 42x, 43x, 44x, 45x, 47x, 48x, 4Ax, 4Bx, 4Cx, 4Ex, 4Fx, 4Hx, 4Kx, 4Lx, 4Mx, 4Nx, 4Px, 4Qx, 4Rx, 4Sx, 4Tx, 4Ux, 4Vx, 4Wx, 4Xx, 4Yx, 4Zx • 2550-CTO, 42x, 43x, 44x, 52x, 53x, 54x, 55x, 5Ax, 5Bx, 5Dx, 5Fx, 5Hx, 5Kx, 5Mx, 5Px, 5Rx, 5Tx, 5Vx, 5Xx, 5Zx, 62x, 63x, 64x, 65x, 66x, 67x, 68x, 69x, 6Ax, 6Nx, 6Sx, 6Tx, 6Ux • 2597-CTO, 22x, 32x, 52x, 53x, 54x, 55x, 56x, 58x, 59x, 5Ax, 5Bx, 5Cx, 5Dx, 5Ex, 5Fx, 5Gx, 5Hx, 5Jx, 5Kx, 5Lx, 5Mx, 5Nx, 5Px, 5Qx, 5Rx, 5Sx, 5Tx, 5Vx, 5Wx, 5Xx, 5Yx, 5Zx, 62x, 63x, 64x, 65x, 66x, 67x, 68x, 69x, 6Ax, 6Bx, 6Cx, 6Dx, 6Ex, 6Fx, 6Gx, 6Hx, 6Jx, 6Kx, 6Lx, 6Mx, 6Nx, 6Px, 6Qx • 2598-CTO, 22x, 24x, 25x, 33x, 34x, 35x, 42x, 43x, 44x, 52x, 53x, 54x, 55x, 56x, 57x, 58x, 59x, 5Ax, 5Bx, 5Cx, 5Dx, 5Ex, 5Fx, 5Gx, 5Hx, 5Jx, 5Kx, 5Lx, 5Mx, 5Nx, 5Px, 5Qx, 5Rx, 5Sx, 5Tx, 5Vx, 5Wx, 5Xx, 5Yx, 5Zx, 62x, 63x, 64x, 65x, 66x, 67x, 68x, 69x, 6Ax, 6Bx, 6Cx, 6Dx, 6Ex, 6Fx, 6Gx, 6Jx, 6Kx, 6Lx, 6Nx, 6Px, 6Qx, 6Rx, 6Sx, 6Tx, 6Ux, 6Vx, 6Wx, 6Xx, 6Yx, 6Zx, 72x, 74x, 75x, 76x, 77x, 78x, 79x, 7Ax, 7Bx, 7Cx, 7Dx, 7Ex, 7Fx, 7Gx, 7Hx, 7Jx, 7Kx, 7Qx, 7Rx, 7Sx, 7Tx, 7Ux, 7Vx, 7Wx, 7Xx, 7Yx, 7Zx, 82x, 83x, 84x, 85x, R2x, R3x • 2599-CTO, 52x, 53x • 4444-CTO, 32x, 33x, 34x, 35x, 36x, 37x, 38x, 39x, 3Ax, 3Bx, 3Cx, 3Dx, 3Ex, 3Fx, 3Gx, 3Hx, 3Jx, 3Kx, 3Lx, 3Mx, 3Nx, 3Px, 3Qx, 3Rx, 3Sx, 3Tx, 3Ux, 3Vx, 3Wx, 3Yx, 3Zx, 42x, 43x, 44x, 45x, 46x, 47x, 48x, 49x, 4Ax, 4Bx, 4Cx, 4Dx, 4Ex, 4Fx, 4Gx, 4Hx, 4Jx, 4Kx, 4Lx, 4Mx, 4Nx, 4Px, 4Qx, 4Rx, 4Sx, 4Tx, 4Ux, 4Vx, 4Wx, 4Xx, 4Yx, 4Zx, 52x, 53x, 54x, 55x, 56x, 57x, 58x, 59x, 5Ax, 5Bx, 5Cx, 5Dx, 5Ex • 4447-CTO, 32x, 33x, 34x, 35x, 36x, 37x, 38x, 39x, 3Ax, 3Bx, 3Cx, 3Dx, 3Ex, 3Fx, 3Gx, 3Hx, 7Lx, 7Mx, 7Nx, 7Px	41W0753	**

Table 40. Parts list—Overall (continued)

No.	FRU (Overall)	FRU no.	CRU ID
12	DVD-RAM/RW drive • 0616-CTO, 22x, 25x, 26x, 27x, 28x, 29x, 2Cx, 2Dx • 2842-CTO, 22x, 23x, 24x, 25x, 26x, 27x, 28x, 29x, 2Ax, 2Bx, 2Cx, 2Dx, 2Ex, 33x, 34x, 35x, 36x, 37x, 39x, 3Bx, 3Dx, 3Fx, 3Gx, 3Hx, 3Px, 3Qx, 3Rx, 3Sx, 3Tx, 3Ux, 3Vx, 42x, 43x, 44x, 45x, 46x, 47x, 48x, 49x, 4Ax, 4Bx, 4Cx, 4Dx, 4Ex, 4Fx, 4Gx, 4Hx, 4Jx, 4Kx, 4Lx, 4Mx, 4Nx, 4Px, 4Qx, 4Rx, 4Sx, 4Tx, 4Ux, 4Vx, 4Wx, 4Xx, 4Yx, 4Zx, 52x, 53x, 54x, 55x, 56x, 57x, 58x, 59x, 5Ax, 5Bx, 5Cx, 5Dx, 5Ex, 5Fx, 5Gx, 5Hx, 5Jx, 5Kx, 5Lx, 5Mx, 5Nx, 5Px, 5Qx, 5Rx, 5Sx, 5Tx, 5Ux, 5Vx, 5Wx, 5Xx, 5Yx, 5Zx, 62x, 63x, 64x, 65x, 66x, 67x, 68x, 69x, 6Ax, 6Bx, 6Cx, 6Dx, 6Ex, 6Fx, 6Gx, 6Hx, 6Jx, 6Kx, 6Lx, 6Mx, 6Nx, 6Px, 6Qx, 6Rx, 6Sx, 6Tx, 6Ux, 6Vx, 6Wx, 6Xx, 6Yx, 6Zx, 72x, 73x, 74x, 75x, 76x, 77x, 78x, 7Bx, 7Cx, 7Dx, 7Ex, 7Fx, 7Gx, 7Hx, 7Jx, 7Px, 7Qx, 7Rx, 7Sx, 7Tx, 7Ux, 7Vx, 7Wx, 7Xx, 7Yx, 7Zx, 82x, 83x, 84x, 85x, 86x, 87x, 88x, 89x, 8Ax, 8Bx, 8Cx, 8Dx, 8Ex, 8Fx, 8Gx, 8Hx, 8Jx, 8Kx, 8Lx, 8Mx, 8Nx, 8Rx, 8Sx, 8Tx, 8Ux, 8Vx, 8Wx, 8Xx, 8Yx, 8Zx, 92x, 93x, 94x, 95x, 96x, 97x, 98x, 99x, 9Ax, 9Bx, 9Cx, 9Dx, 9Ex, 9Fx, 9Gx, 9Hx, 9Jx, 9Kx, 9Lx, 9Mx, 9Nx, 9Px, 9Qx, 9Rx, 9Sx, 9Tx, 9Ux, 9Vx, 9Wx, 9Xx, 9Yx, 9Zx, A2x, A3x, A4x, A5x, A6x, A7x, A8x, A9x, AAx, ABx, ACx, ADx, AEx, AFx, AGx, AHx, AJx, AKx, ALx, AMx, ANx, APx, AQx, ARx, ASx, ATx, AUx, AVx, AWx, AXx, AYx, AZx, B2x, B3x, B4x, B5x, B6x, B7x, B8x, B9x, BAx, BBx, BCx, BDx, BEx, BFx, BGx, BHx, BJx, BKx, BMx, BNx, BPx, BQx, BRx, BSx, BTx, BUx, BVx, BWx, BXx, BYx, BZx, C2x, C3x, C4x, C5x, C6x, C7x, C8x, C9x, CAx, CBx, CCx, CDx, CEx, CFx, CGx, CHx, CJx, CKx, CLx, CMx, CNx, CPx, CQx, CRx, CSx, CUx, CVx, CWx, CXx, CYx, CZx, D2x, D3x, D4x, D5x, D6x, D7x, D8x, D9x, DAx, DBx, DCx, DDx, DEx, DFx, DGx, DHx, DJx, DKx, DLx, DMx, DNx, DPx, DQx, DRx, DSx, DTx, DUx, DVx, DWx, DXx, DYx, DZx, E2x, E3x, E4x, E5x, E6x, E7x, E8x, E9x, EAx, EBx, ECx, EDx, EEx, EFx, EGx, EHx, EJx, EKx, ELx, EMx, ENx, EPx, EQx, ERx, ESx, ETx, EUx, EVx, EWx, EXx, EYx, EZx, F2x, F3x, F4x, F5x, F6x, F7x, F8x, F9x, FAx, FBx, FCx, FDx, FEx, FFx, FGx, FHx, FJx, FKx, FLx, FMx, FNx, FPx, FQx, FSx, FTx, FUx, FVx, FWx, FXx, FYx, FZx, G2x, G3x, G4x, G5x, G6x, G7x, G8x, G9x, GBx, GCx, GDx, GEx, GFx, GGx, GHx, GJx, GKx, GLx, GMx, GNx, GPx, GQx, GRx, GSx, GTx, GUx, GVx, GWx, GXx, GYx, GZx, H2x, H3x, H4x, H5x, H6x, H7x, H8x, H9x, HAx, HBx, HCx, HDx, HEx, HFx, HGx, HHx, HJx, HKx, HLx, HMx, HNx, HPx, HQx, HRx, HSx, HTx, HUx, HVx, HWx, HXx, HYx, HZx, J2x, J3x, J4x, J5x, J6x, J7x, J8x, J9x, JAx, JBx, JCx, JDx, JEx, JFx, JGx, JHx, JJx, JKx, JLx, JMx, JNx, JPx, JQx, JRx, JSx, JTx, JUx, JVx, JWx, JXx, JYx, JZx, K2x, K3x, K4x, K5x, K6x, K7x, K8x, K9x, KAx, KBx, KCx, KDx, KEx, KFx, KGx, KHx, KJx, KKx, KLx, KMx, KNx, KPx, KQx, KRx, KSx, KTx, KUx, KVx, KWx, KXx, KYx, KZx, L2x, L3x, L4x, L5x, L6x, L7x • 2874-CTO, 22x, 32x, 33x, 34x, 35x, 36x, 37x, 39x, 3Bx, 3Ex, 3Gx, 3Kx, 3Lx, 3Mx, 3Nx, 3Px, 3Qx, 3Rx, 3Sx, 46x, 47x, 48x, 49x, 4Ax, 4Bx, 4Cx, 4Dx, 4Fx, 4Gx, 4Hx, 4Jx, 4Kx, 4Lx, 4Mx, 4Nx, 4Px, 4Qx, 52x, 53x, 54x, 55x, 56x, 57x, 58x, 59x, 5Ax, 5Bx, 5Cx, 5Dx, 5Ex, 5Fx, 5Gx, 5Hx, 5Jx, 5Kx, 5Lx, 5Mx, 5Nx, 5Px, 5Qx, 5Rx, 62x, 63x, 64x, 65x, 66x, 67x, 68x, 69x, 6Ax, 6Bx, 6Cx, 6Dx, 6Ex, 6Fx, 6Gx, 6Hx, 6Jx, 6Kx, 6Lx, 6Mx, 6Nx, 6Px, 6Qx, 6Rx, 6Sx, 6Tx, 6Ux, 6Vx, 6Wx, 6Xx, 6Yx, 6Zx, 72x, 73x, 74x, 75x, 76x, 77x, 78x, 79x, 7Ax, 7Bx, 7Cx, 7Dx, 7Ex, 7Fx, 7Gx, 7Hx, 7Jx, 7Kx, 7Lx, 7Mx, 7Nx, 7Px, 7Qx, 7Rx, 7Sx, 7Tx, 7Ux, 7Vx, 7Wx, 7Xx, 7Yx, 7Zx, 82x, 83x, 84x, 85x, 86x, 87x, 88x, 89x, 8Ax, 8Bx, 8Cx, 8Dx, 8Ex, 8Fx, 8Gx, 8Hx, 8Jx, 8Kx, 8Lx, 8Mx, 8Nx • 2931-CTO, 23x, 24x, 25x, 26x, 27x, 28x, 29x, 2Ax, 2Bx (to be continued)	41W0751	**

Table 40. Parts list—Overall (continued)

No.	FRU (Overall)	FRU no.	CRU ID
12	(continued) DVD-RAM/RW drive • 2847-CTO, 22x, 24x, 25x, 26x, 27x, 28x, 29x, 2Ax, 2Bx, 2Cx, 2Dx, 2Ex, 2Fx, 2Gx, 2Hx, 2Jx, 2Kx, 2Lx, 2Mx, 2Nx, 2Px, 2Qx, 2Rx, 2Sx, 2Tx, 2Ux, 2Vx, 2Wx, 2Xx, 2Yx, 2Zx, 33x, 34x, 35x, 36x, 37x, 38x, 39x, 3Dx, 3Ex, 3Kx, 3Lx, 3Mx, 3Nx, 3Px, 3Qx, 3Vx, 3Wx, 3Xx, 3Yx, 3Zx, 42x, 43x, 44x, 45x, 46x, 47x, 48x, 49x, 4Ax, 4Bx, 4Cx, 4Dx, 4Ex, 4Fx, 4Gx, 4Hx, 4Jx, 4Nx, 4Px, 4Qx, 4Rx, 4Sx, 4Tx, 4Ux, 4Vx, 4Wx, 4Xx, 4Yx, 4Zx, 52x, 53x, 54x, 55x, 56x, 57x, 58x, 59x, 5Ax, 5Bx, 5Cx, 5Dx, 5Ex, 5Fx, 5Gx, 5Hx, 5Jx, 5Kx, 5Lx, 5Mx, 5Nx, 5Px, 5Qx, 5Rx, 5Sx, 5Tx, 5Ux, 5Vx, 5Wx, 5Xx, 5Yx, 5Zx, 62x, 63x, 64x, 65x, 66x, 67x, 68x, 69x, 6Ax, 6Bx, 6Cx, 6Dx, 6Ex, 6Fx, 6Gx, 6Hx, 6Jx, 6Kx, 6Lx, 6Mx, 6Nx, 6Px, 6Qx, 6Rx, 6Sx, 6Tx, 6Ux, 6Vx, 6Wx, 6Xx, 6Yx, 6Zx, 72x, 73x, 74x, 75x, 76x, 77x, 78x, 79x, 7Ax, 7Bx, 7Cx, 7Dx, 7Ex, 7Fx, 7Jx, 7Kx, 7Lx, 7Mx, 7Nx, 7Px, 7Qx, 7Rx, 7Sx, 7Tx, 7Ux, 7Vx, 7Wx, 7Xx, 7Yx, 7Zx, 82x, 83x, 84x, 85x, 86x, 87x, 88x, 89x, 8Ax, 8Bx, 8Cx, 8Dx, 8Ex, 8Fx, 8Gx, 8Hx, 8Jx, 8Kx, 8Lx, 8Mx, 8Nx, 8Px, 8Qx, 8Rx, 8Sx, 8Tx, 8Ux, 8Vx, 8Wx, 8Xx, 8Yx, 8Zx, 92x, 93x, 94x, 95x, 96x, 97x, 98x, 99x, 9Ax, 9Bx, 9Cx, 9Dx, 9Ex, 9Fx, 9Gx, 9Hx, 9Jx, 9Kx, 9Lx, 9Mx, 9Nx, 9Px, 9Qx, 9Rx, 9Sx, 9Tx, 9Ux, 9Vx, 9Wx, 9Xx, 9Yx, 9Zx, A2x, A3x, A4x, A5x, A6x, A7x, A8x, A9x, AAx, ABx, ACx, ADx, AEx, AFx, AGx, AHx, AJx, AKx, ALx, AMx, ANx, APx, AQx, ARx, ASx, ATx, AUx, AVx, AWx, AXx, AYx, AZx, B2x, B3x, B4x, B5x, B6x, B7x, B8x, B9x, BAx, BBx, BCx, BDx, BEx, BFx, BGx, BHx, BJx, BKx, BMx, BNx, BPx, BQx, BRx, BSx, BTx, BUx, BVx, BWx, BXx, BYx, BZx, C2x, C3x, C4x, C5x, C6x, C7x, C8x, C9x, CAx, CBx, CCx, CDx, CEx, CFx, CGx, CHx, CJx, CKx, CLx, CMx, CNx, CPx, CQx, CRx, CSx, CUx, CVx, CWx, CXx, CYx, CZx, D2x, D3x, D4x, D5x, D6x, D7x, D8x, D9x, DAx, DBx, DCx, DDx, DEx, DFx, DGx, DHx, DJx, DKx, DLx, Q2x, Q3x, Q4x, Q5x, Q6x, Q7x, Q8x, Q9x, QAx, QBx, QCx, QDx, QEx, QFx, QGx, QHx, QJx, R2x, R3x, R4x, R5x, R6x, R7x, R8x, R9x, RAx, RBx, RCx, RDx, RFx, RGx, RHx, RJx, RKx, RLx, RMx, RNx, RPx, RQx, RRx, RSx, RTx, RUx, RVx, RWx, RXx • 2873-CTO, 22x, 32x, 33x • 2875-CTO, 22x, 23x, 24x, 25x, 26x, 27x, 28x, 29x, 2Ax, 2Bx, 2Cx, 2Dx, 2Ex, 2Fx, 2Gx, 2Hx, 2Jx, 2Kx, 2Lx, 2Mx, 2Nx, 2Px, 2Qx, 2Rx, 2Sx, 2Tx, 2Ux, 2Vx, 2Wx, 2Xx, 2Yx, 2Zx, 32x, 33x, 35x, 36x, 39x, 3Ax, 3Mx, 3Nx, 3Px, 3Wx, 3Xx, 3Yx, 3Zx, 42x, 43x, 44x, 45x, 46x, 47x, 48x, 49x, 4Ax, 4Bx, 4Cx, 4Dx, 4Ex, 4Fx, 4Gx, 4Hx, 4Jx, 4Kx, 4Lx, 4Nx, 4Px, 4Qx, 4Rx, 4Sx, 4Tx, 4Ux, 4Vx, 4Wx, 4Xx, 4Yx, 52x, 53x, 54x, 55x, 56x, 57x, 58x, 59x, 5Ax, 5Bx, 5Cx, 5Dx, 5Ex, 5Fx, 5Gx, 5Hx, 5Jx, 5Kx, 5Lx, 5Mx, 5Nx, 5Px, 5Qx, 5Rx, 5Sx, R2x, R3x, R4x, R5x, R6x, R7x, R8x, R9x, RAx, RBx, RCx, RDx, RFx, RGx, RHx, RJx • 5072-CTO • 0530-CTO, 22x, 32x, 52x, 53x, 54x, 55x, 56x, 57x, 59x, 5Ax, 5Bx, 5Cx, 5Dx, 5Ex, 5Fx, 5Gx, 5Jx, 5Kx, 5Lx, 5Mx, 5Nx, 5Px, 5Qx, 5Rx, 5Sx, 5Tx, 5Ux, 5Wx, 5Xx, 5Zx, 62x, 63x, 64x, 65x, 66x, 67x, 68x, 69x, 6Ax, 6Bx, 6Cx, 6Dx, 6Ex, 6Fx, 6Gx, 6Hx, 6Jx, 6Kx, 6Lx, 6Mx, 6Nx • 0553-CTO, 22x, 24x, 25x, 33x, 35x, 36x, 42x, 43x, 44x, 53x, 54x, 55x, 56x, 57x, 58x, 59x, 5Ax, 5Bx, 5Cx, 5Dx, 5Ex, 5Fx, 5Gx, 5Hx, 5Jx, 5Kx, 5Lx, 5Mx, 5Nx, 5Px, 5Qx, 5Rx, 5Tx, 5Ux, 5Vx, 5Wx, 5Xx, 5Yx, 5Zx, 62x, 63x, 64x, 65x, 66x, 67x, 68x, 69x, 6Bx, 6Cx, 6Dx, 6Fx, 6Gx, 6Hx, 6Jx, 6Kx, 6Lx, 6Mx, 6Nx, 6Px, 6Qx, 6Rx, 6Sx, 6Tx, 6Ux, 6Vx, 6Wx, 6Xx, 6Yx, 6Zx, 72x, 73x, 74x, 75x, 76x, 77x, 78x, 79x, 7Ax, 7Bx, 7Cx, 7Dx, 7Ex, 7Fx, 7Gx, 7Hx, 7Jx, 7Kx, 7Lx, 7Mx, 7Nx, 7Px, 7Qx, 7Rx, 7Sx, 7Tx, 7Ux, 7Vx, 7Wx, 7Xx, 7Yx, 7Zx, 82x, 83x, 84x, 85x, 86x, 87x, 88x, 89x, 8Ax, 8Bx, 8Cx, 8Dx, 8Ex, R2x, R3x (to be continued)	41W0751	**

Table 40. Parts list—Overall (continued)

No.	FRU (Overall)	FRU no.	CRU ID
12	(continued) DVD-RAM/RW drive • 0585-CTO, 42x, 43x, 44x, 52x, 53x, 54x, 55x, 56x, 5Ax, 5Bx, 5Dx, 5Fx, 5Hx, 5Kx, 5Mx, 5Px, 5Rx, 5Tx, 5Vx, 5Yx, 64x, 65x, 66x, 67x, 68x, 69x, 6Ax, 6Bx, 6Cx, 6Dx, 6Ex, 6Fx, 6Gx, 6Hx, 6Jx, 6Kx, 6Lx, 6Mx, 6Nx, 6Px, 6Qx, 6Rx, 6Sx, 6Tx, 6Ux, 6Xx, 6Yx, 6Zx, 74x, 75x, 76x, 77x • 0591-CTO, 52x, 53x • 4403-CTO, 32x, 33x, 34x, 35x, 36x, 37x, 38x, 39x, 3Bx, 3Cx, 3Dx, 3Fx, 3Gx, 3Hx, 3Kx, 3Lx, 3Mx, 3Px, 3Qx, 3Rx, 3Tx, 3Ux, 3Vx, 3Wx, 3Xx, 3Yx, 3Zx, 42x, 43x, 44x, 45x, 46x, 47x, 48x, 49x, 4Ax, 4Cx, 4Dx, 4Ex, 4Gx, 4Hx, 4Jx, 4Kx, 4Lx, 4Mx, 4Nx, 4Px, 4Rx, 4Sx, 4Tx, 4Ux, 4Vx, 4Wx, 4Xx, 4Yx, 4Zx, 52x, 53x, 54x, 55x, 56x, 57x, 58x, 59x, 5Ax, 5Cx, 5Ex, 5Fx, 5Gx, 5Jx, 5Kx, 5Lx, 5Mx, 5Px, 5Qx, 5Rx, 5Sx, 5Ux, 5Vx, 5Wx, 5Yx, 5Zx, 63x, 64x, 65x, 66x, 67x, 68x, 69x, 6Ax, 6Bx, 6Cx, 6Dx, 6Ex, 6Fx, 6Gx, 6Hx, 6Jx, 6Kx, 6Lx, 6Mx, 6Nx, 6Px, 6Qx, 6Rx, 6Sx, 6Tx, 6Ux, 6Vx, 6Wx, 6Xx, 6Yx, 6Zx, 72x, 73x, 74x, 75x, 76x, 77x • 4404-CTO, 32x, 33x, 34x, 35x, 36x, 37x, 38x, 39x, 3Ax, 3Bx, 3Cx, 3Dx, 3Ex, 3Fx, 3Gx, 3Hx, 3Jx, 3Kx, 3Lx, 3Mx, 3Nx, 3Px, 3Qx, 3Rx, 3Sx, 3Tx, 3Ux, 3Vx, 3Wx, 3Yx, 3Zx, 42x, 43x, 44x, 45x, 47x, 48x, 4Ax, 4Bx, 4Cx, 4Ex, 4Fx, 4Hx, 4Kx, 4Lx, 4Mx, 4Nx, 4Px, 4Qx, 4Rx, 4Sx, 4Tx, 4Ux, 4Vx, 4Wx, 4Xx, 4Yx, 4Zx • 2550-CTO, 42x, 43x, 44x, 52x, 53x, 54x, 55x, 5Ax, 5Bx, 5Dx, 5Fx, 5Hx, 5Kx, 5Mx, 5Px, 5Rx, 5Tx, 5Vx, 5Xx, 5Zx, 62x, 63x, 64x, 65x, 66x, 67x, 68x, 69x, 6Ax, 6Nx, 6Sx, 6Tx, 6Ux • 2597-CTO, 22x, 32x, 52x, 53x, 54x, 55x, 56x, 58x, 59x, 5Ax, 5Bx, 5Cx, 5Dx, 5Ex, 5Fx, 5Gx, 5Hx, 5Jx, 5Kx, 5Lx, 5Mx, 5Nx, 5Px, 5Qx, 5Rx, 5Sx, 5Tx, 5Vx, 5Wx, 5Xx, 5Yx, 5Zx, 62x, 63x, 64x, 65x, 66x, 67x, 68x, 69x, 6Ax, 6Bx, 6Cx, 6Dx, 6Ex, 6Fx, 6Gx, 6Hx, 6Jx, 6Kx, 6Lx, 6Mx, 6Nx, 6Px, 6Qx • 2598-CTO, 22x, 24x, 25x, 33x, 34x, 35x, 42x, 43x, 44x, 52x, 53x, 54x, 55x, 56x, 57x, 58x, 59x, 5Ax, 5Bx, 5Cx, 5Dx, 5Ex, 5Fx, 5Gx, 5Hx, 5Jx, 5Kx, 5Lx, 5Mx, 5Nx, 5Px, 5Qx, 5Rx, 5Sx, 5Tx, 5Vx, 5Wx, 5Xx, 5Yx, 5Zx, 62x, 63x, 64x, 65x, 66x, 67x, 68x, 69x, 6Ax, 6Bx, 6Cx, 6Dx, 6Ex, 6Fx, 6Gx, 6Jx, 6Kx, 6Lx, 6Nx, 6Px, 6Qx, 6Rx, 6Sx, 6Tx, 6Ux, 6Vx, 6Wx, 6Xx, 6Yx, 6Zx, 72x, 74x, 75x, 76x, 77x, 78x, 79x, 7Ax, 7Bx, 7Cx, 7Dx, 7Ex, 7Fx, 7Gx, 7Hx, 7Jx, 7Kx, 7Qx, 7Rx, 7Sx, 7Tx, 7Ux, 7Vx, 7Wx, 7Xx, 7Yx, 7Zx, 82x, 83x, 84x, 85x, R2x, R3x • 2599-CTO, 52x, 53x • 4444-CTO, 32x, 33x, 34x, 35x, 36x, 37x, 38x, 39x, 3Ax, 3Bx, 3Cx, 3Dx, 3Ex, 3Fx, 3Gx, 3Hx, 3Jx, 3Kx, 3Lx, 3Mx, 3Nx, 3Px, 3Qx, 3Rx, 3Sx, 3Tx, 3Ux, 3Vx, 3Wx, 3Yx, 3Zx, 42x, 43x, 44x, 45x, 46x, 47x, 48x, 49x, 4Ax, 4Bx, 4Cx, 4Dx, 4Ex, 4Fx, 4Gx, 4Hx, 4Jx, 4Kx, 4Lx, 4Mx, 4Nx, 4Px, 4Qx, 4Rx, 4Sx, 4Tx, 4Ux, 4Vx, 4Wx, 4Xx, 4Yx, 4Zx, 52x, 53x, 54x, 55x, 56x, 57x, 58x, 59x, 5Ax, 5Bx, 5Cx, 5Dx, 5Ex • 4447-CTO, 32x, 33x, 34x, 35x, 36x, 37x, 38x, 39x, 3Ax, 3Bx, 3Cx, 3Dx, 3Ex, 3Fx, 3Gx, 3Hx, 7Lx, 7Mx, 7Nx, 7Px	41W0751	**
12	Blu-ray Disc drive • 2842-CTO • 2847-CTO • 2873-CTO • 2874-CTO, 23x • 2875-CTO • 2931-CTO, 22x	41W0749	**

Table 40. Parts list—Overall (continued)

No.	FRU (Overall)	FRU no.	CRU ID
12	Travel cover • 0616-CTO • 2842-CTO • 2847-CTO • 2873-CTO • 2874-CTO • 2875-CTO • 2931-CTO • 5072-CTO • 0530-CTO • 0553-CTO • 0585-CTO, 57x • 0591-CTO • 4403-CTO • 4404-CTO • 2550-CTO, 57x • 2597-CTO • 2598-CTO • 2599-CTO • 4444-CTO • 4447-CTO	60Y4101	**
12	Travel cover • 0530-CTO • 0553-CTO • 0585-CTO, 57x • 0591-CTO • 4403-CTO • 4404-CTO • 2550-CTO, 57x • 2597-CTO • 2598-CTO • 2599-CTO • 4444-CTO • 4447-CTO	04W0359	**
13	SIM slot cover with screw	60Y4187	*
14	Wireless LAN card slot cover with screw for SL410, L410, and L412	60Y4185	*
14	Wireless LAN card slot cover with screw for SL510, L510, and L512	60Y4191	*
15	Thermal cover with screw for SL410 and L410	60Y4183	*
15	Thermal cover with screw for L412	60Y5021	*
15	Thermal cover with screw for SL510 and L510	60Y4189	*
15	Thermal cover with screw for L512	75Y4677	*
15	Thermal cover with screw for for SL410 and L410, Discrete 512 MB	04W1600	*

Table 40. Parts list—Overall (continued)

No.	FRU (Overall)	FRU no.	CRU ID
16	SATA hard disk drive, 160 GB, 5,400 rpm • 2842-CTO, 34x, 3Fx, 3Gx, 3Px, 3Rx, 46x, 5Gx, ALx, GRx, H6x • 2847-CTO, 24x, 25x, 26x, 27x, 2Bx, 2Cx, 2Dx, 2Ex, 2Jx, 2Kx, 2Wx, 33x, 37x, 38x, 39x, 3Lx, 4Jx, 52x, 53x, 7Fx, 8Qx, 8Tx, 9Kx, 9Mx, APx, BBx, QDx, QGx • 2873-CTO • 2874-CTO, 22x, 32x, 35x, 3Lx, 3Mx, 47x, 4Cx, 6Tx, 6Xx, 79x • 2875-CTO, 2Gx, 2Yx, 32x, 33x, 35x, 39x, 3Ax, 3Mx, 3Nx, 3Px, 3Yx, 44x, 46x, 4Fx, 4Gx, 4Hx, 4Tx, 54x, 55x, 57x, 5Px, 5Qx, 5Rx, 5Sx • 2931-CTO • 0530-CTO, 22x • 0553-CTO • 0585-CTO • 0591-CTO • 4403-CTO • 4404-CTO • 2550-CTO • 2597-CTO, 22x • 2598-CTO • 2599-CTO • 4444-CTO • 4447-CTO	41W0775	**
16	SATA hard disk drive, 160 GB, 5,400 rpm • 2842-CTO, 34x, 3Fx, 3Gx, 3Px, 3Rx, 46x, 5Gx, ALx, GRx, H6x • 2847-CTO, 24x, 25x, 26x, 27x, 2Bx, 2Cx, 2Dx, 2Ex, 2Jx, 2Kx, 2Wx, 33x, 37x, 38x, 39x, 3Lx, 4Jx, 52x, 53x, 7Fx, 8Qx, 8Tx, 9Kx, 9Mx, APx, BBx, QDx, QGx • 2873-CTO • 2874-CTO, 22x, 32x, 35x, 3Lx, 3Mx, 47x, 4Cx, 6Tx, 6Xx, 79x • 2875-CTO, 2Gx, 2Yx, 32x, 33x, 35x, 39x, 3Ax, 3Mx, 3Nx, 3Px, 3Yx, 44x, 46x, 4Fx, 4Gx, 4Hx, 4Tx, 54x, 55x, 57x, 5Px, 5Qx, 5Rx, 5Sx • 2931-CTO • 0530-CTO, 22x • 0553-CTO • 0585-CTO • 0591-CTO • 4403-CTO • 4404-CTO • 2550-CTO • 2597-CTO, 22x • 2598-CTO • 2599-CTO • 4444-CTO • 4447-CTO	41W0767	**

Table 40. Parts list—Overall (continued)

No.	FRU (Overall)	FRU no.	CRU ID
16	SATA hard disk drive, 160 GB, 5,400 rpm • 2842-CTO, 34x, 3Fx, 3Gx, 3Px, 3Rx, 46x, 5Gx, ALx, GRx, H6x • 2847-CTO, 24x, 25x, 26x, 27x, 2Bx, 2Cx, 2Dx, 2Ex, 2Jx, 2Kx, 2Wx, 33x, 37x, 38x, 39x, 3Lx, 4Jx, 52x, 53x, 7Fx, 8Qx, 8Tx, 9Kx, 9Mx, APx, BBx, QDx, QGx • 2873-CTO • 2874-CTO, 22x, 32x, 35x, 3Lx, 3Mx, 47x, 4Cx, 6Tx, 6Xx, 79x • 2875-CTO, 2Gx, 2Yx, 32x, 33x, 35x, 39x, 3Ax, 3Mx, 3Nx, 3Px, 3Yx, 44x, 46x, 4Fx, 4Gx, 4Hx, 4Tx, 54x, 55x, 57x, 5Px, 5Qx, 5Rx, 5Sx • 2931-CTO • 0530-CTO, 22x • 0553-CTO • 0585-CTO • 0591-CTO • 4403-CTO • 4404-CTO • 2550-CTO • 2597-CTO, 22x • 2598-CTO • 2599-CTO • 4444-CTO • 4447-CTO	41W0783	**
16	SATA hard disk drive, 160 GB, 5,400 rpm • 2842-CTO, 34x, 3Fx, 3Gx, 3Px, 3Rx, 46x, 5Gx, ALx, GRx, H6x • 2847-CTO, 24x, 25x, 26x, 27x, 2Bx, 2Cx, 2Dx, 2Ex, 2Jx, 2Kx, 2Wx, 33x, 37x, 38x, 39x, 3Lx, 4Jx, 52x, 53x, 7Fx, 8Qx, 8Tx, 9Kx, 9Mx, APx, BBx, QDx, QGx • 2873-CTO • 2874-CTO, 22x, 32x, 35x, 3Lx, 3Mx, 47x, 4Cx, 6Tx, 6Xx, 79x • 2875-CTO, 2Gx, 2Yx, 32x, 33x, 35x, 39x, 3Ax, 3Mx, 3Nx, 3Px, 3Yx, 44x, 46x, 4Fx, 4Gx, 4Hx, 4Tx, 54x, 55x, 57x, 5Px, 5Qx, 5Rx, 5Sx • 2931-CTO	75Y5021	**
16	SATA hard disk drive, 160 GB, 5,400 rpm • 2842-CTO, 34x, 3Fx, 3Gx, 3Px, 3Rx, 46x, 5Gx, ALx, GRx, H6x • 2847-CTO, 24x, 25x, 26x, 27x, 2Bx, 2Cx, 2Dx, 2Ex, 2Jx, 2Kx, 2Wx, 33x, 37x, 38x, 39x, 3Lx, 4Jx, 52x, 53x, 7Fx, 8Qx, 8Tx, 9Kx, 9Mx, APx, BBx, QDx, QGx • 2873-CTO • 2874-CTO, 22x, 32x, 35x, 3Lx, 3Mx, 47x, 4Cx, 6Tx, 6Xx, 79x • 2875-CTO, 2Gx, 2Yx, 32x, 33x, 35x, 39x, 3Ax, 3Mx, 3Nx, 3Px, 3Yx, 44x, 46x, 4Fx, 4Gx, 4Hx, 4Tx, 54x, 55x, 57x, 5Px, 5Qx, 5Rx, 5Sx • 2931-CTO • 0530-CTO, 22x • 0553-CTO • 0585-CTO • 0591-CTO • 4403-CTO • 4404-CTO • 2550-CTO • 2597-CTO, 22x • 2598-CTO • 2599-CTO • 4444-CTO • 4447-CTO	75Y5031	**

Table 40. Parts list—Overall (continued)

No.	FRU (Overall)	FRU no.	CRU ID
16	SATA hard disk drive, 160 GB, 5,400 rpm • 2842-CTO, 34x, 3Fx, 3Gx, 3Px, 3Rx, 46x, 5Gx, ALx, GRx, H6x • 2847-CTO, 24x, 25x, 26x, 27x, 2Bx, 2Cx, 2Dx, 2Ex, 2Jx, 2Kx, 2Wx, 33x, 37x, 38x, 39x, 3Lx, 4Jx, 52x, 53x, 7Fx, 8Qx, 8Tx, 9Kx, 9Mx, APx, BBx, QDx, QGx • 2873-CTO • 2874-CTO, 22x, 32x, 35x, 3Lx, 3Mx, 47x, 4Cx, 6Tx, 6Xx, 79x • 2875-CTO, 2Gx, 2Yx, 32x, 33x, 35x, 39x, 3Ax, 3Mx, 3Nx, 3Px, 3Yx, 44x, 46x, 4Fx, 4Gx, 4Hx, 4Tx, 54x, 55x, 57x, 5Px, 5Qx, 5Rx, 5Sx • 2931-CTO • 0530-CTO, 22x • 0553-CTO • 0585-CTO • 0591-CTO • 4403-CTO • 4404-CTO • 2550-CTO • 2597-CTO, 22x • 2598-CTO • 2599-CTO • 4444-CTO • 4447-CTO	75Y5041	**
16	SATA hard disk drive, 160 GB, 5,400 rpm, 7 mm height • 0530-CTO, 22x • 0553-CTO • 0585-CTO • 0591-CTO • 4403-CTO • 4404-CTO • 2550-CTO • 2597-CTO, 22x • 2598-CTO • 2599-CTO • 4444-CTO • 4447-CTO	75Y5131	**
16	SATA hard disk drive, 160 GB, 5,400 rpm • 2842-CTO, 24x, 2Bx, 4Sx, 4Tx, 4Ux, 4Wx, 55x, ABx, GSx, H7x • 2847-CTO, 25x, 29x, 2Ax, 2Bx, 2Xx, 2Yx, 39x, 3Dx, 56x, 57x, 58x, 59x, 5Dx, 5Ex, 5Fx, 5Gx, 5Lx, 5Mx, 6Dx, 83x, 86x, 8Xx, 92x, 9Hx, ANx, AQx, R8x • 2873-CTO • 2874-CTO, 32x, 3Bx, 3Mx, 46x, 49x, 4Ax, 4Dx, 6Ux, 6Yx, 7Ax • 2875-CTO, 24x, 26x, 27x, 2Ax, 2Cx, 2Kx, 2Lx, 2Mx, 2Nx, 2Px, 2Qx, 2Tx, 2Ux, 2Vx, 4Dx, 4Sx, 5Bx, R9x, RAx, RCx • 2931-CTO	41W0791	**

Table 40. Parts list—Overall (continued)

No.	FRU (Overall)	FRU no.	CRU ID
16	SATA hard disk drive, 250 GB, 5,400 rpm • 0616-CTO • 2842-CTO, 23x, 33x, 3Bx, 44x, 48x, 4Cx, 4Ex, 4Px, 4Ux, 4Yx, 4Zx, 52x, 53x, 57x, 5Cx, 5Dx, 5Ex, 5Hx, 5Kx, 66x, 67x, 6Cx, 6Dx, 6Jx, 6Px, 6Qx, 6Vx, 6Wx, 73x, 7Cx, 7Ex, 7Fx, 7Hx, 7Qx, 7Rx, 7Sx, 7Tx, 7Ux, 7Vx, 7Wx, 7Xx, 7Yx, 87x, 88x, 89x, 8Ex, 8Fx, 8Gx, 8Mx, 8Nx, 8Rx, 8Sx, 8Ux, 8Xx, 92x, 94x, 97x, 9Ax, 9Cx, 9Fx, 9Jx, 9Lx, 9Px, 9Sx, 9Ux, 9Xx, A2x, A4x, A7x, AMx, ANx, ARx, ASx, AVx, AWx, AZx, BCx, BDx, BEx, BFx, BRx, BSx, BUx, BVx, BWx, BYx, CDx, CEx, CFx, CMx, CNx, CPx, DNx, EAx, EBx, ECx, EFx, EJx, EMx, ENx, ERx, EUx, F7x, GFx, GKx, GWx, GXx, H7x, H8x, HEx, HSx, HUx, HXx, J5x, J6x, J7x, J8x, J9x, JAx, JLx, JMx, JQx, JRx, K3x, K5x, K6x, K7x, K8x, KDx, KEx, KFx, KGx, KHx, KNx, KSx, KWx, L2x, L4x • 2847-CTO, 28x, 2Fx, 2Lx, 2Mx, 2Nx, 2Sx, 2Tx, 2Xx, 2Zx, 3Kx, 3Qx, 3Xx, 3Yx, 3Zx, 42x, 43x, 44x, 45x, 4Ax, 4Bx, 4Ex, 4Hx, 4Nx, 4Qx, 4Sx, 4Tx, 4Vx, 4Xx, 4Yx, 4Zx, 54x, 55x, 56x, 57x, 58x, 59x, 5Hx, 5Jx, 5Nx, 5Rx, 5Ux, 5Vx, 5Zx, 64x, 68x, 69x, 6Ax, 6Bx, 6Gx, 6Hx, 6Lx, 6Mx, 72x, 73x, 7Bx, 7Cx, 7Dx, 7Ex, 7Jx, 7Kx, 7Lx, 7Mx, 7Nx, 7Px, 7Qx, 7Tx, 7Ux, 7Vx, 89x, 8Ax, 8Bx, 8Cx, 8Dx, 8Kx, 8Mx, 8Nx, 8Px, 8Rx, 8Sx, 8Ux, 8Wx, 8Yx, 9Hx, 9Jx, 9Lx, 9Nx, 9Ux, ATx, AUx, AVx, AWx, AZx, B4x, B5x, B6x, B7x, B9x, BQx, BUx, BVx, C3x, C5x, CAx, CCx, CQx, CSx, CZx, D4x, D9x, DAx, DDx, DHx, DKx, Q5x, Q6x, Q7x, Q8x, Q9x, QAx, QEx, QHx, R2x, R3x, R4x, R6x, R9x, RCx, RFx, RJx, RMx, RPx, RSx • 2873-CTO, 22x, 32x • 2874-CTO, 33x, 34x, 37x, 39x, 3Bx, 3Ex, 3Gx, 3Px, 3Rx, 46x, 48x, 49x, 4Bx, 4Fx, 4Kx, 4Lx, 4Mx, 4Px, 52x, 54x, 57x, 5Ax, 5Cx, 5Fx, 5Jx, 5Lx, 5Px, 62x, 63x, 6Cx, 6Dx, 6Ex, 6Hx, 6Jx, 6Px, 6Qx, 6Rx, 6Ux, 6Wx, 6Yx, 6Zx, 73x, 77x, 78x, 7Ax, 7Gx, 7Hx, 7Lx, 7Rx, 7Sx, 7Tx, 7Ux, 7Vx, 7Wx, 7Zx, 87x, 88x, 89x, 8Ax, 8Bx, 8Cx, 8Dx, 8Fx, 8Gx, 8Hx, 8Kx, 8Lx, 8Mx • 2875-CTO, 22x, 23x, 24x, 25x, 26x, 29x, 2Ax, 2Dx, 2Ex, 2Fx, 2Hx, 2Jx, 2Kx, 2Mx, 2Nx, 2Px, 2Qx, 2Rx, 2Sx, 2Tx, 2Vx, 2Wx, 2Zx, 3Wx, 3Xx, 3Zx, 42x, 43x, 45x, 47x, 49x, 4Cx, 4Dx, 4Ex, 4Jx, 4Kx, 4Nx, 4Qx, 4Ux, 4Yx, 52x, 53x, 56x, 5Bx, 5Dx, 5Hx, 5Jx, 5Kx, 5Lx, 5Mx, 5Nx, R2x, R4x, R7x, R9x, RCx, RGx • 2931-CTO, 23x, 24x, 25x • 5072-CTO (to be continued)	41W0777	**
16	(continued) SATA hard disk drive, 250 GB, 5,400 rpm • 0530-CTO, 53x, 54x, 5Dx, 5Fx, 5Gx, 5Kx, 5Zx • 0553-CTO, 24x, 54x, 55x, 5Ax, 5Bx, 5Cx, 5Dx, 5Fx, 5Gx, 5Kx, 5Lx, 5Nx, 5Tx, 5Ux, 5Vx, 5Wx, 5Xx, 5Yx, 79x, 7Ex, 7Hx, 82x, 86x • 0585-CTO, 52x, 53x, 54x, 57x, 58x, 59x, 5Ax, 64x, 67x, 6Nx • 0591-CTO, 52x • 4403-CTO, 35x, 42x, 44x, 45x, 4Ax, 4Nx, 4Rx, 4Yx, 4Zx, 52x, 6Dx, 6Ex, 6Mx, 6Nx • 4404-CTO, 4Qx • 2550-CTO, 42x, 52x, 53x, 57x, 58x, 59x, 5Ax, 5Zx • 2597-CTO, 52x, 53x, 5Cx, 5Ex, 5Fx, 5Vx, 6Jx • 2598-CTO, 24x, 42x, 54x, 56x, 57x, 5Ax, 5Bx, 5Cx, 5Dx, 5Ex, 5Mx, 5Nx, 5Vx, 5Wx, 5Xx, 5Yx, 5Zx, 62x, 6Qx, 6Rx, 72x, 79x, 7Ex, 7Fx, 7Sx, 7Wx • 2599-CTO, 52x • 4444-CTO, 35x, 3Dx, 3Fx, 3Gx, 3Vx, 3Zx, 46x, 47x, 48x, 5Ax • 4447-CTO, 7Lx, 7Mx, 7Nx, 7Px	41W0777	**

Table 40. Parts list—Overall (continued)

No.	FRU (Overall)	FRU no.	CRU ID
16	SATA hard disk drive, 250 GB, 5,400 rpm • 0616-CTO • 2842-CTO, 23x, 33x, 3Bx, 44x, 48x, 4Cx, 4Ex, 4Px, 4Ux, 4Yx, 4Zx, 52x, 53x, 57x, 5Cx, 5Dx, 5Ex, 5Hx, 5Kx, 66x, 67x, 6Cx, 6Dx, 6Jx, 6Px, 6Qx, 6Vx, 6Wx, 73x, 7Cx, 7Ex, 7Fx, 7Hx, 7Qx, 7Rx, 7Sx, 7Tx, 7Ux, 7Vx, 7Wx, 7Xx, 7Yx, 87x, 88x, 89x, 8Ex, 8Fx, 8Gx, 8Mx, 8Nx, 8Rx, 8Sx, 8Ux, 8Xx, 92x, 94x, 97x, 9Ax, 9Cx, 9Fx, 9Jx, 9Lx, 9Px, 9Sx, 9Ux, 9Xx, A2x, A4x, A7x, AMx, ANx, ARx, ASx, AVx, AWx, AZx, BCx, BDx, BEx, BFx, BRx, BSx, BUx, BVx, BWx, BYx, CDx, CEx, CFx, CMx, CNx, CPx, DNx, EAx, EBx, ECx, EFx, EJx, EMx, ENx, ERx, EUx, F7x, GFx, GKx, GWx, GXx, H7x, H8x, HEx, HSx, HUx, HXx, J5x, J6x, J7x, J8x, J9x, JAx, JLx, JMx, JQx, JRx, K3x, K5x, K6x, K7x, K8x, KDx, KEx, KFx, KGx, KHx, KNx, KSx, KWx, L2x, L4x • 2847-CTO, 28x, 2Fx, 2Lx, 2Mx, 2Nx, 2Sx, 2Tx, 2Xx, 2Zx, 3Kx, 3Qx, 3Xx, 3Yx, 3Zx, 42x, 43x, 44x, 45x, 4Ax, 4Bx, 4Ex, 4Hx, 4Nx, 4Qx, 4Sx, 4Tx, 4Vx, 4Xx, 4Yx, 4Zx, 54x, 55x, 56x, 57x, 58x, 59x, 5Hx, 5Jx, 5Nx, 5Rx, 5Ux, 5Vx, 5Zx, 64x, 68x, 69x, 6Ax, 6Bx, 6Gx, 6Hx, 6Lx, 6Mx, 72x, 73x, 7Bx, 7Cx, 7Dx, 7Ex, 7Jx, 7Kx, 7Lx, 7Mx, 7Nx, 7Px, 7Qx, 7Tx, 7Ux, 7Vx, 89x, 8Ax, 8Bx, 8Cx, 8Dx, 8Kx, 8Mx, 8Nx, 8Px, 8Rx, 8Sx, 8Ux, 8Wx, 8Yx, 9Hx, 9Jx, 9Lx, 9Nx, 9Ux, ATx, AUx, AVx, AWx, AZx, B4x, B5x, B6x, B7x, B9x, BQx, BUx, BVx, C3x, C5x, CAx, CCx, CQx, CSx, CZx, D4x, D9x, DAx, DDx, DHx, DKx, Q5x, Q6x, Q7x, Q8x, Q9x, QAx, QEx, QHx, R2x, R3x, R4x, R6x, R9x, RCx, RFx, RJx, RMx, RPx, RSx • 2873-CTO, 22x, 32x • 2874-CTO, 33x, 34x, 37x, 39x, 3Bx, 3Ex, 3Gx, 3Px, 3Rx, 46x, 48x, 49x, 4Bx, 4Fx, 4Kx, 4Lx, 4Mx, 4Px, 52x, 54x, 57x, 5Ax, 5Cx, 5Fx, 5Jx, 5Lx, 5Px, 62x, 63x, 6Cx, 6Dx, 6Ex, 6Hx, 6Jx, 6Px, 6Qx, 6Rx, 6Ux, 6Wx, 6Yx, 6Zx, 73x, 77x, 78x, 7Ax, 7Gx, 7Hx, 7Lx, 7Rx, 7Sx, 7Tx, 7Ux, 7Vx, 7Wx, 7Zx, 87x, 88x, 89x, 8Ax, 8Bx, 8Cx, 8Dx, 8Fx, 8Gx, 8Hx, 8Kx, 8Lx, 8Mx • 2875-CTO, 22x, 23x, 24x, 25x, 26x, 29x, 2Ax, 2Dx, 2Ex, 2Fx, 2Hx, 2Jx, 2Kx, 2Mx, 2Nx, 2Px, 2Qx, 2Rx, 2Sx, 2Tx, 2Vx, 2Wx, 2Zx, 3Wx, 3Xx, 3Zx, 42x, 43x, 45x, 47x, 49x, 4Cx, 4Dx, 4Ex, 4Jx, 4Kx, 4Nx, 4Qx, 4Ux, 4Yx, 52x, 53x, 56x, 5Bx, 5Dx, 5Hx, 5Jx, 5Kx, 5Lx, 5Mx, 5Nx, R2x, R4x, R7x, R9x, RCx, RGx • 2931-CTO, 23x, 24x, 25x • 5072-CTO (to be continued)	41W0769	**
16	(continued) SATA hard disk drive, 250 GB, 5,400 rpm • 0530-CTO, 53x, 54x, 5Dx, 5Fx, 5Gx, 5Kx, 5Zx • 0553-CTO, 24x, 54x, 55x, 5Ax, 5Bx, 5Cx, 5Dx, 5Fx, 5Gx, 5Kx, 5Lx, 5Nx, 5Tx, 5Ux, 5Vx, 5Wx, 5Xx, 5Yx, 79x, 7Ex, 7Hx, 82x, 86x • 0585-CTO, 52x, 53x, 54x, 57x, 58x, 59x, 5Ax, 64x, 67x, 6Nx • 0591-CTO, 52x • 4403-CTO, 35x, 42x, 44x, 45x, 4Ax, 4Nx, 4Rx, 4Yx, 4Zx, 52x, 6Dx, 6Ex, 6Mx, 6Nx • 4404-CTO, 4Qx • 2550-CTO, 42x, 52x, 53x, 57x, 58x, 59x, 5Ax, 5Zx • 2597-CTO, 52x, 53x, 5Cx, 5Ex, 5Fx, 5Vx, 6Jx • 2598-CTO, 24x, 42x, 54x, 56x, 57x, 5Ax, 5Bx, 5Cx, 5Dx, 5Ex, 5Mx, 5Nx, 5Vx, 5Wx, 5Xx, 5Yx, 5Zx, 62x, 6Qx, 6Rx, 72x, 79x, 7Ex, 7Fx, 7Sx, 7Wx • 2599-CTO, 52x • 4444-CTO, 35x, 3Dx, 3Fx, 3Gx, 3Vx, 3Zx, 46x, 47x, 48x, 5Ax • 4447-CTO, 7Lx, 7Mx, 7Nx, 7Px	41W0769	**

Table 40. Parts list—Overall (continued)

No.	FRU (Overall)	FRU no.	CRU ID
16	SATA hard disk drive, 250 GB, 5,400 rpm • 0616-CTO • 2842-CTO, 23x, 33x, 3Bx, 44x, 48x, 4Cx, 4Ex, 4Px, 4Ux, 4Yx, 4Zx, 52x, 53x, 57x, 5Cx, 5Dx, 5Ex, 5Hx, 5Kx, 66x, 67x, 6Cx, 6Dx, 6Jx, 6Px, 6Qx, 6Vx, 6Wx, 73x, 7Cx, 7Ex, 7Fx, 7Hx, 7Qx, 7Rx, 7Sx, 7Tx, 7Ux, 7Vx, 7Wx, 7Xx, 7Yx, 87x, 88x, 89x, 8Ex, 8Fx, 8Gx, 8Mx, 8Nx, 8Rx, 8Sx, 8Ux, 8Xx, 92x, 94x, 97x, 9Ax, 9Cx, 9Fx, 9Jx, 9Lx, 9Px, 9Sx, 9Ux, 9Xx, A2x, A4x, A7x, AMx, ANx, ARx, ASx, AVx, AWx, AZx, BCx, BDx, BEx, BFx, BRx, BSx, BUx, BVx, BWx, BYx, CDx, CEx, CFx, CMx, CNx, CPx, DNx, EAx, EBx, ECx, EFx, EJx, EMx, ENx, ERx, EUx, F7x, GFx, GKx, GWx, GXx, H7x, H8x, HEx, HSx, HUx, HXx, J5x, J6x, J7x, J8x, J9x, JAx, JLx, JMx, JQx, JRx, K3x, K5x, K6x, K7x, K8x, KDx, KEx, KFx, KGx, KHx, KNx, KSx, KWx, L2x, L4x • 2847-CTO, 28x, 2Fx, 2Lx, 2Mx, 2Nx, 2Sx, 2Tx, 2Xx, 2Zx, 3Kx, 3Qx, 3Xx, 3Yx, 3Zx, 42x, 43x, 44x, 45x, 4Ax, 4Bx, 4Ex, 4Hx, 4Nx, 4Qx, 4Sx, 4Tx, 4Vx, 4Xx, 4Yx, 4Zx, 54x, 55x, 56x, 57x, 58x, 59x, 5Hx, 5Jx, 5Nx, 5Rx, 5Ux, 5Vx, 5Zx, 64x, 68x, 69x, 6Ax, 6Bx, 6Gx, 6Hx, 6Lx, 6Mx, 72x, 73x, 7Bx, 7Cx, 7Dx, 7Ex, 7Jx, 7Kx, 7Lx, 7Mx, 7Nx, 7Px, 7Qx, 7Tx, 7Ux, 7Vx, 89x, 8Ax, 8Bx, 8Cx, 8Dx, 8Kx, 8Mx, 8Nx, 8Px, 8Rx, 8Sx, 8Ux, 8Wx, 8Yx, 9Hx, 9Jx, 9Lx, 9Nx, 9Ux, ATx, AUx, AVx, AWx, AZx, B4x, B5x, B6x, B7x, B9x, BQx, BUx, BVx, C3x, C5x, CAx, CCx, CQx, CSx, CZx, D4x, D9x, DAx, DDx, DHx, DKx, Q5x, Q6x, Q7x, Q8x, Q9x, QAx, QEx, QHx, R2x, R3x, R4x, R6x, R9x, RCx, RFx, RJx, RMx, RPx, RSx • 2873-CTO, 22x, 32x • 2874-CTO, 33x, 34x, 37x, 39x, 3Bx, 3Ex, 3Gx, 3Px, 3Rx, 46x, 48x, 49x, 4Bx, 4Fx, 4Kx, 4Lx, 4Mx, 4Px, 52x, 54x, 57x, 5Ax, 5Cx, 5Fx, 5Jx, 5Lx, 5Px, 62x, 63x, 6Cx, 6Dx, 6Ex, 6Hx, 6Jx, 6Px, 6Qx, 6Rx, 6Ux, 6Wx, 6Yx, 6Zx, 73x, 77x, 78x, 7Ax, 7Gx, 7Hx, 7Lx, 7Rx, 7Sx, 7Tx, 7Ux, 7Vx, 7Wx, 7Zx, 87x, 88x, 89x, 8Ax, 8Bx, 8Cx, 8Dx, 8Fx, 8Gx, 8Hx, 8Kx, 8Lx, 8Mx • 2875-CTO, 22x, 23x, 24x, 25x, 26x, 29x, 2Ax, 2Dx, 2Ex, 2Fx, 2Hx, 2Jx, 2Kx, 2Mx, 2Nx, 2Px, 2Qx, 2Rx, 2Sx, 2Tx, 2Vx, 2Wx, 2Zx, 3Wx, 3Xx, 3Zx, 42x, 43x, 45x, 47x, 49x, 4Cx, 4Dx, 4Ex, 4Jx, 4Kx, 4Nx, 4Qx, 4Ux, 4Yx, 52x, 53x, 56x, 5Bx, 5Dx, 5Hx, 5Jx, 5Kx, 5Lx, 5Mx, 5Nx, R2x, R4x, R7x, R9x, RCx, RGx • 2931-CTO, 23x, 24x, 25x • 5072-CTO (to be continued)	41W0785	**
16	(continued) SATA hard disk drive, 250 GB, 5,400 rpm • 0530-CTO, 53x, 54x, 5Dx, 5Fx, 5Gx, 5Kx, 5Zx • 0553-CTO, 24x, 54x, 55x, 5Ax, 5Bx, 5Cx, 5Dx, 5Fx, 5Gx, 5Kx, 5Lx, 5Nx, 5Tx, 5Ux, 5Vx, 5Wx, 5Xx, 5Yx, 79x, 7Ex, 7Hx, 82x, 86x • 0585-CTO, 52x, 53x, 54x, 57x, 58x, 59x, 5Ax, 64x, 67x, 6Nx • 0591-CTO, 52x • 4403-CTO, 35x, 42x, 44x, 45x, 4Ax, 4Nx, 4Rx, 4Yx, 4Zx, 52x, 6Dx, 6Ex, 6Mx, 6Nx • 4404-CTO, 4Qx • 2550-CTO, 42x, 52x, 53x, 57x, 58x, 59x, 5Ax, 5Zx • 2597-CTO, 52x, 53x, 5Cx, 5Ex, 5Fx, 5Vx, 6Jx • 2598-CTO, 24x, 42x, 54x, 56x, 57x, 5Ax, 5Bx, 5Cx, 5Dx, 5Ex, 5Mx, 5Nx, 5Vx, 5Wx, 5Xx, 5Yx, 5Zx, 62x, 6Qx, 6Rx, 72x, 79x, 7Ex, 7Fx, 7Sx, 7Wx • 2599-CTO, 52x • 4444-CTO, 35x, 3Dx, 3Fx, 3Gx, 3Vx, 3Zx, 46x, 47x, 48x, 5Ax • 4447-CTO, 7Lx, 7Mx, 7Nx, 7Px	41W0785	**

Table 40. Parts list—Overall (continued)

No.	FRU (Overall)	FRU no.	CRU ID
16	SATA hard disk drive, 250 GB, 5,400 rpm • 0616-CTO • 2842-CTO, 23x, 33x, 3Bx, 44x, 48x, 4Cx, 4Ex, 4Px, 4Ux, 4Yx, 4Zx, 52x, 53x, 57x, 5Cx, 5Dx, 5Ex, 5Hx, 5Kx, 66x, 67x, 6Cx, 6Dx, 6Jx, 6Px, 6Qx, 6Vx, 6Wx, 73x, 7Cx, 7Ex, 7Fx, 7Hx, 7Qx, 7Rx, 7Sx, 7Tx, 7Ux, 7Vx, 7Wx, 7Xx, 7Yx, 87x, 88x, 89x, 8Ex, 8Fx, 8Gx, 8Mx, 8Nx, 8Rx, 8Sx, 8Ux, 8Xx, 92x, 94x, 97x, 9Ax, 9Cx, 9Fx, 9Jx, 9Lx, 9Px, 9Sx, 9Ux, 9Xx, A2x, A4x, A7x, AMx, ANx, ARx, ASx, AVx, AWx, AZx, BCx, BDx, BEx, BFx, BRx, BSx, BUx, BVx, BWx, BYx, CDx, CEx, CFx, CMx, CNx, CPx, DNx, EAx, EBx, ECx, EFx, EJx, EMx, ENx, ERx, EUx, F7x, GFx, GKx, GWx, GXx, H7x, H8x, HEx, HSx, HUx, HXx, J5x, J6x, J7x, J8x, J9x, JAx, JLx, JMx, JQx, JRx, K3x, K5x, K6x, K7x, K8x, KDx, KEx, KFx, KGx, KHx, KNx, KSx, KWx, L2x, L4x • 2847-CTO, 28x, 2Fx, 2Lx, 2Mx, 2Nx, 2Sx, 2Tx, 2Xx, 2Zx, 3Kx, 3Qx, 3Xx, 3Yx, 3Zx, 42x, 43x, 44x, 45x, 4Ax, 4Bx, 4Ex, 4Hx, 4Nx, 4Qx, 4Sx, 4Tx, 4Vx, 4Xx, 4Yx, 4Zx, 54x, 55x, 56x, 57x, 58x, 59x, 5Hx, 5Jx, 5Nx, 5Rx, 5Ux, 5Vx, 5Zx, 64x, 68x, 69x, 6Ax, 6Bx, 6Gx, 6Hx, 6Lx, 6Mx, 72x, 73x, 7Bx, 7Cx, 7Dx, 7Ex, 7Jx, 7Kx, 7Lx, 7Mx, 7Nx, 7Px, 7Qx, 7Tx, 7Ux, 7Vx, 89x, 8Ax, 8Bx, 8Cx, 8Dx, 8Kx, 8Mx, 8Nx, 8Px, 8Rx, 8Sx, 8Ux, 8Wx, 8Yx, 9Hx, 9Jx, 9Lx, 9Nx, 9Ux, ATx, AUx, AVx, AWx, AZx, B4x, B5x, B6x, B7x, B9x, BQx, BUx, BVx, C3x, C5x, CAx, CCx, CQx, CSx, CZx, D4x, D9x, DAx, DDx, DHx, DKx, Q5x, Q6x, Q7x, Q8x, Q9x, QAx, QEx, QHx, R2x, R3x, R4x, R6x, R9x, RCx, RFx, RJx, RMx, RPx, RSx • 2873-CTO, 22x, 32x • 2874-CTO, 33x, 34x, 37x, 39x, 3Bx, 3Ex, 3Gx, 3Px, 3Rx, 46x, 48x, 49x, 4Bx, 4Fx, 4Kx, 4Lx, 4Mx, 4Px, 52x, 54x, 57x, 5Ax, 5Cx, 5Fx, 5Jx, 5Lx, 5Px, 62x, 63x, 6Cx, 6Dx, 6Ex, 6Hx, 6Jx, 6Px, 6Qx, 6Rx, 6Ux, 6Wx, 6Yx, 6Zx, 73x, 77x, 78x, 7Ax, 7Gx, 7Hx, 7Lx, 7Rx, 7Sx, 7Tx, 7Ux, 7Vx, 7Wx, 7Zx, 87x, 88x, 89x, 8Ax, 8Bx, 8Cx, 8Dx, 8Fx, 8Gx, 8Hx, 8Kx, 8Lx, 8Mx • 2875-CTO, 22x, 23x, 24x, 25x, 26x, 29x, 2Ax, 2Dx, 2Ex, 2Fx, 2Hx, 2Jx, 2Kx, 2Mx, 2Nx, 2Px, 2Qx, 2Rx, 2Sx, 2Tx, 2Vx, 2Wx, 2Zx, 3Wx, 3Xx, 3Zx, 42x, 43x, 45x, 47x, 49x, 4Cx, 4Dx, 4Ex, 4Jx, 4Kx, 4Nx, 4Qx, 4Ux, 4Yx, 52x, 53x, 56x, 5Bx, 5Dx, 5Hx, 5Jx, 5Kx, 5Lx, 5Mx, 5Nx, R2x, R4x, R7x, R9x, RCx, RGx • 2931-CTO, 23x, 24x, 25x • 5072-CTO	75Y5023	**

Table 40. Parts list—Overall (continued)

No.	FRU (Overall)	FRU no.	CRU ID
16	SATA hard disk drive, 250 GB, 5,400 rpm • 0616-CTO • 2842-CTO, 23x, 33x, 3Bx, 44x, 48x, 4Cx, 4Ex, 4Px, 4Ux, 4Yx, 4Zx, 52x, 53x, 57x, 5Cx, 5Dx, 5Ex, 5Hx, 5Kx, 66x, 67x, 6Cx, 6Dx, 6Jx, 6Px, 6Qx, 6Vx, 6Wx, 73x, 7Cx, 7Ex, 7Fx, 7Hx, 7Qx, 7Rx, 7Sx, 7Tx, 7Ux, 7Vx, 7Wx, 7Xx, 7Yx, 87x, 88x, 89x, 8Ex, 8Fx, 8Gx, 8Mx, 8Nx, 8Rx, 8Sx, 8Ux, 8Xx, 92x, 94x, 97x, 9Ax, 9Cx, 9Fx, 9Jx, 9Lx, 9Px, 9Sx, 9Ux, 9Xx, A2x, A4x, A7x, AMx, ANx, ARx, ASx, AVx, AWx, AZx, BCx, BDx, BEx, BFx, BRx, BSx, BUx, BVx, BWx, BYx, CDx, CEx, CFx, CMx, CNx, CPx, DNx, EAx, EBx, ECx, EFx, EJx, EMx, ENx, ERx, EUx, F7x, GFx, GKx, GWx, GXx, H7x, H8x, HEx, HSx, HUx, HXx, J5x, J6x, J7x, J8x, J9x, JAx, JLx, JMx, JQx, JRx, K3x, K5x, K6x, K7x, K8x, KDx, KEx, KFx, KGx, KHx, KNx, KSx, KWx, L2x, L4x • 2847-CTO, 28x, 2Fx, 2Lx, 2Mx, 2Nx, 2Sx, 2Tx, 2Xx, 2Zx, 3Kx, 3Qx, 3Xx, 3Yx, 3Zx, 42x, 43x, 44x, 45x, 4Ax, 4Bx, 4Ex, 4Hx, 4Nx, 4Qx, 4Sx, 4Tx, 4Vx, 4Xx, 4Yx, 4Zx, 54x, 55x, 56x, 57x, 58x, 59x, 5Hx, 5Jx, 5Nx, 5Rx, 5Ux, 5Vx, 5Zx, 64x, 68x, 69x, 6Ax, 6Bx, 6Gx, 6Hx, 6Lx, 6Mx, 72x, 73x, 7Bx, 7Cx, 7Dx, 7Ex, 7Jx, 7Kx, 7Lx, 7Mx, 7Nx, 7Px, 7Qx, 7Tx, 7Ux, 7Vx, 89x, 8Ax, 8Bx, 8Cx, 8Dx, 8Kx, 8Mx, 8Nx, 8Px, 8Rx, 8Sx, 8Ux, 8Wx, 8Yx, 9Hx, 9Jx, 9Lx, 9Nx, 9Ux, ATx, AUx, AVx, AWx, AZx, B4x, B5x, B6x, B7x, B9x, BQx, BUx, BVx, C3x, C5x, CAx, CCx, CQx, CSx, CZx, D4x, D9x, DAx, DDx, DHx, DKx, Q5x, Q6x, Q7x, Q8x, Q9x, QAx, QEx, QHx, R2x, R3x, R4x, R6x, R9x, RCx, RFx, RJx, RMx, RPx, RSx • 2873-CTO, 22x, 32x • 2874-CTO, 33x, 34x, 37x, 39x, 3Bx, 3Ex, 3Gx, 3Px, 3Rx, 46x, 48x, 49x, 4Bx, 4Fx, 4Kx, 4Lx, 4Mx, 4Px, 52x, 54x, 57x, 5Ax, 5Cx, 5Fx, 5Jx, 5Lx, 5Px, 62x, 63x, 6Cx, 6Dx, 6Ex, 6Hx, 6Jx, 6Px, 6Qx, 6Rx, 6Ux, 6Wx, 6Yx, 6Zx, 73x, 77x, 78x, 7Ax, 7Gx, 7Hx, 7Lx, 7Rx, 7Sx, 7Tx, 7Ux, 7Vx, 7Wx, 7Zx, 87x, 88x, 89x, 8Ax, 8Bx, 8Cx, 8Dx, 8Fx, 8Gx, 8Hx, 8Kx, 8Lx, 8Mx • 2875-CTO, 22x, 23x, 24x, 25x, 26x, 29x, 2Ax, 2Dx, 2Ex, 2Fx, 2Hx, 2Jx, 2Kx, 2Mx, 2Nx, 2Px, 2Qx, 2Rx, 2Sx, 2Tx, 2Vx, 2Wx, 2Zx, 3Wx, 3Xx, 3Zx, 42x, 43x, 45x, 47x, 49x, 4Cx, 4Dx, 4Ex, 4Jx, 4Kx, 4Nx, 4Qx, 4Ux, 4Yx, 52x, 53x, 56x, 5Bx, 5Dx, 5Hx, 5Jx, 5Kx, 5Lx, 5Mx, 5Nx, R2x, R4x, R7x, R9x, RCx, RGx • 2931-CTO, 23x, 24x, 25x • 5072-CTO (to be continued)	75Y5033	**
16	(continued) SATA hard disk drive, 250 GB, 5,400 rpm • 0530-CTO, 53x, 54x, 5Dx, 5Fx, 5Gx, 5Kx, 5Zx • 0553-CTO, 24x, 54x, 55x, 5Ax, 5Bx, 5Cx, 5Dx, 5Fx, 5Gx, 5Kx, 5Lx, 5Nx, 5Tx, 5Ux, 5Vx, 5Wx, 5Xx, 5Yx, 79x, 7Ex, 7Hx, 82x, 86x • 0585-CTO, 52x, 53x, 54x, 57x, 58x, 59x, 5Ax, 64x, 67x, 6Nx • 0591-CTO, 52x • 4403-CTO, 35x, 42x, 44x, 45x, 4Ax, 4Nx, 4Rx, 4Yx, 4Zx, 52x, 6Dx, 6Ex, 6Mx, 6Nx • 4404-CTO, 4Qx • 2550-CTO, 42x, 52x, 53x, 57x, 58x, 59x, 5Ax, 5Zx • 2597-CTO, 52x, 53x, 5Cx, 5Ex, 5Fx, 5Vx, 6Jx • 2598-CTO, 24x, 42x, 54x, 56x, 57x, 5Ax, 5Bx, 5Cx, 5Dx, 5Ex, 5Mx, 5Nx, 5Vx, 5Wx, 5Xx, 5Yx, 5Zx, 62x, 6Qx, 6Rx, 72x, 79x, 7Ex, 7Fx, 7Sx, 7Wx • 2599-CTO, 52x • 4444-CTO, 35x, 3Dx, 3Fx, 3Gx, 3Vx, 3Zx, 46x, 47x, 48x, 5Ax • 4447-CTO, 7Lx, 7Mx, 7Nx, 7Px	75Y5033	**

Table 40. Parts list—Overall (continued)

No.	FRU (Overall)	FRU no.	CRU ID
16	SATA hard disk drive, 250 GB, 5,400 rpm • 0616-CTO • 2842-CTO, 23x, 33x, 3Bx, 44x, 48x, 4Cx, 4Ex, 4Px, 4Ux, 4Yx, 4Zx, 52x, 53x, 57x, 5Cx, 5Dx, 5Ex, 5Hx, 5Kx, 66x, 67x, 6Cx, 6Dx, 6Jx, 6Px, 6Qx, 6Vx, 6Wx, 73x, 7Cx, 7Ex, 7Fx, 7Hx, 7Qx, 7Rx, 7Sx, 7Tx, 7Ux, 7Vx, 7Wx, 7Xx, 7Yx, 87x, 88x, 89x, 8Ex, 8Fx, 8Gx, 8Mx, 8Nx, 8Rx, 8Sx, 8Ux, 8Xx, 92x, 94x, 97x, 9Ax, 9Cx, 9Fx, 9Jx, 9Lx, 9Px, 9Sx, 9Ux, 9Xx, A2x, A4x, A7x, AMx, ANx, ARx, ASx, AVx, AWx, AZx, BCx, BDx, BEx, BFx, BRx, BSx, BUx, BVx, BWx, BYx, CDx, CEx, CFx, CMx, CNx, CPx, DNx, EAx, EBx, ECx, EFx, EJx, EMx, ENx, ERx, EUx, F7x, GFx, GKx, GWx, GXx, H7x, H8x, HEx, HSx, HUx, HXx, J5x, J6x, J7x, J8x, J9x, JAx, JLx, JMx, JQx, JRx, K3x, K5x, K6x, K7x, K8x, KDx, KEx, KFx, KGx, KHx, KNx, KSx, KWx, L2x, L4x • 2847-CTO, 28x, 2Fx, 2Lx, 2Mx, 2Nx, 2Sx, 2Tx, 2Xx, 2Zx, 3Kx, 3Qx, 3Xx, 3Yx, 3Zx, 42x, 43x, 44x, 45x, 4Ax, 4Bx, 4Ex, 4Hx, 4Nx, 4Qx, 4Sx, 4Tx, 4Vx, 4Xx, 4Yx, 4Zx, 54x, 55x, 56x, 57x, 58x, 59x, 5Hx, 5Jx, 5Nx, 5Rx, 5Ux, 5Vx, 5Zx, 64x, 68x, 69x, 6Ax, 6Bx, 6Gx, 6Hx, 6Lx, 6Mx, 72x, 73x, 7Bx, 7Cx, 7Dx, 7Ex, 7Jx, 7Kx, 7Lx, 7Mx, 7Nx, 7Px, 7Qx, 7Tx, 7Ux, 7Vx, 89x, 8Ax, 8Bx, 8Cx, 8Dx, 8Kx, 8Mx, 8Nx, 8Px, 8Rx, 8Sx, 8Ux, 8Wx, 8Yx, 9Hx, 9Jx, 9Lx, 9Nx, 9Ux, ATx, AUx, AVx, AWx, AZx, B4x, B5x, B6x, B7x, B9x, BQx, BUx, BVx, C3x, C5x, CAx, CCx, CQx, CSx, CZx, D4x, D9x, DAx, DDx, DHx, DKx, Q5x, Q6x, Q7x, Q8x, Q9x, QAx, QEx, QHx, R2x, R3x, R4x, R6x, R9x, RCx, RFx, RJx, RMx, RPx, RSx • 2873-CTO, 22x, 32x • 2874-CTO, 33x, 34x, 37x, 39x, 3Bx, 3Ex, 3Gx, 3Px, 3Rx, 46x, 48x, 49x, 4Bx, 4Fx, 4Kx, 4Lx, 4Mx, 4Px, 52x, 54x, 57x, 5Ax, 5Cx, 5Fx, 5Jx, 5Lx, 5Px, 62x, 63x, 6Cx, 6Dx, 6Ex, 6Hx, 6Jx, 6Px, 6Qx, 6Rx, 6Ux, 6Wx, 6Yx, 6Zx, 73x, 77x, 78x, 7Ax, 7Gx, 7Hx, 7Lx, 7Rx, 7Sx, 7Tx, 7Ux, 7Vx, 7Wx, 7Zx, 87x, 88x, 89x, 8Ax, 8Bx, 8Cx, 8Dx, 8Fx, 8Gx, 8Hx, 8Kx, 8Lx, 8Mx • 2875-CTO, 22x, 23x, 24x, 25x, 26x, 29x, 2Ax, 2Dx, 2Ex, 2Fx, 2Hx, 2Jx, 2Kx, 2Mx, 2Nx, 2Px, 2Qx, 2Rx, 2Sx, 2Tx, 2Vx, 2Wx, 2Zx, 3Wx, 3Xx, 3Zx, 42x, 43x, 45x, 47x, 49x, 4Cx, 4Dx, 4Ex, 4Jx, 4Kx, 4Nx, 4Qx, 4Ux, 4Yx, 52x, 53x, 56x, 5Bx, 5Dx, 5Hx, 5Jx, 5Kx, 5Lx, 5Mx, 5Nx, R2x, R4x, R7x, R9x, RCx, RGx • 2931-CTO, 23x, 24x, 25x • 5072-CTO (to be continued)	75Y5043	**
16	(continued) SATA hard disk drive, 250 GB, 5,400 rpm • 0530-CTO, 53x, 54x, 5Dx, 5Fx, 5Gx, 5Kx, 5Zx • 0553-CTO, 24x, 54x, 55x, 5Ax, 5Bx, 5Cx, 5Dx, 5Fx, 5Gx, 5Kx, 5Lx, 5Nx, 5Tx, 5Ux, 5Vx, 5Wx, 5Xx, 5Yx, 79x, 7Ex, 7Hx, 82x, 86x • 0585-CTO, 52x, 53x, 54x, 57x, 58x, 59x, 5Ax, 64x, 67x, 6Nx • 0591-CTO, 52x • 4403-CTO, 35x, 42x, 44x, 45x, 4Ax, 4Nx, 4Rx, 4Yx, 4Zx, 52x, 6Dx, 6Ex, 6Mx, 6Nx • 4404-CTO, 4Qx • 2550-CTO, 42x, 52x, 53x, 57x, 58x, 59x, 5Ax, 5Zx • 2597-CTO, 52x, 53x, 5Cx, 5Ex, 5Fx, 5Vx, 6Jx • 2598-CTO, 24x, 42x, 54x, 56x, 57x, 5Ax, 5Bx, 5Cx, 5Dx, 5Ex, 5Mx, 5Nx, 5Vx, 5Wx, 5Xx, 5Yx, 5Zx, 62x, 6Qx, 6Rx, 72x, 79x, 7Ex, 7Fx, 7Sx, 7Wx • 2599-CTO, 52x • 4444-CTO, 35x, 3Dx, 3Fx, 3Gx, 3Vx, 3Zx, 46x, 47x, 48x, 5Ax • 4447-CTO, 7Lx, 7Mx, 7Nx, 7Px	75Y5043	**

Table 40. Parts list—Overall (continued)

No.	FRU (Overall)	FRU no.	CRU ID
16	SATA hard disk drive, 250 GB, 5,400 rpm, 7 mm height • 0616-CTO • 2842-CTO • 2874-CTO • 2931-CTO • 0530-CTO, 53x, 54x, 5Dx, 5Fx, 5Gx, 5Kx, 5Zx • 0553-CTO, 24x, 54x, 55x, 5Ax, 5Bx, 5Cx, 5Dx, 5Fx, 5Gx, 5Kx, 5Lx, 5Nx, 5Tx, 5Ux, 5Vx, 5Wx, 5Xx, 5Yx, 79x, 7Ex, 7Hx, 82x, 86x • 0585-CTO, 52x, 53x, 54x, 57x, 58x, 59x, 5Ax, 64x, 67x, 6Nx • 0591-CTO, 52x • 4403-CTO, 35x, 42x, 44x, 45x, 4Ax, 4Nx, 4Rx, 4Yx, 4Zx, 52x, 6Dx, 6Ex, 6Mx, 6Nx • 4404-CTO, 4Qx • 2550-CTO, 42x, 52x, 53x, 57x, 58x, 59x, 5Ax, 5Zx • 2597-CTO, 52x, 53x, 5Cx, 5Ex, 5Fx, 5Vx, 6Jx • 2598-CTO, 24x, 42x, 54x, 56x, 57x, 5Ax, 5Bx, 5Cx, 5Dx, 5Ex, 5Mx, 5Nx, 5Vx, 5Wx, 5Xx, 5Yx, 5Zx, 62x, 6Qx, 6Rx, 72x, 79x, 7Ex, 7Fx, 7Sx, 7Wx • 2599-CTO, 52x • 4444-CTO, 35x, 3Dx, 3Fx, 3Gx, 3Vx, 3Zx, 46x, 47x, 48x, 5Ax • 4447-CTO, 7Lx, 7Mx, 7Nx, 7Px	75Y5133	**
16	SATA hard disk drive, 250 GB, 5,400 rpm, 7 mm height • 0616-CTO • 2842-CTO • 2874-CTO • 2931-CTO	75Y5145	**

Table 40. Parts list—Overall (continued)

No.	FRU (Overall)	FRU no.	CRU ID
16	SATA hard disk drive, 320 GB, 5,400 rpm • 0616-CTO, 22x, 25x, 26x, 27x, 28x, 2Cx, 2Dx • 2842-CTO, 22x, 24x, 25x, 26x, 27x, 28x, 29x, 2Ax, 2Bx, 2Cx, 2Dx, 2Ex, 35x, 36x, 37x, 39x, 3Dx, 3Hx, 3Qx, 3Sx, 3Tx, 3Ux, 3Vx, 42x, 45x, 47x, 49x, 4Ax, 4Bx, 4Dx, 4Fx, 4Hx, 4Jx, 4Kx, 4Lx, 4Mx, 4Qx, 4Rx, 4Sx, 4Tx, 4Vx, 4Wx, 55x, 58x, 59x, 5Ax, 5Fx, 5Jx, 5Lx, 5Nx, 5Px, 5Qx, 5Rx, 5Ux, 5Vx, 5Wx, 5Xx, 5Yx, 5Zx, 62x, 63x, 64x, 68x, 69x, 6Ex, 6Fx, 6Kx, 6Rx, 6Sx, 6Xx, 6Yx, 74x, 7Bx, 7Dx, 7Gx, 7Jx, 7Px, 7Zx, 82x, 83x, 84x, 85x, 8Ax, 8Bx, 8Hx, 8Jx, 8Tx, 8Vx, 8Yx, 93x, 95x, 98x, 9Bx, 9Dx, 9Gx, 9Kx, 9Mx, 9Qx, 9Tx, 9Vx, 9Yx, A3x, A5x, A8x, AGx, AHx, AJx, AKx, APx, AQx, ATx, AUx, AXx, AYx, B2x, B3x, B4x, B5x, B7x, B8x, B9x, BAx, BBx, BGx, BHx, BKx, BNx, BPx, BQx, BTx, BXx, BZx, C2x, C3x, C4x, C5x, C6x, CCx, CGx, CHx, CJx, CKx, CLx, CQx, CRx, CSx, CUx, CVx, CWx, CXx, CYx, CZx, D2x, D3x, D4x, D5x, D6x, D7x, D8x, D9x, DAx, DBx, DCx, DEx, DGx, DHx, DJx, DKx, DLx, DMx, DPx, DQx, DRx, DSx, DVx, DWx, E2x, E3x, E4x, E5x, E6x, E7x, E8x, E9x, EDx, EGx, EKx, EPx, ESx, EVx, EZx, F2x, F5x, FAx, FCx, FDx, FEx, FFx, FGx, FHx, FMx, FNx, FPx, FQx, FSx, FTx, FUx, FVx, G2x, G3x, G4x, G5x, G6x, G7x, G8x, G9x, GBx, GDx, GEx, GGx, GHx, GJx, GQx, GSx, GTx, GUx, GVx, H9x, HAx, HBx, HCx, HDx, HJx, HRx, HTx, HVx, HWx, JBx, JCx, JDx, JFx, JHx, JJx, JKx, JNx, JPx, JSx, JTx, JUx, JVx, JWx, JXx, JYx, JZx, K2x, K9x, KAx, KBx, KJx, KKx, KLx, KPx, KRx, KTx, KVx, KYx, KZx, L3x, L5x, L6x, L7x • 2847-CTO, 22x, 29x, 2Ax, 2Gx, 2Hx, 2Px, 2Qx, 2Rx, 2Ux, 2Vx, 2Yx, 34x, 35x, 3Dx, 3Ex, 3Mx, 3Nx, 3Px, 3Vx, 3Wx, 46x, 47x, 48x, 49x, 4Cx, 4Fx, 4Gx, 4Px, 4Rx, 4Ux, 4Wx, 5Ax, 5Bx, 5Cx, 5Dx, 5Ex, 5Fx, 5Gx, 5Kx, 5Lx, 5Px, 5Sx, 5Wx, 5Xx, 62x, 65x, 6Cx, 6Dx, 6Ex, 6Fx, 6Jx, 6Kx, 6Nx, 6Px, 6Rx, 6Sx, 6Tx, 6Ux, 6Vx, 6Wx, 6Xx, 6Yx, 6Zx, 74x, 75x, 76x, 77x, 78x, 7Ax, 7Rx, 7Wx, 7Xx, 7Yx, 7Zx, 82x, 83x, 84x, 85x, 86x, 87x, 88x, 8Ex, 8Fx, 8Hx, 8Jx, 8Lx, 8Vx, 8Xx, 8Zx, 92x, 93x, 94x, 95x, 96x, 97x, 98x, 99x, 9Ax, 9Bx, 9Cx, 9Dx, 9Ex, 9Fx, 9Gx, 9Px, 9Qx, A5x, A6x, A8x, A9x, AAx, ACx, ADx, AEx, AFx, AQx, ARx, ASx, AXx, AYx, B2x, B3x, B8x, BAx, BCx, BDx, BEx, BFx, BGx, BHx, BJx, BKx, BMx, BNx, BRx, BSx, BTx, BWx, BXx, BYx, C4x, C6x, C7x, C8x, CBx, CDx, CGx, CJx, CLx, CMx, CNx, CPx, CRx, CUx, CVx, CWx, CXx, CYx, D3x, D5x, D6x, D7x, D8x, DBx, DCx, DEx, DFx, DGx, DLx, Q2x, Q3x, Q4x, QBx, QCx, QFx, QJx, R5x, R7x, RAx, RDx, RGx, RKx, RNx, RQx, RTx • 2873-CTO • 2874-CTO, 36x, 3Kx, 3Nx, 3Qx, 3Sx, 4Ax, 4Dx, 4Gx, 4Hx, 4Jx, 4Nx, 4Qx, 53x, 55x, 58x, 5Bx, 5Dx, 5Gx, 5Kx, 5Mx, 5Qx, 64x, 65x, 66x, 67x, 69x, 6Ax, 6Fx, 6Gx, 6Kx, 6Lx, 6Mx, 6Nx, 6Sx, 6Vx, 72x, 74x, 75x, 76x, 7Ex, 7Fx, 7Jx, 7Mx, 7Px, 7Qx, 7Xx, 82x, 83x, 8Ex, 8Jx, 8Nx • 2875-CTO, 27x, 28x, 2Bx, 2Cx, 2Lx, 2Ux, 2Xx, 36x, 48x, 4Lx, 4Px, 4Vx, 4Wx, 58x, 59x, 5Cx, 5Ex, 5Fx, R3x, R5x, R8x, RAx, RDx, RHx • 2931-CTO, 22x, 27x, 28x, 29x, 2Ax, 2Bx • 5072-CTO, 22x, 25x, 26x, 27x, 28x, 2Cx, 2Dx (to be continued)	41W0779	**

Table 40. Parts list—Overall (continued)

No.	FRU (Overall)	FRU no.	CRU ID
16	(continued) SATA hard disk drive, 320 GB, 5,400 rpm • 0530-CTO, 55x, 56x, 57x, 5Cx, 5Ex, 5Jx, 5Mx, 5Vx, 5Wx, 6Ax, 6Bx, 6Cx, 6Dx • 0553-CTO, 5Hx, 5Jx, 5Mx, 5Px, 5Rx, 6Bx, 6Fx, 6Gx, 6Hx, 6Jx, 6Kx, 6Lx, 6Mx, 6Nx, 75x, 78x, 7Dx, 7Gx, 7Jx, 7Lx, 7Mx, 7Nx, 7Px, 7Qx, 87x, 88x, 8Ex • 0585-CTO, 6Jx, 6Kx, 6Lx, 6Mx, 6Px, 6Qx, 6Rx, 6Sx, 6Tx, 6Ux, 75x • 0591-CTO • 4403-CTO, 3Ax, 3Zx, 43x, 49x, 4Kx, 4Lx, 4Mx, 4Sx, 4Tx, 4Xx, 59x, 5Ax, 5Bx, 5Dx, 5Hx, 5Nx, 67x, 6Fx, 6Gx, 6Jx, 6Kx, 6Px, 6Qx, 6Rx, 72x, 73x • 4404-CTO, 3Xx, 46x, 4Rx, 4Sx, 4Tx • 2550-CTO, 63x, 64x, 65x, 66x, 67x, 68x, 69x, 6Ax • 2597-CTO, 54x, 55x, 56x, 5Bx, 5Dx, 5Rx, 5Sx, 5Tx, 5Wx, 65x, 66x, 67x, 68x, 69x, 6Ex, 6Fx, 6Gx, 6Hx, 6Kx, 6Lx, 6Nx • 2598-CTO, 59x, 5Fx, 5Gx, 63x, 64x, 65x, 66x, 6Gx, 6Px, 74x, 7Gx, 7Hx, 7Jx, 7Kx, 7Xx, 7Yx, 7Zx • 2599-CTO • 4444-CTO, 3Cx, 3Ex, 3Lx, 3Wx, 3Yx, 42x, 45x, 4Nx, 4Px, 4Qx, 4Wx, 4Xx, 57x, 58x, 59x • 4447-CTO	41W0779	**

Table 40. Parts list—Overall (continued)

No.	FRU (Overall)	FRU no.	CRU ID
16	SATA hard disk drive, 320 GB, 5,400 rpm • 0616-CTO, 22x, 25x, 26x, 27x, 28x, 2Cx, 2Dx • 2842-CTO, 22x, 24x, 25x, 26x, 27x, 28x, 29x, 2Ax, 2Bx, 2Cx, 2Dx, 2Ex, 35x, 36x, 37x, 39x, 3Dx, 3Hx, 3Qx, 3Sx, 3Tx, 3Ux, 3Vx, 42x, 45x, 47x, 49x, 4Ax, 4Bx, 4Dx, 4Fx, 4Hx, 4Jx, 4Kx, 4Lx, 4Mx, 4Qx, 4Rx, 4Sx, 4Tx, 4Vx, 4Wx, 55x, 58x, 59x, 5Ax, 5Fx, 5Jx, 5Lx, 5Nx, 5Px, 5Qx, 5Rx, 5Ux, 5Vx, 5Wx, 5Xx, 5Yx, 5Zx, 62x, 63x, 64x, 68x, 69x, 6Ex, 6Fx, 6Kx, 6Rx, 6Sx, 6Xx, 6Yx, 74x, 7Bx, 7Dx, 7Gx, 7Jx, 7Px, 7Zx, 82x, 83x, 84x, 85x, 8Ax, 8Bx, 8Hx, 8Jx, 8Tx, 8Vx, 8Yx, 93x, 95x, 98x, 9Bx, 9Dx, 9Gx, 9Kx, 9Mx, 9Qx, 9Tx, 9Vx, 9Yx, A3x, A5x, A8x, AGx, AHx, AJx, AKx, APx, AQx, ATx, AUx, AXx, AYx, B2x, B3x, B4x, B5x, B7x, B8x, B9x, BAx, BBx, BGx, BHx, BKx, BNx, BPx, BQx, BTx, BXx, BZx, C2x, C3x, C4x, C5x, C6x, CCx, CGx, CHx, CJx, CKx, CLx, CQx, CRx, CSx, CUx, CVx, CWx, CXx, CYx, CZx, D2x, D3x, D4x, D5x, D6x, D7x, D8x, D9x, DAx, DBx, DCx, DEx, DGx, DHx, DJx, DKx, DLx, DMx, DPx, DQx, DRx, DSx, DVx, DWx, E2x, E3x, E4x, E5x, E6x, E7x, E8x, E9x, EDx, EGx, EKx, EPx, ESx, EVx, EZx, F2x, F5x, FAx, FCx, FDx, FEx, FFx, FGx, FHx, FMx, FNx, FPx, FQx, FSx, FTx, FUx, FVx, G2x, G3x, G4x, G5x, G6x, G7x, G8x, G9x, GBx, GDx, GEx, GGx, GHx, GJx, GQx, GSx, GTx, GUx, GVx, H9x, HAx, HBx, HCx, HDx, HJx, HRx, HTx, HVx, HWx, JBx, JCx, JDx, JFx, JHx, JJx, JKx, JNx, JPx, JSx, JTx, JUx, JVx, JWx, JXx, JYx, JZx, K2x, K9x, KAx, KBx, KJx, KKx, KLx, KPx, KRx, KTx, KVx, KYx, KZx, L3x, L5x, L6x, L7x • 2847-CTO, 22x, 29x, 2Ax, 2Gx, 2Hx, 2Px, 2Qx, 2Rx, 2Ux, 2Vx, 2Yx, 34x, 35x, 3Dx, 3Ex, 3Mx, 3Nx, 3Px, 3Vx, 3Wx, 46x, 47x, 48x, 49x, 4Cx, 4Fx, 4Gx, 4Px, 4Rx, 4Ux, 4Wx, 5Ax, 5Bx, 5Cx, 5Dx, 5Ex, 5Fx, 5Gx, 5Kx, 5Lx, 5Px, 5Sx, 5Wx, 5Xx, 62x, 65x, 6Cx, 6Dx, 6Ex, 6Fx, 6Jx, 6Kx, 6Nx, 6Px, 6Rx, 6Sx, 6Tx, 6Ux, 6Vx, 6Wx, 6Xx, 6Yx, 6Zx, 74x, 75x, 76x, 77x, 78x, 7Ax, 7Rx, 7Wx, 7Xx, 7Yx, 7Zx, 82x, 83x, 84x, 85x, 86x, 87x, 88x, 8Ex, 8Fx, 8Hx, 8Jx, 8Lx, 8Vx, 8Xx, 8Zx, 92x, 93x, 94x, 95x, 96x, 97x, 98x, 99x, 9Ax, 9Bx, 9Cx, 9Dx, 9Ex, 9Fx, 9Gx, 9Px, 9Qx, A5x, A6x, A8x, A9x, AAx, ACx, ADx, AEx, AFx, AQx, ARx, ASx, AXx, AYx, B2x, B3x, B8x, BAx, BCx, BDx, BEx, BFx, BGx, BHx, BJx, BKx, BMx, BNx, BRx, BSx, BTx, BWx, BXx, BYx, C4x, C6x, C7x, C8x, CBx, CDx, CGx, CJx, CLx, CMx, CNx, CPx, CRx, CUx, CVx, CWx, CXx, CYx, D3x, D5x, D6x, D7x, D8x, DBx, DCx, DEx, DFx, DGx, DLx, Q2x, Q3x, Q4x, QBx, QCx, QFx, QJx, R5x, R7x, RAx, RDx, RGx, RKx, RNx, RQx, RTx • 2873-CTO • 2874-CTO, 36x, 3Kx, 3Nx, 3Qx, 3Sx, 4Ax, 4Dx, 4Gx, 4Hx, 4Jx, 4Nx, 4Qx, 53x, 55x, 58x, 5Bx, 5Dx, 5Gx, 5Kx, 5Mx, 5Qx, 64x, 65x, 66x, 67x, 69x, 6Ax, 6Fx, 6Gx, 6Kx, 6Lx, 6Mx, 6Nx, 6Sx, 6Vx, 72x, 74x, 75x, 76x, 7Ex, 7Fx, 7Jx, 7Mx, 7Px, 7Qx, 7Xx, 82x, 83x, 8Ex, 8Jx, 8Nx • 2875-CTO, 27x, 28x, 2Bx, 2Cx, 2Lx, 2Ux, 2Xx, 36x, 48x, 4Lx, 4Px, 4Vx, 4Wx, 58x, 59x, 5Cx, 5Ex, 5Fx, R3x, R5x, R8x, RAx, RDx, RHx • 2931-CTO, 22x, 27x, 28x, 29x, 2Ax, 2Bx • 5072-CTO, 22x, 25x, 26x, 27x, 28x, 2Cx, 2Dx (to be continued)	41W0771	**

Table 40. Parts list—Overall (continued)

No.	FRU (Overall)	FRU no.	CRU ID
16	(continued) SATA hard disk drive, 320 GB, 5,400 rpm • 0530-CTO, 55x, 56x, 57x, 5Cx, 5Ex, 5Jx, 5Mx, 5Vx, 5Wx, 6Ax, 6Bx, 6Cx, 6Dx • 0553-CTO, 5Hx, 5Jx, 5Mx, 5Px, 5Rx, 6Bx, 6Fx, 6Gx, 6Hx, 6Jx, 6Kx, 6Lx, 6Mx, 6Nx, 75x, 78x, 7Dx, 7Gx, 7Jx, 7Lx, 7Mx, 7Nx, 7Px, 7Qx, 87x, 88x, 8Ex • 0585-CTO, 6Jx, 6Kx, 6Lx, 6Mx, 6Px, 6Qx, 6Rx, 6Sx, 6Tx, 6Ux, 75x • 0591-CTO • 4403-CTO, 3Ax, 3Zx, 43x, 49x, 4Kx, 4Lx, 4Mx, 4Sx, 4Tx, 4Xx, 59x, 5Ax, 5Bx, 5Dx, 5Hx, 5Nx, 67x, 6Fx, 6Gx, 6Jx, 6Kx, 6Px, 6Qx, 6Rx, 72x, 73x • 4404-CTO, 3Xx, 46x, 4Rx, 4Sx, 4Tx • 2550-CTO, 63x, 64x, 65x, 66x, 67x, 68x, 69x, 6Ax • 2597-CTO, 54x, 55x, 56x, 5Bx, 5Dx, 5Rx, 5Sx, 5Tx, 5Wx, 65x, 66x, 67x, 68x, 69x, 6Ex, 6Fx, 6Gx, 6Hx, 6Kx, 6Lx, 6Nx • 2598-CTO, 59x, 5Fx, 5Gx, 63x, 64x, 65x, 66x, 6Gx, 6Px, 74x, 7Gx, 7Hx, 7Jx, 7Kx, 7Xx, 7Yx, 7Zx • 2599-CTO • 4444-CTO, 3Cx, 3Ex, 3Lx, 3Wx, 3Yx, 42x, 45x, 4Nx, 4Px, 4Qx, 4Wx, 4Xx, 57x, 58x, 59x • 4447-CTO	41W0771	**

Table 40. Parts list—Overall (continued)

No.	FRU (Overall)	FRU no.	CRU ID
16	SATA hard disk drive, 320 GB, 5,400 rpm • 0616-CTO, 22x, 25x, 26x, 27x, 28x, 2Cx, 2Dx • 2842-CTO, 22x, 24x, 25x, 26x, 27x, 28x, 29x, 2Ax, 2Bx, 2Cx, 2Dx, 2Ex, 35x, 36x, 37x, 39x, 3Dx, 3Hx, 3Qx, 3Sx, 3Tx, 3Ux, 3Vx, 42x, 45x, 47x, 49x, 4Ax, 4Bx, 4Dx, 4Fx, 4Hx, 4Jx, 4Kx, 4Lx, 4Mx, 4Qx, 4Rx, 4Sx, 4Tx, 4Vx, 4Wx, 55x, 58x, 59x, 5Ax, 5Fx, 5Jx, 5Lx, 5Nx, 5Px, 5Qx, 5Rx, 5Ux, 5Vx, 5Wx, 5Xx, 5Yx, 5Zx, 62x, 63x, 64x, 68x, 69x, 6Ex, 6Fx, 6Kx, 6Rx, 6Sx, 6Xx, 6Yx, 74x, 7Bx, 7Dx, 7Gx, 7Jx, 7Px, 7Zx, 82x, 83x, 84x, 85x, 8Ax, 8Bx, 8Hx, 8Jx, 8Tx, 8Vx, 8Yx, 93x, 95x, 98x, 9Bx, 9Dx, 9Gx, 9Kx, 9Mx, 9Qx, 9Tx, 9Vx, 9Yx, A3x, A5x, A8x, AGx, AHx, AJx, AKx, APx, AQx, ATx, AUx, AXx, AYx, B2x, B3x, B4x, B5x, B7x, B8x, B9x, BAx, BBx, BGx, BHx, BKx, BNx, BPx, BQx, BTx, BXx, BZx, C2x, C3x, C4x, C5x, C6x, CCx, CGx, CHx, CJx, CKx, CLx, CQx, CRx, CSx, CUx, CVx, CWx, CXx, CYx, CZx, D2x, D3x, D4x, D5x, D6x, D7x, D8x, D9x, DAx, DBx, DCx, DEx, DGx, DHx, DJx, DKx, DLx, DMx, DPx, DQx, DRx, DSx, DVx, DWx, E2x, E3x, E4x, E5x, E6x, E7x, E8x, E9x, EDx, EGx, EKx, EPx, ESx, EVx, EZx, F2x, F5x, FAx, FCx, FDx, FEx, FFx, FGx, FHx, FMx, FNx, FPx, FQx, FSx, FTx, FUx, FVx, G2x, G3x, G4x, G5x, G6x, G7x, G8x, G9x, GBx, GDx, GEx, GGx, GHx, GJx, GQx, GSx, GTx, GUx, GVx, H9x, HAx, HBx, HCx, HDx, HJx, HRx, HTx, HVx, HWx, JBx, JCx, JDx, JFx, JHx, JJx, JKx, JNx, JPx, JSx, JTx, JUx, JVx, JWx, JXx, JYx, JZx, K2x, K9x, KAx, KBx, KJx, KKx, KLx, KPx, KRx, KTx, KVx, KYx, KZx, L3x, L5x, L6x, L7x • 2847-CTO, 22x, 29x, 2Ax, 2Gx, 2Hx, 2Px, 2Qx, 2Rx, 2Ux, 2Vx, 2Yx, 34x, 35x, 3Dx, 3Ex, 3Mx, 3Nx, 3Px, 3Vx, 3Wx, 46x, 47x, 48x, 49x, 4Cx, 4Fx, 4Gx, 4Px, 4Rx, 4Ux, 4Wx, 5Ax, 5Bx, 5Cx, 5Dx, 5Ex, 5Fx, 5Gx, 5Kx, 5Lx, 5Px, 5Sx, 5Wx, 5Xx, 62x, 65x, 6Cx, 6Dx, 6Ex, 6Fx, 6Jx, 6Kx, 6Nx, 6Px, 6Rx, 6Sx, 6Tx, 6Ux, 6Vx, 6Wx, 6Xx, 6Yx, 6Zx, 74x, 75x, 76x, 77x, 78x, 7Ax, 7Rx, 7Wx, 7Xx, 7Yx, 7Zx, 82x, 83x, 84x, 85x, 86x, 87x, 88x, 8Ex, 8Fx, 8Hx, 8Jx, 8Lx, 8Vx, 8Xx, 8Zx, 92x, 93x, 94x, 95x, 96x, 97x, 98x, 99x, 9Ax, 9Bx, 9Cx, 9Dx, 9Ex, 9Fx, 9Gx, 9Px, 9Qx, A5x, A6x, A8x, A9x, AAx, ACx, ADx, AEx, AFx, AQx, ARx, ASx, AXx, AYx, B2x, B3x, B8x, BAx, BCx, BDx, BEx, BFx, BGx, BHx, BJx, BKx, BMx, BNx, BRx, BSx, BTx, BWx, BXx, BYx, C4x, C6x, C7x, C8x, CBx, CDx, CGx, CJx, CLx, CMx, CNx, CPx, CRx, CUx, CVx, CWx, CXx, CYx, D3x, D5x, D6x, D7x, D8x, DBx, DCx, DEx, DFx, DGx, DLx, Q2x, Q3x, Q4x, QBx, QCx, QFx, QJx, R5x, R7x, RAx, RDx, RGx, RKx, RNx, RQx, RTx • 2873-CTO • 2874-CTO, 36x, 3Kx, 3Nx, 3Qx, 3Sx, 4Ax, 4Dx, 4Gx, 4Hx, 4Jx, 4Nx, 4Qx, 53x, 55x, 58x, 5Bx, 5Dx, 5Gx, 5Kx, 5Mx, 5Qx, 64x, 65x, 66x, 67x, 69x, 6Ax, 6Fx, 6Gx, 6Kx, 6Lx, 6Mx, 6Nx, 6Sx, 6Vx, 72x, 74x, 75x, 76x, 7Ex, 7Fx, 7Jx, 7Mx, 7Px, 7Qx, 7Xx, 82x, 83x, 8Ex, 8Jx, 8Nx • 2875-CTO, 27x, 28x, 2Bx, 2Cx, 2Lx, 2Ux, 2Xx, 36x, 48x, 4Lx, 4Px, 4Vx, 4Wx, 58x, 59x, 5Cx, 5Ex, 5Fx, R3x, R5x, R8x, RAx, RDx, RHx • 2931-CTO, 22x, 27x, 28x, 29x, 2Ax, 2Bx • 5072-CTO, 22x, 25x, 26x, 27x, 28x, 2Cx, 2Dx (to be continued)	41W0787	**

Table 40. Parts list—Overall (continued)

No.	FRU (Overall)	FRU no.	CRU ID
16	(continued) SATA hard disk drive, 320 GB, 5,400 rpm • 0530-CTO, 55x, 56x, 57x, 5Cx, 5Ex, 5Jx, 5Mx, 5Vx, 5Wx, 6Ax, 6Bx, 6Cx, 6Dx • 0553-CTO, 5Hx, 5Jx, 5Mx, 5Px, 5Rx, 6Bx, 6Fx, 6Gx, 6Hx, 6Jx, 6Kx, 6Lx, 6Mx, 6Nx, 75x, 78x, 7Dx, 7Gx, 7Jx, 7Lx, 7Mx, 7Nx, 7Px, 7Qx, 87x, 88x, 8Ex • 0585-CTO, 6Jx, 6Kx, 6Lx, 6Mx, 6Px, 6Qx, 6Rx, 6Sx, 6Tx, 6Ux, 75x • 0591-CTO • 4403-CTO, 3Ax, 3Zx, 43x, 49x, 4Kx, 4Lx, 4Mx, 4Sx, 4Tx, 4Xx, 59x, 5Ax, 5Bx, 5Dx, 5Hx, 5Nx, 67x, 6Fx, 6Gx, 6Jx, 6Kx, 6Px, 6Qx, 6Rx, 72x, 73x • 4404-CTO, 3Xx, 46x, 4Rx, 4Sx, 4Tx • 2550-CTO, 63x, 64x, 65x, 66x, 67x, 68x, 69x, 6Ax • 2597-CTO, 54x, 55x, 56x, 5Bx, 5Dx, 5Rx, 5Sx, 5Tx, 5Wx, 65x, 66x, 67x, 68x, 69x, 6Ex, 6Fx, 6Gx, 6Hx, 6Kx, 6Lx, 6Nx • 2598-CTO, 59x, 5Fx, 5Gx, 63x, 64x, 65x, 66x, 6Gx, 6Px, 74x, 7Gx, 7Hx, 7Jx, 7Kx, 7Xx, 7Yx, 7Zx • 2599-CTO • 4444-CTO, 3Cx, 3Ex, 3Lx, 3Wx, 3Yx, 42x, 45x, 4Nx, 4Px, 4Qx, 4Wx, 4Xx, 57x, 58x, 59x • 4447-CTO	41W0787	**

Table 40. Parts list—Overall (continued)

No.	FRU (Overall)	FRU no.	CRU ID
16	SATA hard disk drive, 320 GB, 5,400 rpm • 0616-CTO, 22x, 25x, 26x, 27x, 28x, 2Cx, 2Dx • 2842-CTO, 22x, 24x, 25x, 26x, 27x, 28x, 29x, 2Ax, 2Bx, 2Cx, 2Dx, 2Ex, 35x, 36x, 37x, 39x, 3Dx, 3Hx, 3Qx, 3Sx, 3Tx, 3Ux, 3Vx, 42x, 45x, 47x, 49x, 4Ax, 4Bx, 4Dx, 4Fx, 4Hx, 4Jx, 4Kx, 4Lx, 4Mx, 4Qx, 4Rx, 4Sx, 4Tx, 4Vx, 4Wx, 55x, 58x, 59x, 5Ax, 5Fx, 5Jx, 5Lx, 5Nx, 5Px, 5Qx, 5Rx, 5Ux, 5Vx, 5Wx, 5Xx, 5Yx, 5Zx, 62x, 63x, 64x, 68x, 69x, 6Ex, 6Fx, 6Kx, 6Rx, 6Sx, 6Xx, 6Yx, 74x, 7Bx, 7Dx, 7Gx, 7Jx, 7Px, 7Zx, 82x, 83x, 84x, 85x, 8Ax, 8Bx, 8Hx, 8Jx, 8Tx, 8Vx, 8Yx, 93x, 95x, 98x, 9Bx, 9Dx, 9Gx, 9Kx, 9Mx, 9Qx, 9Tx, 9Vx, 9Yx, A3x, A5x, A8x, AGx, AHx, AJx, AKx, APx, AQx, ATx, AUx, AXx, AYx, B2x, B3x, B4x, B5x, B7x, B8x, B9x, BAx, BBx, BGx, BHx, BKx, BNx, BPx, BQx, BTx, BXx, BZx, C2x, C3x, C4x, C5x, C6x, CCx, CGx, CHx, CJx, CKx, CLx, CQx, CRx, CSx, CUx, CVx, CWx, CXx, CYx, CZx, D2x, D3x, D4x, D5x, D6x, D7x, D8x, D9x, DAx, DBx, DCx, DEx, DGx, DHx, DJx, DKx, DLx, DMx, DPx, DQx, DRx, DSx, DVx, DWx, E2x, E3x, E4x, E5x, E6x, E7x, E8x, E9x, EDx, EGx, EKx, EPx, ESx, EVx, EZx, F2x, F5x, FAx, FCx, FDx, FEx, FFx, FGx, FHx, FMx, FNx, FPx, FQx, FSx, FTx, FUx, FVx, G2x, G3x, G4x, G5x, G6x, G7x, G8x, G9x, GBx, GDx, GEx, GGx, GHx, GJx, GQx, GSx, GTx, GUx, GVx, H9x, HAx, HBx, HCx, HDx, HJx, HRx, HTx, HVx, HWx, JBx, JCx, JDx, JFx, JHx, JJx, JKx, JNx, JPx, JSx, JTx, JUx, JVx, JWx, JXx, JYx, JZx, K2x, K9x, KAx, KBx, KJx, KKx, KLx, KPx, KRx, KTx, KVx, KYx, KZx, L3x, L5x, L6x, L7x • 2847-CTO, 22x, 29x, 2Ax, 2Gx, 2Hx, 2Px, 2Qx, 2Rx, 2Ux, 2Vx, 2Yx, 34x, 35x, 3Dx, 3Ex, 3Mx, 3Nx, 3Px, 3Vx, 3Wx, 46x, 47x, 48x, 49x, 4Cx, 4Fx, 4Gx, 4Px, 4Rx, 4Ux, 4Wx, 5Ax, 5Bx, 5Cx, 5Dx, 5Ex, 5Fx, 5Gx, 5Kx, 5Lx, 5Px, 5Sx, 5Wx, 5Xx, 62x, 65x, 6Cx, 6Dx, 6Ex, 6Fx, 6Jx, 6Kx, 6Nx, 6Px, 6Rx, 6Sx, 6Tx, 6Ux, 6Vx, 6Wx, 6Xx, 6Yx, 6Zx, 74x, 75x, 76x, 77x, 78x, 7Ax, 7Rx, 7Wx, 7Xx, 7Yx, 7Zx, 82x, 83x, 84x, 85x, 86x, 87x, 88x, 8Ex, 8Fx, 8Hx, 8Jx, 8Lx, 8Vx, 8Xx, 8Zx, 92x, 93x, 94x, 95x, 96x, 97x, 98x, 99x, 9Ax, 9Bx, 9Cx, 9Dx, 9Ex, 9Fx, 9Gx, 9Px, 9Qx, A5x, A6x, A8x, A9x, AAx, ACx, ADx, AEx, AFx, AQx, ARx, ASx, AXx, AYx, B2x, B3x, B8x, BAx, BCx, BDx, BEx, BFx, BGx, BHx, BJx, BKx, BMx, BNx, BRx, BSx, BTx, BWx, BXx, BYx, C4x, C6x, C7x, C8x, CBx, CDx, CGx, CJx, CLx, CMx, CNx, CPx, CRx, CUx, CVx, CWx, CXx, CYx, D3x, D5x, D6x, D7x, D8x, DBx, DCx, DEx, DFx, DGx, DLx, Q2x, Q3x, Q4x, QBx, QCx, QFx, QJx, R5x, R7x, RAx, RDx, RGx, RKx, RNx, RQx, RTx • 2873-CTO • 2874-CTO, 36x, 3Kx, 3Nx, 3Qx, 3Sx, 4Ax, 4Dx, 4Gx, 4Hx, 4Jx, 4Nx, 4Qx, 53x, 55x, 58x, 5Bx, 5Dx, 5Gx, 5Kx, 5Mx, 5Qx, 64x, 65x, 66x, 67x, 69x, 6Ax, 6Fx, 6Gx, 6Kx, 6Lx, 6Mx, 6Nx, 6Sx, 6Vx, 72x, 74x, 75x, 76x, 7Ex, 7Fx, 7Jx, 7Mx, 7Px, 7Qx, 7Xx, 82x, 83x, 8Ex, 8Jx, 8Nx • 2875-CTO, 27x, 28x, 2Bx, 2Cx, 2Lx, 2Ux, 2Xx, 36x, 48x, 4Lx, 4Px, 4Vx, 4Wx, 58x, 59x, 5Cx, 5Ex, 5Fx, R3x, R5x, R8x, RAx, RDx, RHx • 2931-CTO, 22x, 27x, 28x, 29x, 2Ax, 2Bx • 5072-CTO, 22x, 25x, 26x, 27x, 28x, 2Cx, 2Dx	75Y5025	**

Table 40. Parts list—Overall (continued)

No.	FRU (Overall)	FRU no.	CRU ID
16	SATA hard disk drive, 320 GB, 5,400 rpm • 0616-CTO, 22x, 25x, 26x, 27x, 28x, 2Cx, 2Dx • 2842-CTO, 22x, 24x, 25x, 26x, 27x, 28x, 29x, 2Ax, 2Bx, 2Cx, 2Dx, 2Ex, 35x, 36x, 37x, 39x, 3Dx, 3Hx, 3Qx, 3Sx, 3Tx, 3Ux, 3Vx, 42x, 45x, 47x, 49x, 4Ax, 4Bx, 4Dx, 4Fx, 4Hx, 4Jx, 4Kx, 4Lx, 4Mx, 4Qx, 4Rx, 4Sx, 4Tx, 4Vx, 4Wx, 55x, 58x, 59x, 5Ax, 5Fx, 5Jx, 5Lx, 5Nx, 5Px, 5Qx, 5Rx, 5Ux, 5Vx, 5Wx, 5Xx, 5Yx, 5Zx, 62x, 63x, 64x, 68x, 69x, 6Ex, 6Fx, 6Kx, 6Rx, 6Sx, 6Xx, 6Yx, 74x, 7Bx, 7Dx, 7Gx, 7Jx, 7Px, 7Zx, 82x, 83x, 84x, 85x, 8Ax, 8Bx, 8Hx, 8Jx, 8Tx, 8Vx, 8Yx, 93x, 95x, 98x, 9Bx, 9Dx, 9Gx, 9Kx, 9Mx, 9Qx, 9Tx, 9Vx, 9Yx, A3x, A5x, A8x, AGx, AHx, AJx, AKx, APx, AQx, ATx, AUx, AXx, AYx, B2x, B3x, B4x, B5x, B7x, B8x, B9x, BAx, BBx, BGx, BHx, BKx, BNx, BPx, BQx, BTx, BXx, BZx, C2x, C3x, C4x, C5x, C6x, CCx, CGx, CHx, CJx, CKx, CLx, CQx, CRx, CSx, CUx, CVx, CWx, CXx, CYx, CZx, D2x, D3x, D4x, D5x, D6x, D7x, D8x, D9x, DAx, DBx, DCx, DEx, DGx, DHx, DJx, DKx, DLx, DMx, DPx, DQx, DRx, DSx, DVx, DWx, E2x, E3x, E4x, E5x, E6x, E7x, E8x, E9x, EDx, EGx, EKx, EPx, ESx, EVx, EZx, F2x, F5x, FAx, FCx, FDx, FEx, FFx, FGx, FHx, FMx, FNx, FPx, FQx, FSx, FTx, FUx, FVx, G2x, G3x, G4x, G5x, G6x, G7x, G8x, G9x, GBx, GDx, GEx, GGx, GHx, GJx, GQx, GSx, GTx, GUx, GVx, H9x, HAx, HBx, HCx, HDx, HJx, HRx, HTx, HVx, HWx, JBx, JCx, JDx, JFx, JHx, JJx, JKx, JNx, JPx, JSx, JTx, JUx, JVx, JWx, JXx, JYx, JZx, K2x, K9x, KAx, KBx, KJx, KKx, KLx, KPx, KRx, KTx, KVx, KYx, KZx, L3x, L5x, L6x, L7x • 2847-CTO, 22x, 29x, 2Ax, 2Gx, 2Hx, 2Px, 2Qx, 2Rx, 2Ux, 2Vx, 2Yx, 34x, 35x, 3Dx, 3Ex, 3Mx, 3Nx, 3Px, 3Vx, 3Wx, 46x, 47x, 48x, 49x, 4Cx, 4Fx, 4Gx, 4Px, 4Rx, 4Ux, 4Wx, 5Ax, 5Bx, 5Cx, 5Dx, 5Ex, 5Fx, 5Gx, 5Kx, 5Lx, 5Px, 5Sx, 5Wx, 5Xx, 62x, 65x, 6Cx, 6Dx, 6Ex, 6Fx, 6Jx, 6Kx, 6Nx, 6Px, 6Rx, 6Sx, 6Tx, 6Ux, 6Vx, 6Wx, 6Xx, 6Yx, 6Zx, 74x, 75x, 76x, 77x, 78x, 7Ax, 7Rx, 7Wx, 7Xx, 7Yx, 7Zx, 82x, 83x, 84x, 85x, 86x, 87x, 88x, 8Ex, 8Fx, 8Hx, 8Jx, 8Lx, 8Vx, 8Xx, 8Zx, 92x, 93x, 94x, 95x, 96x, 97x, 98x, 99x, 9Ax, 9Bx, 9Cx, 9Dx, 9Ex, 9Fx, 9Gx, 9Px, 9Qx, A5x, A6x, A8x, A9x, AAx, ACx, ADx, AEx, AFx, AQx, ARx, ASx, AXx, AYx, B2x, B3x, B8x, BAx, BCx, BDx, BEx, BFx, BGx, BHx, BJx, BKx, BMx, BNx, BRx, BSx, BTx, BWx, BXx, BYx, C4x, C6x, C7x, C8x, CBx, CDx, CGx, CJx, CLx, CMx, CNx, CPx, CRx, CUx, CVx, CWx, CXx, CYx, D3x, D5x, D6x, D7x, D8x, DBx, DCx, DEx, DFx, DGx, DLx, Q2x, Q3x, Q4x, QBx, QCx, QFx, QJx, R5x, R7x, RAx, RDx, RGx, RKx, RNx, RQx, RTx • 2873-CTO • 2874-CTO, 36x, 3Kx, 3Nx, 3Qx, 3Sx, 4Ax, 4Dx, 4Gx, 4Hx, 4Jx, 4Nx, 4Qx, 53x, 55x, 58x, 5Bx, 5Dx, 5Gx, 5Kx, 5Mx, 5Qx, 64x, 65x, 66x, 67x, 69x, 6Ax, 6Fx, 6Gx, 6Kx, 6Lx, 6Mx, 6Nx, 6Sx, 6Vx, 72x, 74x, 75x, 76x, 7Ex, 7Fx, 7Jx, 7Mx, 7Px, 7Qx, 7Xx, 82x, 83x, 8Ex, 8Jx, 8Nx • 2875-CTO, 27x, 28x, 2Bx, 2Cx, 2Lx, 2Ux, 2Xx, 36x, 48x, 4Lx, 4Px, 4Vx, 4Wx, 58x, 59x, 5Cx, 5Ex, 5Fx, R3x, R5x, R8x, RAx, RDx, RHx • 2931-CTO, 22x, 27x, 28x, 29x, 2Ax, 2Bx • 5072-CTO, 22x, 25x, 26x, 27x, 28x, 2Cx, 2Dx (to be continued)	75Y5035	**

Table 40. Parts list—Overall (continued)

No.	FRU (Overall)	FRU no.	CRU ID
16	(continued) SATA hard disk drive, 320 GB, 5,400 rpm • 0530-CTO, 55x, 56x, 57x, 5Cx, 5Ex, 5Jx, 5Mx, 5Vx, 5Wx, 6Ax, 6Bx, 6Cx, 6Dx • 0553-CTO, 5Hx, 5Jx, 5Mx, 5Px, 5Rx, 6Bx, 6Fx, 6Gx, 6Hx, 6Jx, 6Kx, 6Lx, 6Mx, 6Nx, 75x, 78x, 7Dx, 7Gx, 7Jx, 7Lx, 7Mx, 7Nx, 7Px, 7Qx, 87x, 88x, 8Ex • 0585-CTO, 6Jx, 6Kx, 6Lx, 6Mx, 6Px, 6Qx, 6Rx, 6Sx, 6Tx, 6Ux, 75x • 0591-CTO • 4403-CTO, 3Ax, 3Zx, 43x, 49x, 4Kx, 4Lx, 4Mx, 4Sx, 4Tx, 4Xx, 59x, 5Ax, 5Bx, 5Dx, 5Hx, 5Nx, 67x, 6Fx, 6Gx, 6Jx, 6Kx, 6Px, 6Qx, 6Rx, 72x, 73x • 4404-CTO, 3Xx, 46x, 4Rx, 4Sx, 4Tx • 2550-CTO, 63x, 64x, 65x, 66x, 67x, 68x, 69x, 6Ax • 2597-CTO, 54x, 55x, 56x, 5Bx, 5Dx, 5Rx, 5Sx, 5Tx, 5Wx, 65x, 66x, 67x, 68x, 69x, 6Ex, 6Fx, 6Gx, 6Hx, 6Kx, 6Lx, 6Nx • 2598-CTO, 59x, 5Fx, 5Gx, 63x, 64x, 65x, 66x, 6Gx, 6Px, 74x, 7Gx, 7Hx, 7Jx, 7Kx, 7Xx, 7Yx, 7Zx • 2599-CTO • 4444-CTO, 3Cx, 3Ex, 3Lx, 3Wx, 3Yx, 42x, 45x, 4Nx, 4Px, 4Qx, 4Wx, 4Xx, 57x, 58x, 59x • 4447-CTO	75Y5035	**

Table 40. Parts list—Overall (continued)

No.	FRU (Overall)	FRU no.	CRU ID
16	SATA hard disk drive, 320 GB, 5,400 rpm • 0616-CTO, 22x, 25x, 26x, 27x, 28x, 2Cx, 2Dx • 2842-CTO, 22x, 24x, 25x, 26x, 27x, 28x, 29x, 2Ax, 2Bx, 2Cx, 2Dx, 2Ex, 35x, 36x, 37x, 39x, 3Dx, 3Hx, 3Qx, 3Sx, 3Tx, 3Ux, 3Vx, 42x, 45x, 47x, 49x, 4Ax, 4Bx, 4Dx, 4Fx, 4Hx, 4Jx, 4Kx, 4Lx, 4Mx, 4Qx, 4Rx, 4Sx, 4Tx, 4Vx, 4Wx, 55x, 58x, 59x, 5Ax, 5Fx, 5Jx, 5Lx, 5Nx, 5Px, 5Qx, 5Rx, 5Ux, 5Vx, 5Wx, 5Xx, 5Yx, 5Zx, 62x, 63x, 64x, 68x, 69x, 6Ex, 6Fx, 6Kx, 6Rx, 6Sx, 6Xx, 6Yx, 74x, 7Bx, 7Dx, 7Gx, 7Jx, 7Px, 7Zx, 82x, 83x, 84x, 85x, 8Ax, 8Bx, 8Hx, 8Jx, 8Tx, 8Vx, 8Yx, 93x, 95x, 98x, 9Bx, 9Dx, 9Gx, 9Kx, 9Mx, 9Qx, 9Tx, 9Vx, 9Yx, A3x, A5x, A8x, AGx, AHx, AJx, AKx, APx, AQx, ATx, AUx, AXx, AYx, B2x, B3x, B4x, B5x, B7x, B8x, B9x, BAx, BBx, BGx, BHx, BKx, BNx, BPx, BQx, BTx, BXx, BZx, C2x, C3x, C4x, C5x, C6x, CCx, CGx, CHx, CJx, CKx, CLx, CQx, CRx, CSx, CUx, CVx, CWx, CXx, CYx, CZx, D2x, D3x, D4x, D5x, D6x, D7x, D8x, D9x, DAx, DBx, DCx, DEx, DGx, DHx, DJx, DKx, DLx, DMx, DPx, DQx, DRx, DSx, DVx, DWx, E2x, E3x, E4x, E5x, E6x, E7x, E8x, E9x, EDx, EGx, EKx, EPx, ESx, EVx, EZx, F2x, F5x, FAx, FCx, FDx, FEx, FFx, FGx, FHx, FMx, FNx, FPx, FQx, FSx, FTx, FUx, FVx, G2x, G3x, G4x, G5x, G6x, G7x, G8x, G9x, GBx, GDx, GEx, GGx, GHx, GJx, GQx, GSx, GTx, GUx, GVx, H9x, HAx, HBx, HCx, HDx, HJx, HRx, HTx, HVx, HWx, JBx, JCx, JDx, JFx, JHx, JJx, JKx, JNx, JPx, JSx, JTx, JUx, JVx, JWx, JXx, JYx, JZx, K2x, K9x, KAx, KBx, KJx, KKx, KLx, KPx, KRx, KTx, KVx, KYx, KZx, L3x, L5x, L6x, L7x • 2847-CTO, 22x, 29x, 2Ax, 2Gx, 2Hx, 2Px, 2Qx, 2Rx, 2Ux, 2Vx, 2Yx, 34x, 35x, 3Dx, 3Ex, 3Mx, 3Nx, 3Px, 3Vx, 3Wx, 46x, 47x, 48x, 49x, 4Cx, 4Fx, 4Gx, 4Px, 4Rx, 4Ux, 4Wx, 5Ax, 5Bx, 5Cx, 5Dx, 5Ex, 5Fx, 5Gx, 5Kx, 5Lx, 5Px, 5Sx, 5Wx, 5Xx, 62x, 65x, 6Cx, 6Dx, 6Ex, 6Fx, 6Jx, 6Kx, 6Nx, 6Px, 6Rx, 6Sx, 6Tx, 6Ux, 6Vx, 6Wx, 6Xx, 6Yx, 6Zx, 74x, 75x, 76x, 77x, 78x, 7Ax, 7Rx, 7Wx, 7Xx, 7Yx, 7Zx, 82x, 83x, 84x, 85x, 86x, 87x, 88x, 8Ex, 8Fx, 8Hx, 8Jx, 8Lx, 8Vx, 8Xx, 8Zx, 92x, 93x, 94x, 95x, 96x, 97x, 98x, 99x, 9Ax, 9Bx, 9Cx, 9Dx, 9Ex, 9Fx, 9Gx, 9Px, 9Qx, A5x, A6x, A8x, A9x, AAx, ACx, ADx, AEx, AFx, AQx, ARx, ASx, AXx, AYx, B2x, B3x, B8x, BAx, BCx, BDx, BEx, BFx, BGx, BHx, BJx, BKx, BMx, BNx, BRx, BSx, BTx, BWx, BXx, BYx, C4x, C6x, C7x, C8x, CBx, CDx, CGx, CJx, CLx, CMx, CNx, CPx, CRx, CUx, CVx, CWx, CXx, CYx, D3x, D5x, D6x, D7x, D8x, DBx, DCx, DEx, DFx, DGx, DLx, Q2x, Q3x, Q4x, QBx, QCx, QFx, QJx, R5x, R7x, RAx, RDx, RGx, RKx, RNx, RQx, RTx • 2873-CTO • 2874-CTO, 36x, 3Kx, 3Nx, 3Qx, 3Sx, 4Ax, 4Dx, 4Gx, 4Hx, 4Jx, 4Nx, 4Qx, 53x, 55x, 58x, 5Bx, 5Dx, 5Gx, 5Kx, 5Mx, 5Qx, 64x, 65x, 66x, 67x, 69x, 6Ax, 6Fx, 6Gx, 6Kx, 6Lx, 6Mx, 6Nx, 6Sx, 6Vx, 72x, 74x, 75x, 76x, 7Ex, 7Fx, 7Jx, 7Mx, 7Px, 7Qx, 7Xx, 82x, 83x, 8Ex, 8Jx, 8Nx • 2875-CTO, 27x, 28x, 2Bx, 2Cx, 2Lx, 2Ux, 2Xx, 36x, 48x, 4Lx, 4Px, 4Vx, 4Wx, 58x, 59x, 5Cx, 5Ex, 5Fx, R3x, R5x, R8x, RAx, RDx, RHx • 2931-CTO, 22x, 27x, 28x, 29x, 2Ax, 2Bx • 5072-CTO, 22x, 25x, 26x, 27x, 28x, 2Cx, 2Dx (to be continued)	75Y5045	**

Table 40. Parts list—Overall (continued)

No.	FRU (Overall)	FRU no.	CRU ID
16	(continued) SATA hard disk drive, 320 GB, 5,400 rpm • 0530-CTO, 55x, 56x, 57x, 5Cx, 5Ex, 5Jx, 5Mx, 5Vx, 5Wx, 6Ax, 6Bx, 6Cx, 6Dx • 0553-CTO, 5Hx, 5Jx, 5Mx, 5Px, 5Rx, 6Bx, 6Fx, 6Gx, 6Hx, 6Jx, 6Kx, 6Lx, 6Mx, 6Nx, 75x, 78x, 7Dx, 7Gx, 7Jx, 7Lx, 7Mx, 7Nx, 7Px, 7Qx, 87x, 88x, 8Ex • 0585-CTO, 6Jx, 6Kx, 6Lx, 6Mx, 6Px, 6Qx, 6Rx, 6Sx, 6Tx, 6Ux, 75x • 0591-CTO • 4403-CTO, 3Ax, 3Zx, 43x, 49x, 4Kx, 4Lx, 4Mx, 4Sx, 4Tx, 4Xx, 59x, 5Ax, 5Bx, 5Dx, 5Hx, 5Nx, 67x, 6Fx, 6Gx, 6Jx, 6Kx, 6Px, 6Qx, 6Rx, 72x, 73x • 4404-CTO, 3Xx, 46x, 4Rx, 4Sx, 4Tx • 2550-CTO, 63x, 64x, 65x, 66x, 67x, 68x, 69x, 6Ax • 2597-CTO, 54x, 55x, 56x, 5Bx, 5Dx, 5Rx, 5Sx, 5Tx, 5Wx, 65x, 66x, 67x, 68x, 69x, 6Ex, 6Fx, 6Gx, 6Hx, 6Kx, 6Lx, 6Nx • 2598-CTO, 59x, 5Fx, 5Gx, 63x, 64x, 65x, 66x, 6Gx, 6Px, 74x, 7Gx, 7Hx, 7Jx, 7Kx, 7Xx, 7Yx, 7Zx • 2599-CTO • 4444-CTO, 3Cx, 3Ex, 3Lx, 3Wx, 3Yx, 42x, 45x, 4Nx, 4Px, 4Qx, 4Wx, 4Xx, 57x, 58x, 59x • 4447-CTO	75Y5045	**
16	SATA hard disk drive, 320 GB, 5,400 rpm, 7 mm height • 0616-CTO • 2842-CTO • 2874-CTO • 2931-CTO • 0530-CTO, 55x, 56x, 57x, 5Cx, 5Ex, 5Jx, 5Mx, 5Vx, 5Wx, 6Ax, 6Bx, 6Cx, 6Dx • 0553-CTO, 5Hx, 5Jx, 5Mx, 5Px, 5Rx, 6Bx, 6Fx, 6Gx, 6Hx, 6Jx, 6Kx, 6Lx, 6Mx, 6Nx, 75x, 78x, 7Dx, 7Gx, 7Jx, 7Lx, 7Mx, 7Nx, 7Px, 7Qx, 87x, 88x, 8Ex • 0585-CTO, 6Jx, 6Kx, 6Lx, 6Mx, 6Px, 6Qx, 6Rx, 6Sx, 6Tx, 6Ux, 75x • 0591-CTO • 4403-CTO, 3Ax, 3Zx, 43x, 49x, 4Kx, 4Lx, 4Mx, 4Sx, 4Tx, 4Xx, 59x, 5Ax, 5Bx, 5Dx, 5Hx, 5Nx, 67x, 6Fx, 6Gx, 6Jx, 6Kx, 6Px, 6Qx, 6Rx, 72x, 73x • 4404-CTO, 3Xx, 46x, 4Rx, 4Sx, 4Tx • 2550-CTO, 63x, 64x, 65x, 66x, 67x, 68x, 69x, 6Ax • 2597-CTO, 54x, 55x, 56x, 5Bx, 5Dx, 5Rx, 5Sx, 5Tx, 5Wx, 65x, 66x, 67x, 68x, 69x, 6Ex, 6Fx, 6Gx, 6Hx, 6Kx, 6Lx, 6Nx • 2598-CTO, 59x, 5Fx, 5Gx, 63x, 64x, 65x, 66x, 6Gx, 6Px, 74x, 7Gx, 7Hx, 7Jx, 7Kx, 7Xx, 7Yx, 7Zx • 2599-CTO • 4444-CTO, 3Cx, 3Ex, 3Lx, 3Wx, 3Yx, 42x, 45x, 4Nx, 4Px, 4Qx, 4Wx, 4Xx, 57x, 58x, 59x • 4447-CTO	75Y5135	**

Table 40. Parts list—Overall (continued)

No.	FRU (Overall)	FRU no.	CRU ID
16	SATA hard disk drive, 500 GB, 5,400 rpm • 2842-CTO, 4Nx, 4Xx, 54x, 56x, 5Bx, 65x, 6Ax, 6Bx, 6Gx, 6Hx, 6Lx, 6Mx, 6Nx, 6Tx, 6Ux, 6Zx, 72x, 75x, 76x, 77x, 78x, 86x, 8Cx, 8Dx, 8Kx, 8Lx, 8Wx, 8Zx, 96x, 99x, 9Ex, 9Hx, 9Nx, 9Rx, 9Wx, 9Zx, A6x, A9x, AAx, ABx, ACx, ADx, AEx, AFx, B6x, BJx, BMx, DTx, DUx, DXx, DYx, DZx, EEx, EHx, ELx, EQx, ETx, EWx, EXx, EYx, F3x, F4x, F6x, FBx, FWx, FXx, FYx, FZx, GCx, HKx, HLx, HMx, HNx, HPx, HQx, JEx, JGx • 2847-CTO, 23x, 36x, 4Dx, 5Mx, 5Qx, 5Tx, 5Yx, 63x, 66x, 67x, 6Qx, 79x, 7Sx, 8Gx, 9Rx, 9Sx, 9Tx, A4x, A7x, ABx, ALx, AMx, BPx, BZx, C2x, C9x, CEx, CFx, CHx, CKx, R8x, RBx, RHx, RLx, RRx, RUx, RVx, RWx, RXx • 2873-CTO, 33x • 2874-CTO, 56x, 59x, 5Ex, 5Hx, 5Nx, 5Rx, 7Bx, 7Cx, 7Dx, 7Kx, 7Nx, 84x, 85x, 86x • 2875-CTO, 4Ax, 4Bx, 4Rx, 4Sx, 4Xx, 5Ax, 5Gx, R6x, RBx, RFx, RJx • 2931-CTO, 26x • 0530-CTO • 0553-CTO, 8Dx • 0585-CTO • 0591-CTO • 4403-CTO, 6Sx, 6Tx • 4404-CTO, 4Ux, 4Vx • 2550-CTO • 2597-CTO • 2598-CTO • 2599-CTO • 4444-CTO • 4447-CTO	41W0781	**
16	SATA hard disk drive, 500 GB, 5,400 rpm • 2842-CTO, 4Nx, 4Xx, 54x, 56x, 5Bx, 65x, 6Ax, 6Bx, 6Gx, 6Hx, 6Lx, 6Mx, 6Nx, 6Tx, 6Ux, 6Zx, 72x, 75x, 76x, 77x, 78x, 86x, 8Cx, 8Dx, 8Kx, 8Lx, 8Wx, 8Zx, 96x, 99x, 9Ex, 9Hx, 9Nx, 9Rx, 9Wx, 9Zx, A6x, A9x, AAx, ABx, ACx, ADx, AEx, AFx, B6x, BJx, BMx, DTx, DUx, DXx, DYx, DZx, EEx, EHx, ELx, EQx, ETx, EWx, EXx, EYx, F3x, F4x, F6x, FBx, FWx, FXx, FYx, FZx, GCx, HKx, HLx, HMx, HNx, HPx, HQx, JEx, JGx • 2847-CTO, 23x, 36x, 4Dx, 5Mx, 5Qx, 5Tx, 5Yx, 63x, 66x, 67x, 6Qx, 79x, 7Sx, 8Gx, 9Rx, 9Sx, 9Tx, A4x, A7x, ABx, ALx, AMx, BPx, BZx, C2x, C9x, CEx, CFx, CHx, CKx, R8x, RBx, RHx, RLx, RRx, RUx, RVx, RWx, RXx • 2873-CTO, 33x • 2874-CTO, 56x, 59x, 5Ex, 5Hx, 5Nx, 5Rx, 7Bx, 7Cx, 7Dx, 7Kx, 7Nx, 84x, 85x, 86x • 2875-CTO, 4Ax, 4Bx, 4Rx, 4Sx, 4Xx, 5Ax, 5Gx, R6x, RBx, RFx, RJx • 2931-CTO, 26x • 0530-CTO • 0553-CTO, 8Dx • 0585-CTO • 0591-CTO • 4403-CTO, 6Sx, 6Tx • 4404-CTO, 4Ux, 4Vx • 2550-CTO • 2597-CTO • 2598-CTO • 2599-CTO • 4444-CTO • 4447-CTO	41W0773	**

Table 40. Parts list—Overall (continued)

No.	FRU (Overall)	FRU no.	CRU ID
16	SATA hard disk drive, 500 GB, 5,400 rpm • 2842-CTO, 4Nx, 4Xx, 54x, 56x, 5Bx, 65x, 6Ax, 6Bx, 6Gx, 6Hx, 6Lx, 6Mx, 6Nx, 6Tx, 6Ux, 6Zx, 72x, 75x, 76x, 77x, 78x, 86x, 8Cx, 8Dx, 8Kx, 8Lx, 8Wx, 8Zx, 96x, 99x, 9Ex, 9Hx, 9Nx, 9Rx, 9Wx, 9Zx, A6x, A9x, AAx, ABx, ACx, ADx, AEx, AFx, B6x, BJx, BMx, DTx, DUx, DXx, DYx, DZx, EEx, EHx, ELx, EQx, ETx, EWx, EXx, EYx, F3x, F4x, F6x, FBx, FWx, FXx, FYx, FZx, GCx, HKx, HLx, HMx, HNx, HPx, HQx, JEx, JGx • 2847-CTO, 23x, 36x, 4Dx, 5Mx, 5Qx, 5Tx, 5Yx, 63x, 66x, 67x, 6Qx, 79x, 7Sx, 8Gx, 9Rx, 9Sx, 9Tx, A4x, A7x, ABx, ALx, AMx, BPx, BZx, C2x, C9x, CEx, CFx, CHx, CKx, R8x, RBx, RHx, RLx, RRx, RUx, RVx, RWx, RXx • 2873-CTO, 33x • 2874-CTO, 56x, 59x, 5Ex, 5Hx, 5Nx, 5Rx, 7Bx, 7Cx, 7Dx, 7Kx, 7Nx, 84x, 85x, 86x • 2875-CTO, 4Ax, 4Bx, 4Rx, 4Sx, 4Xx, 5Ax, 5Gx, R6x, RBx, RFx, RJx • 2931-CTO, 26x • 0530-CTO • 0553-CTO, 8Dx • 0585-CTO • 0591-CTO • 4403-CTO, 6Sx, 6Tx • 4404-CTO, 4Ux, 4Vx • 2550-CTO • 2597-CTO • 2598-CTO • 2599-CTO • 4444-CTO • 4447-CTO	41W0789	**
16	SATA hard disk drive, 500 GB, 5,400 rpm • 2842-CTO, 4Nx, 4Xx, 54x, 56x, 5Bx, 65x, 6Ax, 6Bx, 6Gx, 6Hx, 6Lx, 6Mx, 6Nx, 6Tx, 6Ux, 6Zx, 72x, 75x, 76x, 77x, 78x, 86x, 8Cx, 8Dx, 8Kx, 8Lx, 8Wx, 8Zx, 96x, 99x, 9Ex, 9Hx, 9Nx, 9Rx, 9Wx, 9Zx, A6x, A9x, AAx, ABx, ACx, ADx, AEx, AFx, B6x, BJx, BMx, DTx, DUx, DXx, DYx, DZx, EEx, EHx, ELx, EQx, ETx, EWx, EXx, EYx, F3x, F4x, F6x, FBx, FWx, FXx, FYx, FZx, GCx, HKx, HLx, HMx, HNx, HPx, HQx, JEx, JGx • 2847-CTO, 23x, 36x, 4Dx, 5Mx, 5Qx, 5Tx, 5Yx, 63x, 66x, 67x, 6Qx, 79x, 7Sx, 8Gx, 9Rx, 9Sx, 9Tx, A4x, A7x, ABx, ALx, AMx, BPx, BZx, C2x, C9x, CEx, CFx, CHx, CKx, R8x, RBx, RHx, RLx, RRx, RUx, RVx, RWx, RXx • 2873-CTO, 33x • 2874-CTO, 56x, 59x, 5Ex, 5Hx, 5Nx, 5Rx, 7Bx, 7Cx, 7Dx, 7Kx, 7Nx, 84x, 85x, 86x • 2875-CTO, 4Ax, 4Bx, 4Rx, 4Sx, 4Xx, 5Ax, 5Gx, R6x, RBx, RFx, RJx • 2931-CTO, 26x • 0530-CTO • 0553-CTO, 8Dx • 0585-CTO • 0591-CTO • 4403-CTO, 6Sx, 6Tx • 4404-CTO, 4Ux, 4Vx • 2550-CTO • 2597-CTO • 2598-CTO • 2599-CTO • 4444-CTO • 4447-CTO	75Y5047	**

Table 40. Parts list—Overall (continued)

No.	FRU (Overall)	FRU no.	CRU ID
16	SATA hard disk drive, 160 GB, 7,200 rpm • 0530-CTO, 32x, 52x, 62x, 63x, 68x, 69x, 6Lx, 6Mx • 0553-CTO, 42x, 43x, 57x, 58x, 6Px, 6Qx, 6Rx, 6Sx, 6Tx, 6Vx, 6Wx, 6Xx, 6Yx, 72x, 74x, 76x, 7Bx, 7Cx, 7Fx, 7Yx, 85x, 89x, R2x, R3x • 0585-CTO, 42x, 43x, 5Yx, 65x, 6Xx, 6Yx, 74x, 76x • 0591-CTO, 53x • 4403-CTO, 32x, 33x, 58x, 68x, 69x, 6Lx • 4404-CTO, 32x, 33x, 3Gx, 3Kx, 4Lx • 2550-CTO, 42x, 43x, 5Yx, 65x, 6Xx, 6Yx, 74x, 76x • 2597-CTO, 32x, 5Xx, 5Yx, 6Px, 6Qx • 2598-CTO, 43x, 52x, 53x, 55x, 6Jx, 6Kx, 6Lx, 6Sx, 6Tx, 6Vx, 73x, 75x, 7Ax, 7Vx, R2x, R3x • 2599-CTO, 53x • 4444-CTO, 32x, 33x, 3Mx, 3Px, 4Ex, 4Fx, 4Kx, 4Rx, 4Sx, 4Tx, 4Ux, 5Dx, 5Ex • 4447-CTO, 32x, 33x, 3Ex, 3Fx, 3Hx	60Y4805	**
16	SATA hard disk drive, 160 GB, 7,200 rpm • 0530-CTO, 32x, 52x, 62x, 63x, 68x, 69x, 6Lx, 6Mx • 0553-CTO, 42x, 43x, 57x, 58x, 6Px, 6Qx, 6Rx, 6Sx, 6Tx, 6Vx, 6Wx, 6Xx, 6Yx, 72x, 74x, 76x, 7Bx, 7Cx, 7Fx, 7Yx, 85x, 89x, R2x, R3x • 0585-CTO, 42x, 43x, 5Yx, 65x, 6Xx, 6Yx, 74x, 76x • 0591-CTO, 53x • 4403-CTO, 32x, 33x, 58x, 68x, 69x, 6Lx • 4404-CTO, 32x, 33x, 3Gx, 3Kx, 4Lx • 2550-CTO, 42x, 43x, 5Yx, 65x, 6Xx, 6Yx, 74x, 76x • 2597-CTO, 32x, 5Xx, 5Yx, 6Px, 6Qx • 2598-CTO, 43x, 52x, 53x, 55x, 6Jx, 6Kx, 6Lx, 6Sx, 6Tx, 6Vx, 73x, 75x, 7Ax, 7Vx, R2x, R3x • 2599-CTO, 53x • 4444-CTO, 32x, 33x, 3Mx, 3Px, 4Ex, 4Fx, 4Kx, 4Rx, 4Sx, 4Tx, 4Ux, 5Dx, 5Ex • 4447-CTO, 32x, 33x, 3Ex, 3Fx, 3Hx	60Y4815	**
16	SATA hard disk drive, 160 GB, 7,200 rpm • 0530-CTO, 32x, 52x, 62x, 63x, 68x, 69x, 6Lx, 6Mx • 0553-CTO, 42x, 43x, 57x, 58x, 6Px, 6Qx, 6Rx, 6Sx, 6Tx, 6Vx, 6Wx, 6Xx, 6Yx, 72x, 74x, 76x, 7Bx, 7Cx, 7Fx, 7Yx, 85x, 89x, R2x, R3x • 0585-CTO, 42x, 43x, 5Yx, 65x, 6Xx, 6Yx, 74x, 76x • 0591-CTO, 53x • 4403-CTO, 32x, 33x, 58x, 68x, 69x, 6Lx • 4404-CTO, 32x, 33x, 3Gx, 3Kx, 4Lx • 2550-CTO, 42x, 43x, 5Yx, 65x, 6Xx, 6Yx, 74x, 76x • 2597-CTO, 32x, 5Xx, 5Yx, 6Px, 6Qx • 2598-CTO, 43x, 52x, 53x, 55x, 6Jx, 6Kx, 6Lx, 6Sx, 6Tx, 6Vx, 73x, 75x, 7Ax, 7Vx, R2x, R3x • 2599-CTO, 53x • 4444-CTO, 32x, 33x, 3Mx, 3Px, 4Ex, 4Fx, 4Kx, 4Rx, 4Sx, 4Tx, 4Ux, 5Dx, 5Ex • 4447-CTO, 32x, 33x, 3Ex, 3Fx, 3Hx	75Y5121	**

Table 40. Parts list—Overall (continued)

No.	FRU (Overall)	FRU no.	CRU ID
16	SATA hard disk drive, 160 GB, 7,200 rpm, 7 mm height • 0530-CTO, 32x, 52x, 62x, 63x, 68x, 69x, 6Lx, 6Mx • 0553-CTO, 42x, 43x, 57x, 58x, 6Px, 6Qx, 6Rx, 6Sx, 6Tx, 6Vx, 6Wx, 6Xx, 6Yx, 72x, 74x, 76x, 7Bx, 7Cx, 7Fx, 7Yx, 85x, 89x, R2x, R3x • 0585-CTO, 42x, 43x, 5Yx, 65x, 6Xx, 6Yx, 74x, 76x • 0591-CTO, 53x • 4403-CTO, 32x, 33x, 58x, 68x, 69x, 6Lx • 4404-CTO, 32x, 33x, 3Gx, 3Kx, 4Lx • 2550-CTO, 42x, 43x, 5Yx, 65x, 6Xx, 6Yx, 74x, 76x • 2597-CTO, 32x, 5Xx, 5Yx, 6Px, 6Qx • 2598-CTO, 43x, 52x, 53x, 55x, 6Jx, 6Kx, 6Lx, 6Sx, 6Tx, 6Vx, 73x, 75x, 7Ax, 7Vx, R2x, R3x • 2599-CTO, 53x • 4444-CTO, 32x, 33x, 3Mx, 3Px, 4Ex, 4Fx, 4Kx, 4Rx, 4Sx, 4Tx, 4Ux, 5Dx, 5Ex • 4447-CTO, 32x, 33x, 3Ex, 3Fx, 3Hx	75Y5137	**
16	SATA hard disk drive, 250 GB, 7,200 rpm • 0530-CTO • 0553-CTO, 7Ax • 0585-CTO, 69x, 6Gx • 0591-CTO • 4403-CTO • 4404-CTO • 2550-CTO • 2597-CTO, 6Mx • 2598-CTO, 6Zx • 2599-CTO • 4444-CTO • 4447-CTO	60Y4813	**
16	SATA hard disk drive, 250 GB, 7,200 rpm • 0530-CTO • 0553-CTO, 7Ax • 0585-CTO, 69x, 6Gx • 0591-CTO • 4403-CTO • 4404-CTO • 2550-CTO • 2597-CTO, 6Mx • 2598-CTO, 6Zx • 2599-CTO • 4444-CTO • 4447-CTO	60Y4823	**
16	SATA hard disk drive, 250 GB, 7,200 rpm, 7 mm height • 0530-CTO • 0553-CTO, 7Ax • 0585-CTO, 69x, 6Gx • 0591-CTO • 4403-CTO • 4404-CTO • 2550-CTO • 2597-CTO, 6Mx • 2598-CTO, 6Zx • 2599-CTO • 4444-CTO • 4447-CTO	75Y5141	**

Table 40. Parts list—Overall (continued)

No.	FRU (Overall)	FRU no.	CRU ID
16	SATA hard disk drive, 320 GB, 7,200 rpm • 2842-CTO, 43x, 4Gx, 5Mx, 5Sx, 5Tx, C7x, C8x, C9x, CAx, CBx, DDx, DFx, F8x, F9x, FJx, FKx, FLx, GLx, GMx, GNx, GPx, GYx, GZx, H2x, H3x, H4x, H5x, HFx, HGx, HHx, HYx, HZx, J2x, J3x, J4x • 2847-CTO, 9Vx, 9Wx, 9Xx, 9Yx, 9Zx, A2x, A3x, AGx, AHx, AJx, AKx, ANx • 2873-CTO • 2874-CTO, 68x, 6Bx, 7Yx • 2875-CTO • 2931-CTO	60Y4739	**
16	SATA hard disk drive, 320 GB, 7,200 rpm • 2842-CTO, 43x, 4Gx, 5Mx, 5Sx, 5Tx, C7x, C8x, C9x, CAx, CBx, DDx, DFx, F8x, F9x, FJx, FKx, FLx, GLx, GMx, GNx, GPx, GYx, GZx, H2x, H3x, H4x, H5x, HFx, HGx, HHx, HYx, HZx, J2x, J3x, J4x • 2847-CTO, 9Vx, 9Wx, 9Xx, 9Yx, 9Zx, A2x, A3x, AGx, AHx, AJx, AKx, ANx • 2873-CTO • 2874-CTO, 68x, 6Bx, 7Yx • 2875-CTO • 2931-CTO	60Y4737	**
16	SATA hard disk drive, 320 GB, 7,200 rpm • 2842-CTO, 43x, 4Gx, 5Mx, 5Sx, 5Tx, C7x, C8x, C9x, CAx, CBx, DDx, DFx, F8x, F9x, FJx, FKx, FLx, GLx, GMx, GNx, GPx, GYx, GZx, H2x, H3x, H4x, H5x, HFx, HGx, HHx, HYx, HZx, J2x, J3x, J4x • 2847-CTO, 9Vx, 9Wx, 9Xx, 9Yx, 9Zx, A2x, A3x, AGx, AHx, AJx, AKx, ANx • 2873-CTO • 2874-CTO, 68x, 6Bx, 7Yx • 2875-CTO • 2931-CTO • 0530-CTO, 59x, 5Ax, 5Bx, 5Lx, 5Nx, 5Px, 5Qx, 5Rx, 5Sx, 5Tx, 5Ux, 5Xx, 64x, 65x, 66x, 67x, 6Ex, 6Fx, 6Gx, 6Hx, 6Jx, 6Kx, 6Nx • 0553-CTO, 22x, 25x, 33x, 35x, 36x, 44x, 52x, 53x, 56x, 59x, 5Ex, 5Qx, 5Zx, 62x, 63x, 64x, 65x, 66x, 67x, 68x, 69x, 6Cx, 6Dx, 6Ux, 6Zx, 73x, 7Kx, 7Rx, 7Tx, 7Vx, 7Wx, 7Xx, 7Zx, 83x, 84x, 8Ax, 8Bx, 8Cx • 0585-CTO, 44x, 55x, 56x, 5Bx, 5Dx, 5Fx, 5Hx, 5Kx, 5Mx, 5Px, 5Rx, 5Tx, 5Vx, 66x, 68x, 6Ax, 6Bx, 6Zx, 77x • 0591-CTO • 4403-CTO, 34x, 36x, 37x, 38x, 39x, 3Bx, 3Cx, 3Dx, 3Ex, 3Fx, 3Gx, 3Hx, 3Jx, 3Kx, 3Lx, 3Mx, 3Nx, 3Px, 3Qx, 3Rx, 3Sx, 3Tx, 3Ux, 3Vx, 3Wx, 3Xx, 3Yx, 46x, 47x, 48x, 4Bx, 4Cx, 4Dx, 4Ex, 4Fx, 4Gx, 4Hx, 4Jx, 4Ux, 4Vx, 4Wx, 53x, 54x, 55x, 56x, 57x, 5Cx, 5Ex, 5Fx, 5Gx, 5Jx, 5Kx, 5Px, 5Qx, 5Rx, 5Sx, 5Tx, 5Ux, 5Wx, 5Xx, 5Yx, 5Zx, 62x, 63x, 64x, 65x, 66x, 6Bx, 6Cx, 6Hx, 74x, 75x, 76x, 77x • 4404-CTO, 34x, 35x, 36x, 37x, 38x, 39x, 3Ax, 3Bx, 3Cx, 3Dx, 3Ex, 3Fx, 3Hx, 3Jx, 3Lx, 3Mx, 3Nx, 3Px, 3Qx, 3Yx, 3Zx, 42x, 43x, 44x, 45x, 47x, 48x, 49x, 4Ax, 4Bx, 4Cx, 4Dx, 4Ex, 4Fx, 4Gx, 4Hx, 4Jx, 4Kx, 4Mx, 4Nx, 4Px • 2550-CTO, 44x, 54x, 55x, 5Bx, 5Dx, 5Fx, 5Hx, 5Kx, 5Mx, 5Px, 5Rx, 5Tx, 5Vx, 62x, 6Nx, 6Ux • 2597-CTO, 58x, 59x, 5Ax, 5Gx, 5Hx, 5Jx, 5Kx, 5Lx, 5Mx, 5Nx, 5Px, 5Qx, 5Zx, 62x, 63x, 64x, 6Ax, 6Bx, 6Cx, 6Dx • 2598-CTO, 22x, 25x, 33x, 34x, 35x, 44x, 58x, 5Hx, 5Jx, 5Kx, 5Lx, 5Px, 5Qx, 5Rx, 5Sx, 5Tx, 67x, 68x, 69x, 6Ax, 6Bx, 6Cx, 6Dx, 6Ex, 6Fx, 6Nx, 6Ux, 6Wx, 6Yx, 76x, 77x, 78x, 7Bx, 7Cx, 7Dx, 7Qx, 7Rx, 7Tx, 7Ux, 82x, 83x, 84x, 85x • 2599-CTO • 4444-CTO, 34x, 36x, 37x, 38x, 39x, 3Ax, 3Bx, 3Hx, 3Jx, 3Kx, 3Nx, 3Qx, 3Rx, 3Ux, 43x, 44x, 49x, 4Ax, 4Bx, 4Cx, 4Dx, 4Gx, 4Jx, 4Lx, 4Mx, 4Vx, 4Yx, 52x, 5Bx, 5Cx • 4447-CTO, 34x, 35x, 36x, 37x, 38x, 39x, 3Ax, 3Bx, 3Cx, 3Dx, 3Gx	60Y4809	**

Table 40. Parts list—Overall (continued)

No.	FRU (Overall)	FRU no.	CRU ID
16	SATA hard disk drive, 320 GB, 7,200 rpm • 2842-CTO, 43x, 4Gx, 5Mx, 5Sx, 5Tx, C7x, C8x, C9x, CAx, CBx, DDx, DFx, F8x, F9x, FJx, FKx, FLx, GLx, GMx, GNx, GPx, GYx, GZx, H2x, H3x, H4x, H5x, HFx, HGx, HHx, HYx, HZx, J2x, J3x, J4x • 2847-CTO, 9Vx, 9Wx, 9Xx, 9Yx, 9Zx, A2x, A3x, AGx, AHx, AJx, AKx, ANx • 2873-CTO • 2874-CTO, 68x, 6Bx, 7Yx • 2875-CTO • 2931-CTO • 0530-CTO, 59x, 5Ax, 5Bx, 5Lx, 5Nx, 5Px, 5Qx, 5Rx, 5Sx, 5Tx, 5Ux, 5Xx, 64x, 65x, 66x, 67x, 6Ex, 6Fx, 6Gx, 6Hx, 6Jx, 6Kx, 6Nx • 0553-CTO, 22x, 25x, 33x, 35x, 36x, 44x, 52x, 53x, 56x, 59x, 5Ex, 5Qx, 5Zx, 62x, 63x, 64x, 65x, 66x, 67x, 68x, 69x, 6Cx, 6Dx, 6Ux, 6Zx, 73x, 7Kx, 7Rx, 7Tx, 7Vx, 7Wx, 7Xx, 7Zx, 83x, 84x, 8Ax, 8Bx, 8Cx • 0585-CTO, 44x, 55x, 56x, 5Bx, 5Dx, 5Fx, 5Hx, 5Kx, 5Mx, 5Px, 5Rx, 5Tx, 5Vx, 66x, 68x, 6Ax, 6Bx, 6Zx, 77x • 0591-CTO • 4403-CTO, 34x, 36x, 37x, 38x, 39x, 3Bx, 3Cx, 3Dx, 3Ex, 3Fx, 3Gx, 3Hx, 3Jx, 3Kx, 3Lx, 3Mx, 3Nx, 3Px, 3Qx, 3Rx, 3Sx, 3Tx, 3Ux, 3Vx, 3Wx, 3Xx, 3Yx, 46x, 47x, 48x, 4Bx, 4Cx, 4Dx, 4Ex, 4Fx, 4Gx, 4Hx, 4Jx, 4Ux, 4Vx, 4Wx, 53x, 54x, 55x, 56x, 57x, 5Cx, 5Ex, 5Fx, 5Gx, 5Jx, 5Kx, 5Px, 5Qx, 5Rx, 5Sx, 5Tx, 5Ux, 5Wx, 5Xx, 5Yx, 5Zx, 62x, 63x, 64x, 65x, 66x, 6Bx, 6Cx, 6Hx, 74x, 75x, 76x, 77x • 4404-CTO, 34x, 35x, 36x, 37x, 38x, 39x, 3Ax, 3Bx, 3Cx, 3Dx, 3Ex, 3Fx, 3Hx, 3Jx, 3Lx, 3Mx, 3Nx, 3Px, 3Qx, 3Yx, 3Zx, 42x, 43x, 44x, 45x, 47x, 48x, 49x, 4Ax, 4Bx, 4Cx, 4Dx, 4Ex, 4Fx, 4Gx, 4Hx, 4Jx, 4Kx, 4Mx, 4Nx, 4Px • 2550-CTO, 44x, 54x, 55x, 5Bx, 5Dx, 5Fx, 5Hx, 5Kx, 5Mx, 5Px, 5Rx, 5Tx, 5Vx, 62x, 6Nx, 6Ux • 2597-CTO, 58x, 59x, 5Ax, 5Gx, 5Hx, 5Jx, 5Kx, 5Lx, 5Mx, 5Nx, 5Px, 5Qx, 5Zx, 62x, 63x, 64x, 6Ax, 6Bx, 6Cx, 6Dx • 2598-CTO, 22x, 25x, 33x, 34x, 35x, 44x, 58x, 5Hx, 5Jx, 5Kx, 5Lx, 5Px, 5Qx, 5Rx, 5Sx, 5Tx, 67x, 68x, 69x, 6Ax, 6Bx, 6Cx, 6Dx, 6Ex, 6Fx, 6Nx, 6Ux, 6Wx, 6Yx, 76x, 77x, 78x, 7Bx, 7Cx, 7Dx, 7Qx, 7Rx, 7Tx, 7Ux, 82x, 83x, 84x, 85x • 2599-CTO • 4444-CTO, 34x, 36x, 37x, 38x, 39x, 3Ax, 3Bx, 3Hx, 3Jx, 3Kx, 3Nx, 3Qx, 3Rx, 3Ux, 43x, 44x, 49x, 4Ax, 4Bx, 4Cx, 4Dx, 4Gx, 4Jx, 4Lx, 4Mx, 4Vx, 4Yx, 52x, 5Bx, 5Cx • 4447-CTO, 34x, 35x, 36x, 37x, 38x, 39x, 3Ax, 3Bx, 3Cx, 3Dx, 3Gx	60Y4819	**

Table 40. Parts list—Overall (continued)

No.	FRU (Overall)	FRU no.	CRU ID
16	SATA hard disk drive, 320 GB, 7,200 rpm • 0530-CTO, 59x, 5Ax, 5Bx, 5Lx, 5Nx, 5Px, 5Qx, 5Rx, 5Sx, 5Tx, 5Ux, 5Xx, 64x, 65x, 66x, 67x, 6Ex, 6Fx, 6Gx, 6Hx, 6Jx, 6Kx, 6Nx • 0553-CTO, 22x, 25x, 33x, 35x, 36x, 44x, 52x, 53x, 56x, 59x, 5Ex, 5Qx, 5Zx, 62x, 63x, 64x, 65x, 66x, 67x, 68x, 69x, 6Cx, 6Dx, 6Ux, 6Zx, 73x, 7Kx, 7Rx, 7Tx, 7Vx, 7Wx, 7Xx, 7Zx, 83x, 84x, 8Ax, 8Bx, 8Cx • 0585-CTO, 44x, 55x, 56x, 5Bx, 5Dx, 5Fx, 5Hx, 5Kx, 5Mx, 5Px, 5Rx, 5Tx, 5Vx, 66x, 68x, 6Ax, 6Bx, 6Zx, 77x • 0591-CTO • 4403-CTO, 34x, 36x, 37x, 38x, 39x, 3Bx, 3Cx, 3Dx, 3Ex, 3Fx, 3Gx, 3Hx, 3Jx, 3Kx, 3Lx, 3Mx, 3Nx, 3Px, 3Qx, 3Rx, 3Sx, 3Tx, 3Ux, 3Vx, 3Wx, 3Xx, 3Yx, 46x, 47x, 48x, 4Bx, 4Cx, 4Dx, 4Ex, 4Fx, 4Gx, 4Hx, 4Jx, 4Ux, 4Vx, 4Wx, 53x, 54x, 55x, 56x, 57x, 5Cx, 5Ex, 5Fx, 5Gx, 5Jx, 5Kx, 5Px, 5Qx, 5Rx, 5Sx, 5Tx, 5Ux, 5Wx, 5Xx, 5Yx, 5Zx, 62x, 63x, 64x, 65x, 66x, 6Bx, 6Cx, 6Hx, 74x, 75x, 76x, 77x • 4404-CTO, 34x, 35x, 36x, 37x, 38x, 39x, 3Ax, 3Bx, 3Cx, 3Dx, 3Ex, 3Fx, 3Hx, 3Jx, 3Lx, 3Mx, 3Nx, 3Px, 3Qx, 3Yx, 3Zx, 42x, 43x, 44x, 45x, 47x, 48x, 49x, 4Ax, 4Bx, 4Cx, 4Dx, 4Ex, 4Fx, 4Gx, 4Hx, 4Jx, 4Kx, 4Mx, 4Nx, 4Px • 2550-CTO, 44x, 54x, 55x, 5Bx, 5Dx, 5Fx, 5Hx, 5Kx, 5Mx, 5Px, 5Rx, 5Tx, 5Vx, 62x, 6Nx, 6Ux • 2597-CTO, 58x, 59x, 5Ax, 5Gx, 5Hx, 5Jx, 5Kx, 5Lx, 5Mx, 5Nx, 5Px, 5Qx, 5Zx, 62x, 63x, 64x, 6Ax, 6Bx, 6Cx, 6Dx • 2598-CTO, 22x, 25x, 33x, 34x, 35x, 44x, 58x, 5Hx, 5Jx, 5Kx, 5Lx, 5Px, 5Qx, 5Rx, 5Sx, 5Tx, 67x, 68x, 69x, 6Ax, 6Bx, 6Cx, 6Dx, 6Ex, 6Fx, 6Nx, 6Ux, 6Wx, 6Yx, 76x, 77x, 78x, 7Bx, 7Cx, 7Dx, 7Qx, 7Rx, 7Tx, 7Ux, 82x, 83x, 84x, 85x • 2599-CTO • 4444-CTO, 34x, 36x, 37x, 38x, 39x, 3Ax, 3Bx, 3Hx, 3Jx, 3Kx, 3Nx, 3Qx, 3Rx, 3Ux, 43x, 44x, 49x, 4Ax, 4Bx, 4Cx, 4Dx, 4Gx, 4Jx, 4Lx, 4Mx, 4Vx, 4Yx, 52x, 5Bx, 5Cx • 4447-CTO, 34x, 35x, 36x, 37x, 38x, 39x, 3Ax, 3Bx, 3Cx, 3Dx, 3Gx	75Y5123	**
16	SATA hard disk drive, 320 GB, 7,200 rpm, 7 mm height • 0530-CTO, 59x, 5Ax, 5Bx, 5Lx, 5Nx, 5Px, 5Qx, 5Rx, 5Sx, 5Tx, 5Ux, 5Xx, 64x, 65x, 66x, 67x, 6Ex, 6Fx, 6Gx, 6Hx, 6Jx, 6Kx, 6Nx • 0553-CTO, 22x, 25x, 33x, 35x, 36x, 44x, 52x, 53x, 56x, 59x, 5Ex, 5Qx, 5Zx, 62x, 63x, 64x, 65x, 66x, 67x, 68x, 69x, 6Cx, 6Dx, 6Ux, 6Zx, 73x, 7Kx, 7Rx, 7Tx, 7Vx, 7Wx, 7Xx, 7Zx, 83x, 84x, 8Ax, 8Bx, 8Cx • 0585-CTO, 44x, 55x, 56x, 5Bx, 5Dx, 5Fx, 5Hx, 5Kx, 5Mx, 5Px, 5Rx, 5Tx, 5Vx, 66x, 68x, 6Ax, 6Bx, 6Zx, 77x • 0591-CTO • 4403-CTO, 34x, 36x, 37x, 38x, 39x, 3Bx, 3Cx, 3Dx, 3Ex, 3Fx, 3Gx, 3Hx, 3Jx, 3Kx, 3Lx, 3Mx, 3Nx, 3Px, 3Qx, 3Rx, 3Sx, 3Tx, 3Ux, 3Vx, 3Wx, 3Xx, 3Yx, 46x, 47x, 48x, 4Bx, 4Cx, 4Dx, 4Ex, 4Fx, 4Gx, 4Hx, 4Jx, 4Ux, 4Vx, 4Wx, 53x, 54x, 55x, 56x, 57x, 5Cx, 5Ex, 5Fx, 5Gx, 5Jx, 5Kx, 5Px, 5Qx, 5Rx, 5Sx, 5Tx, 5Ux, 5Wx, 5Xx, 5Yx, 5Zx, 62x, 63x, 64x, 65x, 66x, 6Bx, 6Cx, 6Hx, 74x, 75x, 76x, 77x • 4404-CTO, 34x, 35x, 36x, 37x, 38x, 39x, 3Ax, 3Bx, 3Cx, 3Dx, 3Ex, 3Fx, 3Hx, 3Jx, 3Lx, 3Mx, 3Nx, 3Px, 3Qx, 3Yx, 3Zx, 42x, 43x, 44x, 45x, 47x, 48x, 49x, 4Ax, 4Bx, 4Cx, 4Dx, 4Ex, 4Fx, 4Gx, 4Hx, 4Jx, 4Kx, 4Mx, 4Nx, 4Px • 2550-CTO, 44x, 54x, 55x, 5Bx, 5Dx, 5Fx, 5Hx, 5Kx, 5Mx, 5Px, 5Rx, 5Tx, 5Vx, 62x, 6Nx, 6Ux • 2597-CTO, 58x, 59x, 5Ax, 5Gx, 5Hx, 5Jx, 5Kx, 5Lx, 5Mx, 5Nx, 5Px, 5Qx, 5Zx, 62x, 63x, 64x, 6Ax, 6Bx, 6Cx, 6Dx • 2598-CTO, 22x, 25x, 33x, 34x, 35x, 44x, 58x, 5Hx, 5Jx, 5Kx, 5Lx, 5Px, 5Qx, 5Rx, 5Sx, 5Tx, 67x, 68x, 69x, 6Ax, 6Bx, 6Cx, 6Dx, 6Ex, 6Fx, 6Nx, 6Ux, 6Wx, 6Yx, 76x, 77x, 78x, 7Bx, 7Cx, 7Dx, 7Qx, 7Rx, 7Tx, 7Ux, 82x, 83x, 84x, 85x • 2599-CTO • 4444-CTO, 34x, 36x, 37x, 38x, 39x, 3Ax, 3Bx, 3Hx, 3Jx, 3Kx, 3Nx, 3Qx, 3Rx, 3Ux, 43x, 44x, 49x, 4Ax, 4Bx, 4Cx, 4Dx, 4Gx, 4Jx, 4Lx, 4Mx, 4Vx, 4Yx, 52x, 5Bx, 5Cx • 4447-CTO, 34x, 35x, 36x, 37x, 38x, 39x, 3Ax, 3Bx, 3Cx, 3Dx, 3Gx	75Y5139	**

Table 40. Parts list—Overall (continued)

No.	FRU (Overall)	FRU no.	CRU ID
16	SATA hard disk drive, 500 GB, 7,200 rpm • 0616-CTO, 29x • 2842-CTO, K4x, KCx, KMx, KQx, KUx, KXx • 2847-CTO, D2x, DJx • 2873-CTO • 2874-CTO • 2875-CTO • 2931-CTO • 5072-CTO • 0530-CTO • 0553-CTO, 77x, 7Sx, 7Ux • 0585-CTO, 6Cx, 6Dx, 6Ex, 6Fx, 6Hx • 0591-CTO • 4403-CTO, 4Px, 5Lx, 5Mx, 5Vx, 6Ax, 6Ux, 6Vx, 6Wx, 6Xx, 6Yx, 6Zx • 4404-CTO, 3Rx, 3Sx, 3Tx, 3Ux, 3Vx, 3Wx, 4Wx, 4Xx, 4Yx, 4Zx • 2550-CTO • 2597-CTO • 2598-CTO, 6Xx • 2599-CTO • 4444-CTO, 3Sx, 3Tx, 4Hx, 4Zx, 53x, 54x, 55x, 56x • 4447-CTO	60Y4811	**
16	SATA hard disk drive, 500 GB, 7,200 rpm • 0616-CTO, 29x • 2842-CTO, K4x, KCx, KMx, KQx, KUx, KXx • 2847-CTO, D2x, DJx • 2873-CTO • 2874-CTO • 2875-CTO • 2931-CTO • 5072-CTO • 0530-CTO • 0553-CTO, 77x, 7Sx, 7Ux • 0585-CTO, 6Cx, 6Dx, 6Ex, 6Fx, 6Hx • 0591-CTO • 4403-CTO, 4Px, 5Lx, 5Mx, 5Vx, 6Ax, 6Ux, 6Vx, 6Wx, 6Xx, 6Yx, 6Zx • 4404-CTO, 3Rx, 3Sx, 3Tx, 3Ux, 3Vx, 3Wx, 4Wx, 4Xx, 4Yx, 4Zx • 2550-CTO • 2597-CTO • 2598-CTO, 6Xx • 2599-CTO • 4444-CTO, 3Sx, 3Tx, 4Hx, 4Zx, 53x, 54x, 55x, 56x • 4447-CTO	60Y4821	**
16	SATA hard disk drive, 500 GB, 7,200 rpm • 0530-CTO • 0553-CTO, 77x, 7Sx, 7Ux • 0585-CTO, 6Cx, 6Dx, 6Ex, 6Fx, 6Hx • 0591-CTO • 4403-CTO, 4Px, 5Lx, 5Mx, 5Vx, 6Ax, 6Ux, 6Vx, 6Wx, 6Xx, 6Yx, 6Zx • 4404-CTO, 3Rx, 3Sx, 3Tx, 3Ux, 3Vx, 3Wx, 4Wx, 4Xx, 4Yx, 4Zx • 2550-CTO • 2597-CTO • 2598-CTO, 6Xx • 2599-CTO • 4444-CTO, 3Sx, 3Tx, 4Hx, 4Zx, 53x, 54x, 55x, 56x • 4447-CTO	75Y5125	**

Table 40. Parts list—Overall (continued)

No.	FRU (Overall)	FRU no.	CRU ID
16	SATA 2.5" solid state drive, 128 GB, 7 mm height • 0530-CTO • 0553-CTO • 0585-CTO • 0591-CTO • 4403-CTO • 4404-CTO • 2550-CTO • 2597-CTO • 2598-CTO • 2599-CTO • 4444-CTO • 4447-CTO	04W1267	**
17	Qualcomm® UNDP1 - Wireless WAN card • 2842-CTO • 2847-CTO, 6Hx • 2873-CTO • 2875-CTO • 2931-CTO	42T0961	**
17	Ericsson F3507g USA - Wireless WAN card • 2842-CTO, 22x • 2847-CTO, 22x, 23x, 2Nx, 9Zx • 2873-CTO, 22x • 2931-CTO, 22x, 23x, 24x	43Y6537	**
17	Ericsson F3507g Other - Wireless WAN card • 2842-CTO, 26x, 28x, 2Bx, 2Dx, 3Tx, 3Vx, 8Rx, AHx, AKx, B8x, BBx, DHx, DKx, FMx, FNx, FPx, FQx, FSx, FTx, FUx, FVx, G6x • 2847-CTO, 3Ex, 3Px, 43x, 55x, 57x, 59x, 5Bx, 69x, 6Bx, 6Dx, 6Fx, 6Kx, 85x, 88x, 94x, 96x, 98x, BDx, BFx, BHx, BKx, Q4x, Q6x, Q8x, QAx, QCx • 2873-CTO • 2931-CTO	43Y6513	**
17	Ericsson F3507g Other - Wireless WAN card • 2842-CTO • 2847-CTO • 2873-CTO • 2931-CTO	60Y3181	**
17	Ericsson F3507g Other - Wireless WAN card • 2842-CTO • 2847-CTO • 2873-CTO • 2931-CTO	60Y3179	**
17	Ericsson F3507g Other - Wireless WAN card for Malaysia • 2842-CTO • 2847-CTO • 2873-CTO • 2931-CTO	60Y3265	**

Table 40. Parts list—Overall (continued)

No.	FRU (Overall)	FRU no.	CRU ID
17	Integrated Mobile Broadband (Gobi 2000 3G with GPS) • 0530-CTO • 0553-CTO • 0585-CTO • 0591-CTO • 4403-CTO • 4404-CTO • 2550-CTO • 2597-CTO • 2598-CTO • 2599-CTO • 4444-CTO • 4447-CTO	60Y3259	**
17	Integrated Mobile Broadband (Gobi 2000 3G with GPS) • 0530-CTO, 54x, 56x, 63x, 6Ex, 6Fx, 6Gx • 0553-CTO, 24x, 35x, 36x, 54x, 56x, 57x, 59x, 5Cx, 5Fx, 5Lx, 5Px, 5Qx, 6Hx, 6Jx, 6Mx, 6Nx, 6Rx, 6Tx, 6Wx, 73x, 77x, 7Fx, 7Jx, 7Kx, 83x, 84x, 87x • 0585-CTO, 54x, 55x, 56x, 64x, 65x, 66x, 6Px, 6Qx • 0591-CTO • 4403-CTO, 4Mx, 6Kx • 4404-CTO, 3Hx • 2550-CTO • 2597-CTO, 53x, 55x, 5Yx, 69x • 2598-CTO, 24x, 34x, 35x, 53x, 5Ax, 5Bx, 5Cx, 5Ex, 5Gx, 5Jx, 5Lx, 5Nx, 5Qx, 5Sx, 65x, 66x, 6Lx, 6Rx, 6Vx, 6Xx, 75x, 77x, 78x, 7Ax, 7Cx, 7Fx, 7Tx, 7Ux, 7Zx • 2599-CTO • 4444-CTO, 3Nx, 4Qx, 57x • 4447-CTO, 3Gx	60Y3263	**
17	Integrated Mobile Broadband (Gobi 2000 3G with GPS) • 0530-CTO, 54x, 56x, 63x, 6Ex, 6Fx, 6Gx • 0553-CTO, 24x, 35x, 36x, 54x, 56x, 57x, 59x, 5Cx, 5Fx, 5Lx, 5Px, 5Qx, 6Hx, 6Jx, 6Mx, 6Nx, 6Rx, 6Tx, 6Wx, 73x, 77x, 7Fx, 7Jx, 7Kx, 83x, 84x, 87x • 0585-CTO, 54x, 55x, 56x, 64x, 65x, 66x, 6Px, 6Qx • 0591-CTO • 4403-CTO, 4Mx, 6Kx • 4404-CTO, 3Hx • 2550-CTO • 2597-CTO, 53x, 55x, 5Yx, 69x • 2598-CTO, 24x, 34x, 35x, 53x, 5Ax, 5Bx, 5Cx, 5Ex, 5Gx, 5Jx, 5Lx, 5Nx, 5Qx, 5Sx, 65x, 66x, 6Lx, 6Rx, 6Vx, 6Xx, 75x, 77x, 78x, 7Ax, 7Cx, 7Fx, 7Tx, 7Ux, 7Zx • 2599-CTO • 4444-CTO, 3Nx, 4Qx, 57x • 4447-CTO, 3Gx	60Y3183	**

Table 40. Parts list—Overall (continued)

No.	FRU (Overall)	FRU no.	CRU ID
18	Thermal module with fan (integrated) • 0616-CTO, 22x, 2Cx, 2Dx • 2842-CTO, 22x, 23x, 24x, 29x, 2Ex, 33x, 34x, 35x, 36x, 37x, 39x, 3Bx, 3Fx, 3Gx, 3Hx, 3Px, 3Qx, 3Rx, 3Sx, 3Tx, 3Ux, 3Vx, 42x, 43x, 44x, 45x, 46x, 48x, 49x, 4Ax, 4Bx, 4Cx, 4Dx, 4Ex, 4Fx, 4Gx, 4Hx, 4Jx, 4Kx, 4Lx, 4Ux, 4Vx, 4Wx, 4Xx, 4Yx, 4Zx, 52x, 5Ex, 5Fx, 5Gx, 5Hx, 5Jx, 5Kx, 5Nx, 5Ux, 5Vx, 5Wx, 5Xx, 5Yx, 5Zx, 62x, 63x, 66x, 67x, 68x, 69x, 6Ax, 6Bx, 6Cx, 6Dx, 6Ex, 6Fx, 6Gx, 6Hx, 6Jx, 6Kx, 6Lx, 6Mx, 6Nx, 7Bx, 7Cx, 7Dx, 7Ex, 7Fx, 7Gx, 7Hx, 7Px, 7Qx, 7Rx, 7Sx, 7Tx, 7Ux, 7Vx, 7Wx, 7Xx, 7Yx, 7Zx, 82x, 83x, 84x, 85x, 86x, 87x, 8Ex, 8Rx, 8Sx, 8Tx, 8Ux, 8Vx, 8Wx, 8Xx, 8Yx, 8Zx, 92x, 93x, 94x, 95x, 96x, 97x, 98x, 99x, 9Ax, 9Bx, 9Cx, 9Dx, 9Ex, 9Fx, 9Gx, 9Hx, AAx, ABx, ACx, AGx, AHx, AJx, AKx, ALx, AMx, ANx, APx, AQx, ARx, ASx, ATx, AUx, AVx, AWx, AXx, AYx, AZx, B2x, B3x, B7x, B8x, BCx, BDx, BEx, BFx, BGx, BHx, BJx, BNx, BPx, BQx, BRx, BSx, BTx, BVx, BWx, BXx, C3x, C4x, C7x, C8x, C9x, CAx, CBx, CCx, CDx, CEx, CFx, CGx, CHx, CMx, CNx, CPx, CQx, CRx, CSx, CXx, CYx, CZx, D9x, DAx, DBx, DEx, DGx, DHx, DJx, DKx, DMx, DNx, DPx, DQx, DRx, DSx, DTx, DUx, DVx, DWx, DXx, DYx, E2x, E3x, E4x, E5x, E6x, E7x, E8x, E9x, EAx, EBx, ECx, EDx, EEx, EFx, EGx, EHx, EJx, EKx, ELx, F4x, F7x, F8x, F9x, FAx, FBx, FCx, FDx, FEx, FPx, FQx, FTx, FVx, FWx, FXx, FYx, FZx, G3x, G5x, G8x, GDx, GFx, GGx, GHx, GJx, GKx, GMx, GPx, GQx, GRx, GSx, GTx, GVx, GWx, GXx, GYx, GZx, H6x, H7x, H8x, H9x, HAx, HBx, HCx, HDx, HEx, HFx, HJx, HKx, HLx, HMx, HNx, HRx, HUx, HVx, HXx, HYx, HZx, J2x, J3x, J4x, JDx, JEx, JHx, JKx, JLx, JMx, JNx, JPx, JQx, JRx, JSx, JTx, JUx, JVx, JXx, JYx, JZx, K2x, K3x, K4x, K5x, K6x, K7x, K8x, K9x, KAx, KBx, KCx, KDx, KNx, KPx, KQx, KRx, KVx, KWx, KXx, KYx, KZx, L2x, L3x, L4x, L5x, L6x, L7x • 2847-CTO, 22x, 24x, 25x, 26x, 27x, 28x, 29x, 2Ax, 2Bx, 2Cx, 2Dx, 2Ex, 2Fx, 2Gx, 2Hx, 2Jx, 2Kx, 2Lx, 2Mx, 2Nx, 2Px, 2Qx, 2Rx, 2Sx, 2Tx, 2Ux, 2Vx, 2Wx, 2Xx, 2Yx, 2Zx, 33x, 34x, 37x, 38x, 39x, 3Dx, 3Ex, 3Kx, 3Lx, 3Nx, 3Px, 3Qx, 3Vx, 3Wx, 3Xx, 3Yx, 3Zx, 42x, 43x, 45x, 46x, 48x, 49x, 4Ax, 4Ex, 4Fx, 4Gx, 4Hx, 4Jx, 4Nx, 4Px, 4Qx, 4Rx, 4Sx, 4Tx, 4Ux, 4Vx, 4Xx, 4Yx, 4Zx, 52x, 53x, 54x, 55x, 56x, 57x, 58x, 59x, 5Ex, 5Hx, 5Jx, 5Kx, 5Lx, 5Mx, 5Nx, 5Px, 5Qx, 5Rx, 5Sx, 5Tx, 68x, 69x, 6Ax, 6Bx, 6Cx, 6Dx, 6Ex, 6Fx, 6Gx, 6Hx, 6Lx, 6Mx, 6Rx, 6Ux, 6Vx, 6Wx, 6Yx, 72x, 73x, 74x, 75x, 76x, 77x, 78x, 79x, 7Bx, 7Ex, 7Fx, 7Jx, 7Kx, 7Lx, 7Mx, 7Nx, 7Px, 7Qx, 7Tx, 7Ux, 7Vx, 7Wx, 7Xx, 7Yx, 84x, 85x, 89x, 8Ax, 8Bx, 8Cx, 8Dx, 8Ex, 8Hx, 8Jx, 8Kx, 8Lx, 8Mx, 8Nx, 8Px, 8Qx, 8Rx, 8Sx, 8Tx, 93x, 94x, 95x, 96x, 97x, 98x, 99x, 9Cx, 9Dx, 9Gx, 9Jx, 9Kx, 9Lx, 9Mx, 9Nx, 9Qx, 9Ux, 9Vx, 9Wx, 9Xx, 9Yx, 9Zx, A2x, A5x, A6x, A7x, A9x, ACx, AEx, AFx, AHx, AKx, ALx, AMx, ANx, APx, AQx, ARx, ASx, ATx, AUx, AVx, AWx, AXx, AYx, AZx, B2x, B3x, B4x, BBx, BCx, BDx, BEx, BFx, BGx, BHx, BJx, BKx, BMx, BNx, BPx, BQx, BRx, BSx, BTx, BUx, BVx, BWx, BXx, BYx, C5x, C6x, CGx, CHx, CLx, CMx, CQx, CSx, CUx, CVx, CWx, CXx, CZx, D2x, D3x, D4x, D9x, DAx, DBx, DCx, DDx, DEx, DFx, DGx, DHx, DJx, DKx, DLx, Q3x, Q4x, Q5x, Q6x, Q7x, Q8x, Q9x, QAx, QDx, QEx, QFx, QGx, QHx, QJx, R2x, R3x • 2873-CTO, 22x, 32x • 2874-all • 2875-all • 2931-CTO, 23x, 24x, 25x • 5072-CTO	60Y4179	N

Table 40. Parts list—Overall (continued)

No.	FRU (Overall)	FRU no.	CRU ID
18	Thermal module with fan (discrete) • 0616-CTO, 25x, 26x, 27x, 28x, 29x • 2842-CTO, 25x, 26x, 27x, 28x, 2Ax, 2Bx, 2Cx, 2Dx, 3Dx, 47x, 4Mx, 4Nx, 4Px, 4Qx, 4Rx, 4Sx, 4Tx, 53x, 54x, 55x, 56x, 57x, 58x, 59x, 5Ax, 5Bx, 5Cx, 5Dx, 5Lx, 5Mx, 5Px, 5Qx, 5Rx, 5Sx, 5Tx, 64x, 65x, 6Px, 6Qx, 6Rx, 6Sx, 6Tx, 6Ux, 6Vx, 6Wx, 6Xx, 6Yx, 6Zx, 72x, 73x, 74x, 75x, 76x, 77x, 78x, 7Jx, 88x, 89x, 8Ax, 8Bx, 8Cx, 8Dx, 8Fx, 8Gx, 8Hx, 8Jx, 8Kx, 8Lx, 8Mx, 8Nx, 9Jx, 9Kx, 9Lx, 9Mx, 9Nx, 9Px, 9Qx, 9Rx, 9Sx, 9Tx, 9Ux, 9Vx, 9Wx, 9Xx, 9Yx, 9Zx, A2x, A3x, A4x, A5x, A6x, A7x, A8x, A9x, ADx, AEx, AFx, B4x, B5x, B6x, B9x, BAx, BBx, BKx, BMx, BUx, BYx, BZx, C2x, C5x, C6x, CJx, CKx, CLx, CUx, CVx, CWx, D2x, D3x, D4x, D5x, D6x, D7x, D8x, DCx, DDx, DFx, DLx, DZx, EMx, ENx, EPx, EQx, ERx, ESx, ETx, EUx, EVx, EWx, EXx, EYx, EZx, F2x, F3x, F5x, F6x, FFx, FGx, FHx, FJx, FKx, FLx, FMx, FNx, FSx, FUx, G2x, G4x, G6x, G7x, G9x, GBx, GCx, GEx, GLx, GNx, GUx, H2x, H3x, H5x, HGx, HHx, HPx, HQx, HSx, HTx, HWx, J5x, J6x, J7x, J8x, J9x, JAx, JBx, JCx, JFx, JGx, JJx, JWx, KEx, KFx, KGx, KHx, KJx, KKx, KLx, KMx, KSx, KTx, KUx • 2847-CTO, 23x, 35x, 36x, 3Mx, 44x, 47x, 4Bx, 4Cx, 4Dx, 4Wx, 5Ax, 5Bx, 5Cx, 5Dx, 5Fx, 5Gx, 5Ux, 5Vx, 5Wx, 5Xx, 5Yx, 5Zx, 62x, 63x, 64x, 65x, 66x, 67x, 6Jx, 6Kx, 6Nx, 6Px, 6Qx, 6Sx, 6Tx, 6Xx, 6Zx, 7Ax, 7Cx, 7Dx, 7Rx, 7Sx, 7Zx, 82x, 83x, 86x, 87x, 88x, 8Fx, 8Gx, 8Ux, 8Vx, 8Wx, 8Xx, 8Yx, 8Zx, 92x, 9Ax, 9Bx, 9Ex, 9Fx, 9Hx, 9Px, 9Rx, 9Sx, 9Tx, A3x, A4x, A8x, AAx, ABx, ADx, AGx, AJx, B5x, B6x, B7x, B8x, B9x, BAx, BZx, C2x, C3x, C4x, C7x, C8x, C9x, CAx, CBx, CCx, CDx, CEx, CFx, CJx, CKx, CNx, CPx, CRx, CYx, D5x, D6x, D7x, D8x, Q2x, QBx, QCx, R4x, R5x, R6x, R7x, R8x, R9x, RAx, RBx, RCx, RDx, RFx, RGx, RHx, RJx, RKx, RLx, RMx, RNx, RPx, RQx, RRx, RSx, RTx, RUx, RVx, RWx, RXx • 2873-CTO, 33x • 2931-CTO, 22x, 26x, 27x, 28x, 29x, 2Ax, 2Bx • 5072-CTO	60Y4726	N
18	Thermal module with fan (discrete, 512 MB 14W) • 0616-CTO • 2842-CTO • 2874-CTO • 2931-CTO	04W0441	N

Table 40. Parts list—Overall (continued)

No.	FRU (Overall)	FRU no.	CRU ID
18	Thermal module with fan (integrated) for L412 and L512 • 0530-CTO, 22x, 32x, 52x, 53x, 54x, 55x, 56x, 57x, 59x, 5Ax, 5Bx, 5Cx, 5Dx, 5Ex, 5Fx, 5Gx, 5Jx, 5Kx, 5Lx, 5Mx, 5Nx, 5Px, 5Qx, 5Rx, 5Sx, 5Tx, 5Ux, 5Vx, 5Wx, 5Xx, 5Zx, 62x, 63x, 64x, 65x, 66x, 67x, 68x, 69x, 6Ax, 6Bx, 6Ex, 6Fx, 6Gx, 6Lx, 6Mx, 6Nx • 0553-CTO, 22x, 24x, 33x, 35x, 36x, 42x, 43x, 44x, 52x, 53x, 54x, 55x, 56x, 57x, 58x, 59x, 5Ax, 5Bx, 5Cx, 5Dx, 5Ex, 5Fx, 5Gx, 5Hx, 5Jx, 5Kx, 5Lx, 5Mx, 5Nx, 5Px, 5Qx, 5Rx, 5Tx, 5Ux, 5Vx, 5Wx, 5Xx, 5Yx, 5Zx, 62x, 63x, 64x, 65x, 66x, 67x, 68x, 69x, 6Bx, 6Cx, 6Dx, 6Fx, 6Gx, 6Hx, 6Jx, 6Kx, 6Lx, 6Mx, 6Nx, 6Px, 6Qx, 6Rx, 6Sx, 6Tx, 6Ux, 6Vx, 6Wx, 7Mx, 7Nx, 7Rx, 7Sx, 7Tx, 7Yx, 7Zx, 82x, 83x, 84x, 85x, 86x, 87x, 89x, 8Ax, 8Dx, 8Ex, R2x, R3x • 0585-CTO, 42x, 43x, 44x, 52x, 53x, 54x, 55x, 56x, 57x, 58x, 59x, 5Ax, 5Bx, 5Dx, 5Fx, 5Hx, 5Kx, 5Mx, 5Px, 5Rx, 5Tx, 5Vx, 5Yx, 67x, 68x, 69x, 6Ax, 6Bx, 6Cx, 6Dx, 6Ex, 6Fx, 6Jx, 6Kx, 6Lx, 6Mx, 6Nx, 6Tx, 6Ux, 77x • 0591-CTO, 52x, 53x • 4403-CTO, 32x, 33x, 34x, 35x, 36x, 37x, 38x, 39x, 3Ax, 3Bx, 3Cx, 3Dx, 3Ex, 3Fx, 3Gx, 3Hx, 3Jx, 3Kx, 3Lx, 3Mx, 3Nx, 3Px, 3Qx, 3Rx, 3Sx, 3Tx, 3Ux, 3Vx, 3Wx, 3Xx, 3Yx, 3Zx, 42x, 43x, 44x, 45x, 46x, 47x, 48x, 49x, 4Ax, 4Bx, 4Cx, 4Dx, 4Ex, 4Fx, 4Gx, 4Hx, 4Jx, 4Kx, 4Lx, 4Mx, 4Ux, 4Vx, 4Wx, 4Xx, 4Yx, 4Zx, 52x, 53x, 54x, 59x, 5Ax, 5Bx, 5Cx, 5Dx, 5Ex, 5Fx, 5Gx, 5Hx, 5Jx, 5Kx, 5Lx, 5Mx, 64x, 65x, 66x, 67x, 68x, 69x, 6Cx, 6Dx, 6Hx, 6Jx, 6Kx, 6Lx, 6Mx, 6Nx, 6Px, 6Yx, 6Zx, 72x, 73x, 74x, 75x, 76x, 77x • 4404-CTO, 32x, 33x, 34x, 35x, 36x, 37x, 38x, 39x, 3Ax, 3Bx, 3Cx, 3Dx, 3Ex, 3Fx, 3Mx, 3Nx, 3Px, 3Qx, 3Rx, 3Sx, 3Tx, 3Ux, 3Xx, 3Yx, 3Zx, 42x, 43x, 44x, 45x, 46x, 47x, 48x, 4Lx, 4Px, 4Qx, 4Rx • 2550-CTO, 42x, 43x, 44x, 52x, 53x, 54x, 55x, 57x, 58x, 59x, 5Ax, 5Bx, 5Dx, 5Fx, 5Hx, 5Kx, 5Mx, 5Px, 5Rx, 5Tx, 5Vx, 5Xx, 63x, 64x, 65x, 66x, 6Nx • 2597-CTO, 22x, 32x, 52x, 53x, 54x, 55x, 56x, 58x, 59x, 5Ax, 5Bx, 5Cx, 5Dx, 5Ex, 5Fx, 5Gx, 5Hx, 5Jx, 5Kx, 5Lx, 5Mx, 5Nx, 5Px, 5Qx, 5Rx, 5Sx, 5Tx, 5Vx, 5Wx, 5Xx, 5Yx, 5Zx, 62x, 63x, 64x, 65x, 66x, 67x, 69x, 6Bx, 6Cx, 6Dx, 6Ex, 6Fx, 6Jx, 6Kx, 6Lx, 6Mx, 6Nx, 6Px, 6Qx • 2598-CTO, 22x, 24x, 33x, 34x, 35x, 42x, 43x, 44x, 52x, 53x, 54x, 55x, 56x, 57x, 58x, 59x, 5Ax, 5Bx, 5Cx, 5Dx, 5Ex, 5Fx, 5Gx, 5Hx, 5Jx, 5Kx, 5Lx, 5Mx, 5Nx, 5Px, 5Qx, 5Rx, 5Sx, 5Tx, 5Vx, 5Wx, 5Xx, 5Yx, 5Zx, 62x, 63x, 64x, 65x, 66x, 67x, 68x, 69x, 6Ax, 6Bx, 6Cx, 6Dx, 6Ex, 6Fx, 6Gx, 6Jx, 6Kx, 6Lx, 6Nx, 6Px, 6Qx, 6Rx, 7Ex, 7Fx, 7Gx, 7Hx, 7Sx, 7Tx, 7Ux, 7Vx, 7Wx, 7Xx, 83x, 84x, 85x, R2x, R3x • 2599-CTO, 52x, 53x • 4444-CTO, 32x, 33x, 34x, 35x, 36x, 37x, 38x, 39x, 3Ax, 3Bx, 3Cx, 3Dx, 3Ex, 3Fx, 3Gx, 3Hx, 3Jx, 3Kx, 3Lx, 3Rx, 3Ux, 43x, 44x, 45x, 46x, 47x, 48x, 4Bx, 4Cx, 4Dx, 4Ex, 4Fx, 4Jx, 4Kx, 4Lx, 4Nx, 4Qx, 4Rx, 4Sx, 4Tx, 4Ux, 4Vx, 4Wx, 4Xx, 4Yx, 52x, 53x, 54x, 55x, 59x, 5Ax, 5Bx, 5Cx, 5Dx, 5Ex • 4447-CTO, 32x, 33x, 34x, 35x, 36x, 37x, 38x, 39x, 3Ax, 3Bx, 3Cx, 3Dx, 3Ex, 3Hx, 7Lx, 7Mx, 7Nx, 7Px	60Y5019	N

Table 40. Parts list—Overall (continued)

No.	FRU (Overall)	FRU no.	CRU ID
18	Thermal module with fan (discrete) for L412 and L512 • 0530-CTO, 6Cx, 6Dx, 6Hx, 6Jx, 6Kx • 0553-CTO, 25x, 6Xx, 6Yx, 6Zx, 72x, 73x, 74x, 75x, 76x, 77x, 78x, 79x, 7Ax, 7Bx, 7Cx, 7Dx, 7Ex, 7Fx, 7Gx, 7Hx, 7Jx, 7Kx, 7Lx, 7Px, 7Qx, 7Ux, 7Vx, 7Wx, 7Xx, 88x, 8Bx, 8Cx • 0585-CTO, 64x, 65x, 66x, 6Gx, 6Hx, 6Px, 6Qx, 6Rx, 6Sx, 6Xx, 6Yx, 6Zx, 74x, 75x, 76x • 0591-CTO • 4403-CTO, 4Nx, 4Px, 4Rx, 4Sx, 4Tx, 55x, 56x, 57x, 58x, 5Nx, 5Px, 5Qx, 5Rx, 5Sx, 5Tx, 5Ux, 5Vx, 5Wx, 5Xx, 5Yx, 5Zx, 62x, 63x, 6Ax, 6Bx, 6Ex, 6Fx, 6Gx, 6Qx, 6Rx, 6Sx, 6Tx, 6Ux, 6Vx, 6Wx, 6Xx • 4404-CTO, 3Gx, 3Hx, 3Jx, 3Kx, 3Lx, 3Vx, 3Wx, 49x, 4Ax, 4Bx, 4Cx, 4Dx, 4Ex, 4Fx, 4Gx, 4Hx, 4Jx, 4Kx, 4Mx, 4Nx, 4Sx, 4Tx, 4Ux, 4Vx, 4Wx, 4Xx, 4Yx, 4Zx • 2550-CTO, 5Yx, 5Zx, 62x, 67x, 68x, 69x, 6Ax, 6Sx, 6Tx, 6Ux • 2597-CTO, 68x, 6Ax, 6Gx, 6Hx • 2598-CTO, 25x, 6Sx, 6Tx, 6Ux, 6Vx, 6Wx, 6Xx, 6Yx, 6Zx, 72x, 73x, 74x, 75x, 76x, 77x, 78x, 79x, 7Ax, 7Bx, 7Cx, 7Dx, 7Jx, 7Kx, 7Qx, 7Rx, 7Yx, 7Zx, 82x • 2599-CTO • 4444-CTO, 3Mx, 3Nx, 3Px, 3Qx, 3Sx, 3Tx, 3Vx, 3Wx, 3Yx, 3Zx, 42x, 49x, 4Ax, 4Gx, 4Hx, 4Mx, 4Px, 4Zx, 56x, 57x, 58x • 4447-CTO, 3Fx, 3Gx	75Y5861	N
19	Media Card Reader cable assembly	45M2870	N
20	Backup battery	92P1161	N

Table 40. Parts list—Overall (continued)

No.	FRU (Overall)	FRU no.	CRU ID
21	ThinkPad 1x2 b/g/n Wireless LAN Mini-PCI Express Adapter II • 0616-CTO, 22x, 25x • 2842-CTO, 22x, 34x, 3Gx, 3Px, 3Rx, 44x, 46x, 4Ux, 4Vx, 4Wx, 4Xx, 4Yx, 4Zx, 52x, 53x, 54x, 55x, 56x, 57x, 58x, 59x, 5Ax, 5Bx, 5Cx, 5Dx, 66x, 67x, 68x, 69x, 6Ax, 6Bx, 6Cx, 6Dx, 6Ex, 6Fx, 6Gx, 6Hx, 6Jx, 6Kx, 6Lx, 6Mx, 6Nx, 6Px, 6Qx, 6Rx, 6Sx, 6Tx, 6Ux, 6Vx, 6Wx, 6Xx, 6Yx, 6Zx, 72x, 73x, 74x, 75x, 76x, 77x, 78x, 7Ex, 87x, 88x, 89x, 8Ax, 8Bx, 8Cx, 8Dx, 8Ex, 8Fx, 8Gx, 8Hx, 8Jx, 8Kx, 8Lx, 8Mx, 8Nx, 8Sx, 8Tx, 8Ux, 8Vx, 8Wx, 8Xx, 8Yx, 8Zx, 92x, 93x, 94x, 95x, 96x, 97x, 98x, 99x, 9Ax, 9Bx, 9Cx, 9Dx, 9Ex, 9Fx, 9Gx, 9Hx, 9Jx, 9Kx, 9Lx, 9Mx, 9Nx, 9Px, 9Qx, 9Rx, 9Sx, 9Tx, 9Ux, 9Vx, 9Wx, 9Xx, 9Yx, 9Zx, A2x, A3x, A4x, A5x, A6x, A7x, A8x, A9x, AAx, ABx, ACx, ADx, AEx, AFx, AMx, ANx, APx, AQx, ARx, ASx, ATx, AUx, AVx, AWx, AXx, AYx, AZx, B2x, B3x, B4x, B5x, B6x, BCx, BDx, BEx, BFx, BGx, BHx, BJx, BKx, BMx, BUx, BYx, BZx, C2x, C3x, C4x, D5x, D6x, D7x, D8x, D9x, DAx, DBx, DCx, GEx, GFx, GKx, GWx, GXx, H6x, H7x, H8x, H9x, HAx, HBx, HSx, HTx, HUx, HVx, HWx, J5x, J6x, J7x, J8x, J9x, JAx, JBx, JCx, JDx, JEx, JUx, K5x, K6x, K7x, K8x, K9x, KDx, KEx, KFx, KGx, KHx, KJx, KVx, KWx • 2847-CTO, 33x, 3Kx, 3Lx, 4Ax, 4Bx, 4Cx, 4Dx, 4Hx, 4Jx, 52x, 53x, 5Hx, 5Jx, 5Kx, 5Lx, 5Mx, 5Nx, 5Px, 5Qx, 5Rx, 5Sx, 5Tx, 5Ux, 5Vx, 5Wx, 5Xx, 5Yx, 5Zx, 62x, 63x, 64x, 65x, 66x, 67x, 6Ux, 6Vx, 6Wx, 6Xx, 7Ax, 7Bx, 7Cx, 7Tx, 7Vx, 7Zx, 82x, 83x, 89x, 8Ax, 8Bx, 8Cx, 8Dx, 8Ex, 8Fx, 8Gx, 8Qx, 8Tx, 8Yx, 8Zx, 9Fx, 9Kx, A5x, A6x, A8x, A9x, AAx, ABx, ADx, AGx, AHx, AMx, ATx, AUx, AVx, AWx, AXx, AYx, B5x, B6x, B7x, B8x, BAx, BBx, BVx, C3x, C4x, C5x, C6x, C7x, C8x, CAx, CBx, CCx, CDx, CEx, CFx, CGx, CHx, CQx, CSx, D3x, D4x, D5x, D6x, D7x, DBx, DCx, DDx, R2x, R3x, R4x, R5x, R6x, R7x, R8x, R9x, RAx, RBx, RCx, RDx, RFx, RGx, RHx, RJx, RKx, RLx, RMx, RNx, RPx, RQx, RRx, RSx, RTx, RUx, RVx, RWx, RXx • 2873-CTO • 2874-CTO, 32x, 33x, 34x, 35x, 3Lx, 3Mx, 3Nx, 3Px, 3Qx, 3Rx, 3Sx, 46x, 47x, 48x, 4Dx, 4Fx, 4Gx, 4Hx, 4Kx, 4Lx, 4Mx, 4Nx, 4Px, 4Qx, 52x, 53x, 54x, 55x, 56x, 57x, 58x, 59x, 5Ax, 5Bx, 5Cx, 5Dx, 5Ex, 5Fx, 5Gx, 5Hx, 5Jx, 5Kx, 5Lx, 5Mx, 5Nx, 5Px, 5Qx, 5Rx, 62x, 63x, 64x, 65x, 66x, 67x, 68x, 69x, 6Ax, 6Bx, 6Dx, 6Ex, 6Fx, 6Gx, 6Hx, 6Jx, 6Kx, 6Lx, 6Px, 6Qx, 6Rx, 6Sx, 6Tx, 6Xx, 74x, 75x, 76x, 79x, 7Bx, 7Cx, 7Dx, 7Ex, 7Fx, 7Zx, 82x, 84x, 85x, 86x, 89x, 8Ax, 8Bx, 8Cx, 8Dx, 8Ex, 8Fx, 8Gx, 8Hx, 8Jx, 8Kx, 8Lx, 8Mx, 8Nx • 2875-CTO, 22x, 25x, 26x, 27x, 28x, 2Dx, 2Ex, 2Fx, 2Gx, 2Mx, 2Ux, 2Vx, 2Wx, 2Xx, 2Yx, 32x, 33x, 35x, 39x, 3Ax, 3Mx, 3Nx, 3Px, 3Xx, 3Yx, 45x, 46x, 47x, 48x, 49x, 4Ax, 4Bx, 4Cx, 4Dx, 4Ex, 4Fx, 4Gx, 4Hx, 4Lx, 4Nx, 4Px, 4Qx, 4Rx, 4Sx, 4Tx, 4Ux, 4Vx, 4Wx, 52x, 53x, 54x, 55x, 56x, 57x, 58x, 59x, 5Ax, 5Bx, 5Cx, 5Dx, 5Ex, 5Fx, 5Gx, 5Hx, 5Kx, 5Lx, 5Mx, 5Nx, 5Px, 5Qx, R2x, R3x, R4x, R5x, R6x, R7x, R8x, R9x, RAx, RBx, RCx, RDx, RFx, RGx, RHx, RJx • 2931-CTO, 23x, 27x, 28x • 5072-CTO (to be continued)	43Y6553	**

Table 40. Parts list—Overall (continued)

No.	FRU (Overall)	FRU no.	CRU ID
21	(continued) ThinkPad 1x2 b/g/n Wireless LAN Mini-PCI Express Adapter II • 0530-CTO, 22x, 32x, 52x, 53x, 54x, 55x, 56x, 57x, 59x, 5Ax, 5Bx, 5Cx, 5Dx, 5Ex, 5Fx, 5Gx, 5Jx, 5Kx, 5Lx, 5Mx, 5Nx, 5Px, 5Qx, 5Rx, 5Sx, 5Tx, 5Ux, 5Vx, 5Wx, 5Xx, 5Zx, 62x, 68x, 69x, 6Ax, 6Bx, 6Cx, 6Dx, 6Ex, 6Fx, 6Gx, 6Hx, 6Jx, 6Kx • 0553-CTO, 42x, 58x, 5Dx, 5Kx, 5Lx, 5Mx, 5Nx, 5Px, 5Yx, 5Zx, 62x, 63x, 64x, 65x, 66x, 67x, 68x, 69x, 6Bx, 6Dx, 6Fx, 6Gx, 6Hx, 6Jx, 6Kx, 6Lx, 6Sx, 6Vx, 6Wx, 6Xx, 72x, 74x, 7Bx, 7Cx, 7Ex, 7Fx, 7Hx, 7Jx, 7Mx, 7Nx, 7Px, 7Qx, 7Rx, 7Sx, 7Vx, 7Wx, 7Xx, 82x, 89x, R2x • 0585-CTO, 42x, 54x, 64x, 68x, 69x, 6Ax, 6Bx, 6Jx, 6Kx, 6Lx, 6Mx, 6Nx, 6Px, 6Qx, 6Rx, 6Sx, 6Tx, 6Ux, 6Xx, 74x • 0591-CTO, 52x • 4403-CTO, 32x, 35x, 3Ax, 3Bx, 3Cx, 3Dx, 3Ex, 3Fx, 3Gx, 3Hx, 3Jx, 3Nx, 3Sx, 3Wx, 3Xx, 3Yx, 3Zx, 42x, 43x, 44x, 45x, 46x, 47x, 48x, 49x, 4Ax, 4Bx, 4Fx, 4Kx, 4Lx, 4Nx, 4Px, 4Rx, 4Sx, 4Tx, 4Ux, 4Vx, 4Wx, 4Xx, 4Yx, 4Zx, 52x, 55x, 56x, 57x, 59x, 5Ax, 5Bx, 5Dx, 5Ex, 5Fx, 5Hx, 5Jx, 5Kx, 5Nx, 5Px, 5Qx, 5Rx, 5Tx, 5Ux, 5Vx, 5Wx, 5Xx, 5Yx, 62x, 64x, 65x, 66x, 67x, 68x, 6Ax, 6Bx, 6Dx, 6Ex, 6Fx, 6Gx, 6Jx, 6Lx, 6Mx, 6Nx, 6Px, 6Qx, 6Rx, 6Sx, 6Tx, 6Ux, 6Vx, 6Wx, 6Xx, 72x, 73x, 75x, 76x • 4404-CTO, 32x, 3Mx, 3Nx, 3Px, 3Qx, 3Xx, 3Yx, 3Zx, 43x, 44x, 46x, 47x, 48x, 49x, 4Ax, 4Bx, 4Dx, 4Ex, 4Fx, 4Gx, 4Jx, 4Mx, 4Nx, 4Qx, 4Rx, 4Sx, 4Tx, 4Ux, 4Vx, 4Wx, 4Xx, 4Yx, 4Zx • 2550-CTO, 42x, 53x, 5Bx, 5Dx, 5Fx, 5Hx, 5Kx, 5Mx, 5Px, 5Rx, 5Tx, 5Vx, 5Yx, 63x, 64x, 65x, 66x, 67x, 68x, 69x, 6Ax, 6Sx • 2597-CTO, 22x, 32x, 52x, 53x, 54x, 55x, 56x, 58x, 59x, 5Ax, 5Bx, 5Cx, 5Dx, 5Ex, 5Fx, 5Gx, 5Hx, 5Jx, 5Kx, 5Lx, 5Mx, 5Nx, 5Px, 5Qx, 5Rx, 5Sx, 5Tx, 5Vx, 5Wx, 5Xx, 65x, 66x, 67x, 6Ax, 6Bx, 6Cx, 6Dx, 6Ex, 6Fx, 6Gx, 6Hx, 6Jx, 6Kx, 6Lx, 6Mx, 6Nx • 2598-CTO, 42x, 52x, 54x, 5Dx, 5Ex, 5Fx, 5Gx, 5Hx, 5Jx, 5Mx, 5Nx, 5Px, 5Qx, 62x, 63x, 64x, 65x, 67x, 68x, 69x, 6Ax, 6Bx, 6Cx, 6Dx, 6Ex, 6Fx, 6Gx, 6Px, 6Qx, 6Rx, 6Sx, 73x, 75x, 76x, 77x, 79x, 7Bx, 7Cx, 7Gx, 7Hx, 7Jx, 7Kx, 7Sx, 7Vx, R2x • 2599-CTO, 52x • 4444-CTO, 32x, 35x, 39x, 3Ax, 3Bx, 3Cx, 3Dx, 3Ex, 3Fx, 3Gx, 3Hx, 3Jx, 3Kx, 3Lx, 3Mx, 3Vx, 3Wx, 3Yx, 3Zx, 42x, 43x, 44x, 45x, 46x, 47x, 48x, 49x, 4Ax, 4Bx, 4Cx, 4Dx, 4Ex, 4Gx, 4Hx, 4Nx, 4Rx, 4Tx, 4Ux, 4Wx, 4Xx, 5Bx, 5Cx, 5Dx, 5Ex • 4447-CTO, 32x, 34x, 35x, 36x, 37x, 38x, 39x, 3Ax, 3Bx, 3Cx, 3Dx, 3Hx	43Y6553	**

Table 40. Parts list—Overall (continued)

No.	FRU (Overall)	FRU no.	CRU ID
21	ThinkPad 1x2 b/g/n Wireless LAN Mini-PCI Express Adapter II • 0616-CTO, 22x, 25x • 2842-CTO, 22x, 34x, 3Gx, 3Px, 3Rx, 44x, 46x, 4Ux, 4Vx, 4Wx, 4Xx, 4Yx, 4Zx, 52x, 53x, 54x, 55x, 56x, 57x, 58x, 59x, 5Ax, 5Bx, 5Cx, 5Dx, 66x, 67x, 68x, 69x, 6Ax, 6Bx, 6Cx, 6Dx, 6Ex, 6Fx, 6Gx, 6Hx, 6Jx, 6Kx, 6Lx, 6Mx, 6Nx, 6Px, 6Qx, 6Rx, 6Sx, 6Tx, 6Ux, 6Vx, 6Wx, 6Xx, 6Yx, 6Zx, 72x, 73x, 74x, 75x, 76x, 77x, 78x, 7Ex, 87x, 88x, 89x, 8Ax, 8Bx, 8Cx, 8Dx, 8Ex, 8Fx, 8Gx, 8Hx, 8Jx, 8Kx, 8Lx, 8Mx, 8Nx, 8Sx, 8Tx, 8Ux, 8Vx, 8Wx, 8Xx, 8Yx, 8Zx, 92x, 93x, 94x, 95x, 96x, 97x, 98x, 99x, 9Ax, 9Bx, 9Cx, 9Dx, 9Ex, 9Fx, 9Gx, 9Hx, 9Jx, 9Kx, 9Lx, 9Mx, 9Nx, 9Px, 9Qx, 9Rx, 9Sx, 9Tx, 9Ux, 9Vx, 9Wx, 9Xx, 9Yx, 9Zx, A2x, A3x, A4x, A5x, A6x, A7x, A8x, A9x, AAx, ABx, ACx, ADx, AEx, AFx, AMx, ANx, APx, AQx, ARx, ASx, ATx, AUx, AVx, AWx, AXx, AYx, AZx, B2x, B3x, B4x, B5x, B6x, BCx, BDx, BEx, BFx, BGx, BHx, BJx, BKx, BMx, BUx, BYx, BZx, C2x, C3x, C4x, D5x, D6x, D7x, D8x, D9x, DAx, DBx, DCx, GEx, GFx, GKx, GWx, GXx, H6x, H7x, H8x, H9x, HAx, HBx, HSx, HTx, HUx, HVx, HWx, J5x, J6x, J7x, J8x, J9x, JAx, JBx, JCx, JDx, JEx, JUx, K5x, K6x, K7x, K8x, K9x, KDx, KEx, KFx, KGx, KHx, KJx, KVx, KWx • 2847-CTO, 33x, 3Kx, 3Lx, 4Ax, 4Bx, 4Cx, 4Dx, 4Hx, 4Jx, 52x, 53x, 5Hx, 5Jx, 5Kx, 5Lx, 5Mx, 5Nx, 5Px, 5Qx, 5Rx, 5Sx, 5Tx, 5Ux, 5Vx, 5Wx, 5Xx, 5Yx, 5Zx, 62x, 63x, 64x, 65x, 66x, 67x, 6Ux, 6Vx, 6Wx, 6Xx, 7Ax, 7Bx, 7Cx, 7Tx, 7Vx, 7Zx, 82x, 83x, 89x, 8Ax, 8Bx, 8Cx, 8Dx, 8Ex, 8Fx, 8Gx, 8Qx, 8Tx, 8Yx, 8Zx, 9Fx, 9Kx, A5x, A6x, A8x, A9x, AAx, ABx, ADx, AGx, AHx, AMx, ATx, AUx, AVx, AWx, AXx, AYx, B5x, B6x, B7x, B8x, BAx, BBx, BVx, C3x, C4x, C5x, C6x, C7x, C8x, CAx, CBx, CCx, CDx, CEx, CFx, CGx, CHx, CQx, CSx, D3x, D4x, D5x, D6x, D7x, DBx, DCx, DDx, R2x, R3x, R4x, R5x, R6x, R7x, R8x, R9x, RAx, RBx, RCx, RDx, RFx, RGx, RHx, RJx, RKx, RLx, RMx, RNx, RPx, RQx, RRx, RSx, RTx, RUx, RVx, RWx, RXx • 2873-CTO • 2874-CTO, 32x, 33x, 34x, 35x, 3Lx, 3Mx, 3Nx, 3Px, 3Qx, 3Rx, 3Sx, 46x, 47x, 48x, 4Dx, 4Fx, 4Gx, 4Hx, 4Kx, 4Lx, 4Mx, 4Nx, 4Px, 4Qx, 52x, 53x, 54x, 55x, 56x, 57x, 58x, 59x, 5Ax, 5Bx, 5Cx, 5Dx, 5Ex, 5Fx, 5Gx, 5Hx, 5Jx, 5Kx, 5Lx, 5Mx, 5Nx, 5Px, 5Qx, 5Rx, 62x, 63x, 64x, 65x, 66x, 67x, 68x, 69x, 6Ax, 6Bx, 6Dx, 6Ex, 6Fx, 6Gx, 6Hx, 6Jx, 6Kx, 6Lx, 6Px, 6Qx, 6Rx, 6Sx, 6Tx, 6Xx, 74x, 75x, 76x, 79x, 7Bx, 7Cx, 7Dx, 7Ex, 7Fx, 7Zx, 82x, 84x, 85x, 86x, 89x, 8Ax, 8Bx, 8Cx, 8Dx, 8Ex, 8Fx, 8Gx, 8Hx, 8Jx, 8Kx, 8Lx, 8Mx, 8Nx • 2875-CTO, 22x, 25x, 26x, 27x, 28x, 2Dx, 2Ex, 2Fx, 2Gx, 2Mx, 2Ux, 2Vx, 2Wx, 2Xx, 2Yx, 32x, 33x, 35x, 39x, 3Ax, 3Mx, 3Nx, 3Px, 3Xx, 3Yx, 45x, 46x, 47x, 48x, 49x, 4Ax, 4Bx, 4Cx, 4Dx, 4Ex, 4Fx, 4Gx, 4Hx, 4Lx, 4Nx, 4Px, 4Qx, 4Rx, 4Sx, 4Tx, 4Ux, 4Vx, 4Wx, 52x, 53x, 54x, 55x, 56x, 57x, 58x, 59x, 5Ax, 5Bx, 5Cx, 5Dx, 5Ex, 5Fx, 5Gx, 5Hx, 5Kx, 5Lx, 5Mx, 5Nx, 5Px, 5Qx, R2x, R3x, R4x, R5x, R6x, R7x, R8x, R9x, RAx, RBx, RCx, RDx, RFx, RGx, RHx, RJx • 2931-CTO, 23x, 27x, 28x • 5072-CTO (to be continued)	60Y3177	**

Table 40. Parts list—Overall (continued)

No.	FRU (Overall)	FRU no.	CRU ID
21	(continued) ThinkPad 1x2 b/g/n Wireless LAN Mini-PCI Express Adapter II • 0530-CTO, 22x, 32x, 52x, 53x, 54x, 55x, 56x, 57x, 59x, 5Ax, 5Bx, 5Cx, 5Dx, 5Ex, 5Fx, 5Gx, 5Jx, 5Kx, 5Lx, 5Mx, 5Nx, 5Px, 5Qx, 5Rx, 5Sx, 5Tx, 5Ux, 5Vx, 5Wx, 5Xx, 5Zx, 62x, 68x, 69x, 6Ax, 6Bx, 6Cx, 6Dx, 6Ex, 6Fx, 6Gx, 6Hx, 6Jx, 6Kx • 0553-CTO, 42x, 58x, 5Dx, 5Kx, 5Lx, 5Mx, 5Nx, 5Px, 5Yx, 5Zx, 62x, 63x, 64x, 65x, 66x, 67x, 68x, 69x, 6Bx, 6Dx, 6Fx, 6Gx, 6Hx, 6Jx, 6Kx, 6Lx, 6Sx, 6Vx, 6Wx, 6Xx, 72x, 74x, 7Bx, 7Cx, 7Ex, 7Fx, 7Hx, 7Jx, 7Mx, 7Nx, 7Px, 7Qx, 7Rx, 7Sx, 7Vx, 7Wx, 7Xx, 82x, 89x, R2x • 0585-CTO, 42x, 54x, 64x, 68x, 69x, 6Ax, 6Bx, 6Jx, 6Kx, 6Lx, 6Mx, 6Nx, 6Px, 6Qx, 6Rx, 6Sx, 6Tx, 6Ux, 6Xx, 74x • 0591-CTO, 52x • 4403-CTO, 32x, 35x, 3Ax, 3Bx, 3Cx, 3Dx, 3Ex, 3Fx, 3Gx, 3Hx, 3Jx, 3Nx, 3Sx, 3Wx, 3Xx, 3Yx, 3Zx, 42x, 43x, 44x, 45x, 46x, 47x, 48x, 49x, 4Ax, 4Bx, 4Fx, 4Kx, 4Lx, 4Nx, 4Px, 4Rx, 4Sx, 4Tx, 4Ux, 4Vx, 4Wx, 4Xx, 4Yx, 4Zx, 52x, 55x, 56x, 57x, 59x, 5Ax, 5Bx, 5Dx, 5Ex, 5Fx, 5Hx, 5Jx, 5Kx, 5Nx, 5Px, 5Qx, 5Rx, 5Tx, 5Ux, 5Vx, 5Wx, 5Xx, 5Yx, 62x, 64x, 65x, 66x, 67x, 68x, 6Ax, 6Bx, 6Dx, 6Ex, 6Fx, 6Gx, 6Jx, 6Lx, 6Mx, 6Nx, 6Px, 6Qx, 6Rx, 6Sx, 6Tx, 6Ux, 6Vx, 6Wx, 6Xx, 72x, 73x, 75x, 76x • 4404-CTO, 32x, 3Mx, 3Nx, 3Px, 3Qx, 3Xx, 3Yx, 3Zx, 43x, 44x, 46x, 47x, 48x, 49x, 4Ax, 4Bx, 4Dx, 4Ex, 4Fx, 4Gx, 4Jx, 4Mx, 4Nx, 4Qx, 4Rx, 4Sx, 4Tx, 4Ux, 4Vx, 4Wx, 4Xx, 4Yx, 4Zx • 2550-CTO, 42x, 53x, 5Bx, 5Dx, 5Fx, 5Hx, 5Kx, 5Mx, 5Px, 5Rx, 5Tx, 5Vx, 5Yx, 63x, 64x, 65x, 66x, 67x, 68x, 69x, 6Ax, 6Sx • 2597-CTO, 22x, 32x, 52x, 53x, 54x, 55x, 56x, 58x, 59x, 5Ax, 5Bx, 5Cx, 5Dx, 5Ex, 5Fx, 5Gx, 5Hx, 5Jx, 5Kx, 5Lx, 5Mx, 5Nx, 5Px, 5Qx, 5Rx, 5Sx, 5Tx, 5Vx, 5Wx, 5Xx, 65x, 66x, 67x, 6Ax, 6Bx, 6Cx, 6Dx, 6Ex, 6Fx, 6Gx, 6Hx, 6Jx, 6Kx, 6Lx, 6Mx, 6Nx • 2598-CTO, 42x, 52x, 54x, 5Dx, 5Ex, 5Fx, 5Gx, 5Hx, 5Jx, 5Mx, 5Nx, 5Px, 5Qx, 62x, 63x, 64x, 65x, 67x, 68x, 69x, 6Ax, 6Bx, 6Cx, 6Dx, 6Ex, 6Fx, 6Gx, 6Px, 6Qx, 6Rx, 6Sx, 73x, 75x, 76x, 77x, 79x, 7Bx, 7Cx, 7Gx, 7Hx, 7Jx, 7Kx, 7Sx, 7Vx, R2x • 2599-CTO, 52x • 4444-CTO, 32x, 35x, 39x, 3Ax, 3Bx, 3Cx, 3Dx, 3Ex, 3Fx, 3Gx, 3Hx, 3Jx, 3Kx, 3Lx, 3Mx, 3Vx, 3Wx, 3Yx, 3Zx, 42x, 43x, 44x, 45x, 46x, 47x, 48x, 49x, 4Ax, 4Bx, 4Cx, 4Dx, 4Ex, 4Gx, 4Hx, 4Nx, 4Rx, 4Tx, 4Ux, 4Wx, 4Xx, 5Bx, 5Cx, 5Dx, 5Ex • 4447-CTO, 32x, 34x, 35x, 36x, 37x, 38x, 39x, 3Ax, 3Bx, 3Cx, 3Dx, 3Hx	60Y3177	**
21	ThinkPad 1x1 b/g/n Wireless LAN Mini-PCI Express Adapter II • 0616-CTO, 2Cx, 2Dx • 2842-CTO, L2x, L3x, L4x, L5x, L6x, L7x • 2847-CTO, DJx, DLx • 2873-CTO • 2931-CTO • 5072-CTO	60Y3247	**
21	ThinkPad 1x1 b/g/n Wireless LAN Mini-PCI Express Adapter II • 0616-CTO, 2Cx, 2Dx • 2842-CTO, L2x, L3x, L4x, L5x, L6x, L7x • 2847-CTO, DJx, DLx • 2873-CTO • 2931-CTO • 5072-CTO	60Y3249	**

Table 40. Parts list—Overall (continued)

No.	FRU (Overall)	FRU no.	CRU ID
21	Intel® WiFi Link Wireless-N 1000 • 2842-CTO, 25x, 26x, 27x, 28x, 29x, AGx, AHx, AJx, AKx, ALx, CMx, CNx, CPx, CQx, CRx, CSx, CUx, CVx, CWx, CXx, CYx, CZx, D2x, D3x, D4x, DDx, DEx, DFx, DGx, DHx, DJx, DKx, DLx, DMx, DNx, DPx, DQx, DRx, DSx, DTx, DUx, DVx, DWx, DXx, DYx, DZx, E2x, E3x, E4x, E5x, E6x, E7x, E8x, E9x, EAx, EBx, ECx, EDx, EEx, EJx, EKx, ELx, EMx, ENx, EPx, EQx, EUx, EVx, EWx, EXx, EYx, F2x, F3x, F4x, F5x, F6x, F7x, F8x, F9x, FAx, FBx, EFx, EGx, EHx, ERx, ESx, ETx, EZx, FCx, FDx, FEx, FFx, FGx, FHx, FJx, FKx, FLx, FMx, FNx, FPx, FQx, FSx, FTx, FUx, FVx, FWx, FXx, FYx, FZx, G2x, G3x, G4x, G5x, G6x, G7x, G8x, G9x, GBx, GCx, GDx, GGx, GHx, GJx, GLx, GMx, GNx, GPx, GQx, GRx, GSx, GTx, GUx, GVx, GYx, GZx, H2x, H3x, H5x, HDx, HEx, HFx, HGx, HHx, HJx, HKx, HLx, HMx, HNx, HPx, HQx, HRx, HXx, J4x, JFx, JGx, JHx, JJx, JKx, JLx, JMx, JNx, JPx • 2847-CTO, 6Jx, 6Kx, 7Wx, 7Xx, 7Yx, 8Kx, 8Mx, 8Px, 8Sx, 8Vx, Q2x, Q3x, Q4x, Q5x, Q6x, Q7x, Q8x, Q9x, QAx, QBx, QCx, QDx, QEx, QFx, QGx, QHx, QJx, 2Wx, 2Xx, 2Yx, 3Zx, 6Nx, 6Px, 6Qx, 6Rx, 6Sx, 6Tx, 6Yx, 6Zx, 7Kx, 7Lx, 7Mx, 7Nx, 92x, 93x, 94x, 95x, 96x, 97x, 98x, 99x, 9Ax, 9Bx, 9Cx, 9Dx, 9Ex, 9Gx, 9Hx, 9Jx, 9Mx, 9Nx, 9Px, 9Qx, 9Rx, 9Sx, 9Tx, 9Ux, 9Vx, 9Wx, 9Xx, 9Yx, 9Zx, 7Qx, 7Rx, 7Sx, 9Lx, A2x, A3x, A4x, ACx, AEx, AFx, AJx, AKx, ALx, ANx, APx, AQx, ARx, ASx, 7Ux, AZx, B3x, B4x, BGx, BHx, BJx, BKx, BMx, BNx, BPx, BSx, BTx, BUx, BWx, BXx, BYx, BZx, C2x, C9x, CJx, CKx, CLx, CMx, CNx, CPx • 2873-CTO • 2874-CTO, 77x, 78x, 7Ax, 7Gx, 7Hx, 7Jx, 7Kx, 7Lx, 7Mx, 7Nx, 7Px, 7Qx, 7Rx, 7Ux, 7Vx, 7Wx, 7Xx, 7Yx, 87x, 88x • 2875-CTO, 23x, 24x, 2Hx, 2Nx, 2Px, 2Qx, 2Rx, 2Sx, 2Tx, 2Zx, 3Zx, 4Xx, 4Yx, 5Jx • 2931-CTO	60Y3203	**
21	Intel® Centrino® Wireless-N 1000 • 0616-CTO, 26x, 27x, 28x, 29x • 2842-CTO, 25x, 26x, 27x, 28x, 29x, AGx, AHx, AJx, AKx, ALx, CMx, CNx, CPx, CQx, CRx, CSx, CUx, CVx, CWx, CXx, CYx, CZx, D2x, D3x, D4x, DDx, DEx, DFx, DGx, DHx, DJx, DKx, DLx, DMx, DNx, DPx, DQx, DRx, DSx, DTx, DUx, DVx, DWx, DXx, DYx, DZx, E2x, E3x, E4x, E5x, E6x, E7x, E8x, E9x, EAx, EBx, ECx, EDx, EEx, EFx, EGx, EHx, EJx, EKx, ELx, EMx, ENx, EPx, EQx, ERx, ESx, ETx, EUx, EVx, EWx, EXx, EYx, EZx, F2x, F3x, F4x, F5x, F6x, F7x, F8x, F9x, FAx, FBx, FCx, FDx, FEx, FFx, FGx, FHx, FJx, FKx, FLx, FMx, FNx, FPx, FQx, FSx, FTx, FUx, FVx, FWx, FXx, FYx, FZx, G2x, G3x, G4x, G5x, G6x, G7x, G8x, G9x, GBx, GCx, GDx, GGx, GHx, GJx, GLx, GMx, GNx, GPx, GQx, GRx, GSx, GTx, GUx, GVx, GYx, GZx, H2x, H3x, H4x, H5x, HDx, HEx, HFx, HGx, HHx, HJx, HKx, HLx, HMx, HNx, HPx, HQx, HRx, HXx, J4x, JFx, JGx, JHx, JJx, JKx, JLx, JMx, JNx, JPx, JQx, JRx, JSx, JTx, JVx, JWx, JXx, JYx, JZx, K2x, K3x, K4x, KAx, KBx, KCx, KKx, KLx, KMx, KNx, KPx, KQx, KRx, KSx, KTx, KUx, KXx, KYx, KZx • 2847-CTO, 2Wx, 2Xx, 2Yx, 3Zx, 6Jx, 6Kx, 6Nx, 6Px, 6Qx, 6Rx, 6Sx, 6Tx, 6Yx, 6Zx, 7Kx, 7Lx, 7Mx, 7Nx, 7Qx, 7Rx, 7Sx, 7Ux, 7Wx, 7Xx, 7Yx, 8Kx, 8Mx, 8Px, 8Sx, 8Vx, 92x, 93x, 94x, 95x, 96x, 97x, 98x, 99x, 9Ax, 9Bx, 9Cx, 9Dx, 9Ex, 9Gx, 9Hx, 9Jx, 9Lx, 9Mx, 9Nx, 9Px, 9Qx, 9Rx, 9Sx, 9Tx, 9Ux, 9Vx, 9Wx, 9Xx, 9Yx, 9Zx, A2x, A3x, A4x, ACx, AEx, AFx, AJx, AKx, ALx, ANx, APx, AQx, ARx, ASx, AZx, B3x, B4x, BGx, BHx, BJx, BKx, BMx, BNx, BPx, BSx, BTx, BUx, BWx, BXx, BYx, BZx, C2x, C9x, CJx, CKx, CLx, CMx, CNx, CPx, CRx, CUx, CVx, CWx, CXx, CYx, CZx, D2x, D8x, D9x, DAx, DEx, DFx, DGx, DHx, DKx, Q2x, Q3x, Q4x, Q5x, Q6x, Q7x, Q8x, Q9x, QAx, QBx, QCx, QDx, QEx, QFx, QGx, QHx, QJx • 2873-CTO • 2874-CTO, 77x, 78x, 7Ax, 7Gx, 7Hx, 7Jx, 7Kx, 7Lx, 7Mx, 7Nx, 7Px, 7Qx, 7Rx, 7Ux, 7Vx, 7Wx, 7Xx, 7Yx, 87x, 88x • 2875-CTO, 23x, 24x, 2Hx, 2Nx, 2Px, 2Qx, 2Rx, 2Sx, 2Tx, 2Zx, 3Zx, 4Xx, 4Yx, 5Jx • 2931-CTO, 29x, 2Ax, 2Bx • 5072-CTO (to be continued)	60Y3241	**

Table 40. Parts list—Overall (continued)

No.	FRU (Overall)	FRU no.	CRU ID
21	(continued) Intel® Centrino® Wireless-N 1000 • 0530-CTO, 6Nx • 0553-CTO, 85x, 86x, 88x, 8Dx, 8Ex • 0585-CTO • 0591-CTO • 4403-CTO, 77x • 4404-CTO • 2550-CTO • 2597-CTO • 2598-CTO, 7Wx • 2599-CTO • 4444-CTO • 4447-CTO	60Y3241	**
21	Intel WiFi Link 5100 • 2842-CTO, 23x, 24x, 2Ax, 2Bx, 2Cx, 2Dx, 2Ex, 33x, 35x, 36x, 37x, 39x, 3Bx, 3Dx, 3Fx, 3Hx, 3Qx, 3Sx, 3Tx, 3Ux, 3Vx, 42x, 43x, 45x, 47x, 48x, 49x, 4Ax, 4Bx, 4Cx, 4Dx, 4Ex, 4Fx, 4Gx, 4Hx, 4Jx, 4Kx, 4Lx, 4Mx, 4Nx, 4Px, 4Qx, 4Rx, 4Sx, 4Tx, 5Ex, 5Fx, 5Gx, 5Hx, 5Jx, 5Kx, 5Lx, 5Mx, 5Nx, 5Px, 5Qx, 5Rx, 5Sx, 5Tx, 5Ux, 5Vx, 5Wx, 5Xx, 5Yx, 5Zx, 62x, 63x, 64x, 65x, 7Bx, 7Cx, 7Dx, 7Fx, 7Gx, 7Hx, 7Jx, 7Px, 7Qx, 7Rx, 7Sx, 7Tx, 7Ux, 7Vx, 7Wx, 7Xx, 7Yx, 7Zx, 82x, 83x, 84x, 85x, 86x, 8Rx, B7x, B8x, B9x, BAx, BBx, BNx, BPx, BQx, BRx, BSx, BTx, BVx, BWx, BXx, C5x, C6x, C7x, C8x, C9x, CAx, CBx, CCx, CDx, CEx, CFx, CGx, CHx, CJx, CKx, CLx, HCx, HYx, HZx, J2x, J3x • 2847-CTO, 22x, 24x, 25x, 26x, 27x, 28x, 29x, 2Ax, 2Bx, 2Cx, 2Dx, 2Ex, 2Fx, 2Gx, 2Hx, 2Jx, 2Kx, 2Lx, 2Mx, 2Nx, 2Px, 2Qx, 2Rx, 2Sx, 2Tx, 2Ux, 2Vx, 2Zx, 34x, 35x, 36x, 37x, 38x, 39x, 3Dx, 3Ex, 3Mx, 3Nx, 3Px, 3Qx, 3Vx, 3Wx, 3Xx, 3Yx, 42x, 43x, 44x, 45x, 46x, 47x, 48x, 49x, 4Ex, 4Fx, 4Gx, 4Nx, 4Px, 4Qx, 4Rx, 4Sx, 4Tx, 4Ux, 4Vx, 4Wx, 4Xx, 4Yx, 4Zx, 54x, 55x, 56x, 57x, 58x, 59x, 5Ax, 5Bx, 5Cx, 5Dx, 5Ex, 5Fx, 5Gx, 68x, 69x, 6Ax, 6Bx, 6Cx, 6Dx, 6Ex, 6Fx, 6Hx, 6Lx, 6Mx, 72x, 73x, 74x, 75x, 76x, 77x, 78x, 79x, 7Ex, 7Fx, 7Jx, 7Px, 84x, 85x, 86x, 87x, 88x, 8Hx, 8Jx, 8Lx, 8Nx, 8Rx, 8Ux, 8Wx, 8Xx, A7x, B2x, BCx, BDx, BEx, BFx, BQx, BRx • 2873-CTO, 22x, 32x, 33x • 2874-CTO, 22x, 36x, 37x, 39x, 3Bx, 3Ex, 3Gx, 3Kx, 49x, 4Ax, 4Bx, 4Cx, 4Jx, 6Cx, 6Mx, 6Nx, 6Ux, 6Vx, 6Wx, 6Yx, 6Zx, 72x, 73x, 7Sx, 7Tx, 83x • 2875-CTO, 29x, 2Ax, 2Bx, 2Cx, 2Jx, 2Kx, 2Lx, 36x, 3Wx, 42x, 43x, 44x, 4Jx, 4Kx • 2931-CTO, 24x, 25x, 26x	43Y6517	**
21	Intel WiMAX/WiFi Link 5150 • 2842-CTO • 2847-CTO, 23x, 6Gx • 2873-CTO • 2874-CTO • 2875-CTO, 5Rx, 5Sx • 2931-CTO, 22x	43Y6515	**
21	Intel WiMAX/WiFi Link 5150 for Russia • 2842-CTO • 2847-CTO, 7Dx, B9x • 2873-CTO • 2874-CTO • 2875-CTO • 2931-CTO	43Y6541	**

Table 40. Parts list—Overall (continued)

No.	FRU (Overall)	FRU no.	CRU ID
21	Intel Centrino Advanced-N 6200 • 0530-CTO, 63x, 64x, 65x, 66x, 67x, 6Lx, 6Mx • 0553-CTO, 22x, 25x, 33x, 35x, 36x, 43x, 44x, 52x, 53x, 54x, 55x, 56x, 57x, 59x, 5Ax, 5Bx, 5Cx, 5Ex, 5Fx, 5Gx, 5Hx, 5Jx, 5Qx, 5Rx, 5Tx, 5Ux, 5Vx, 5Wx, 6Cx, 6Mx, 6Nx, 6Px, 6Qx, 6Rx, 6Tx, 6Ux, 6Yx, 6Zx, 73x, 75x, 76x, 77x, 78x, 79x, 7Ax, 7Dx, 7Gx, 7Kx, 7Lx, 7Tx, 7Ux, 7Yx, 7Zx, 83x, 84x, 87x, 8Ax, 8Bx, 8Cx, R3x • 0585-CTO, 43x, 44x, 52x, 53x, 55x, 56x, 57x, 58x, 59x, 5Ax, 5Bx, 5Dx, 5Fx, 5Hx, 5Kx, 5Mx, 5Px, 5Rx, 5Tx, 5Vx, 5Yx, 65x, 66x, 67x, 6Cx, 6Dx, 6Ex, 6Fx, 6Gx, 6Hx, 6Yx, 6Zx, 75x, 76x, 77x • 0591-CTO, 53x • 4403-CTO, 33x, 34x, 36x, 37x, 38x, 39x, 3Kx, 3Lx, 3Mx, 3Px, 3Qx, 3Rx, 3Tx, 3Ux, 3Vx, 4Cx, 4Dx, 4Ex, 4Gx, 4Hx, 4Jx, 4Mx, 53x, 54x, 58x, 5Cx, 5Gx, 5Lx, 5Mx, 5Sx, 5Zx, 63x, 69x, 6Cx, 6Hx, 6Kx, 6Yx, 6Zx, 74x • 4404-CTO, 33x, 34x, 35x, 36x, 37x, 38x, 39x, 3Ax, 3Bx, 3Cx, 3Dx, 3Ex, 3Fx, 3Gx, 3Hx, 3Jx, 3Kx, 3Lx, 3Rx, 3Sx, 3Tx, 3Ux, 3Vx, 3Wx, 42x, 45x, 4Cx, 4Hx, 4Kx, 4Lx, 4Px • 2550-CTO, 43x, 44x, 52x, 54x, 55x, 57x, 58x, 59x, 5Ax, 5Xx, 5Zx, 62x, 6Nx, 6Tx, 6Ux • 2597-CTO, 5Yx, 5Zx, 62x, 63x, 64x, 68x, 69x, 6Px, 6Qx • 2598-CTO, 22x, 25x, 33x, 34x, 35x, 43x, 44x, 53x, 55x, 56x, 57x, 58x, 59x, 5Ax, 5Bx, 5Cx, 5Kx, 5Lx, 5Rx, 5Sx, 5Tx, 5Vx, 5Wx, 5Xx, 5Yx, 66x, 6Jx, 6Kx, 6Lx, 6Nx, 6Tx, 6Ux, 6Vx, 6Wx, 6Xx, 6Yx, 6Zx, 72x, 74x, 78x, 7Ax, 7Dx, 7Ex, 7Fx, 7Qx, 7Rx, 7Tx, 7Ux, 7Xx, 7Yx, 7Zx, 82x, 83x, 84x, 85x, R3x • 2599-CTO, 53x • 4444-CTO, 33x, 34x, 36x, 37x, 38x, 3Nx, 3Px, 3Qx, 3Rx, 3Sx, 3Tx, 3Ux, 4Fx, 4Jx, 4Kx, 4Lx, 4Mx, 4Px, 4Qx, 4Sx, 4Vx, 4Yx, 4Zx, 52x, 53x, 54x, 55x, 56x, 57x, 58x, 59x, 5Ax • 4447-CTO, 33x, 3Ex, 3Fx, 3Gx, 7Lx, 7Nx	60Y3231	**
21	Intel Centrino Advanced-N x WiMAX 6250, WW SKU • 0530-CTO • 0553-CTO, 24x, 5Xx • 0585-CTO • 0591-CTO • 4403-CTO • 4404-CTO • 2550-CTO • 2597-CTO • 2598-CTO, 24x, 5Zx • 2599-CTO • 4444-CTO • 4447-CTO, 7Mx, 7Px	60Y3195	**
21	Intel Centrino Advanced-N x WiMAX 6250, Russia SKU • 0530-CTO • 0553-CTO • 0585-CTO • 0591-CTO • 4403-CTO • 4404-CTO • 2550-CTO • 2597-CTO • 2598-CTO • 2599-CTO • 4444-CTO • 4447-CTO	60Y3209	**

Table 40. Parts list—Overall (continued)

No.	FRU (Overall)	FRU no.	CRU ID
22	CPU assembly, Intel® Celeron® processor T3000 (1.8 GHz) R-0 • 2842-CTO • 2847-CTO • 2873-CTO • 2874-CTO, 32x, 33x, 34x, 35x, 37x, 3Ex, 3Lx, 3Mx, 3Nx, 3Px, 3Rx, 46x, 4Dx, 4Fx, 4Gx, 4Hx, 4Mx, 4Px • 2875-CTO, 23x, 24x, 2Ux, 2Vx, 32x, 33x, 35x, 3Mx, 3Nx, 3Wx, 3Yx, 42x, 43x, 44x, 45x, 47x, 49x, 4Ax, 4Bx, 4Fx, 4Gx, 4Hx, 4Jx, 4Kx, 4Lx, 4Nx, 4Qx, 4Rx, 4Sx, 4Tx, 4Vx, 5Dx • 2931-CTO	43R0894	N
22	CPU assembly, Intel Celeron processor T3100 (1.9 GHz) R-0 • 2842-CTO • 2847-CTO, 7Vx • 2873-CTO • 2874-CTO, 36x, 39x, 3Bx, 3Gx, 3Kx, 3Qx, 3Sx, 48x, 4Ax, 4Bx, 4Kx, 4Lx, 4Nx, 4Qx, 7Rx, 7Tx, 7Zx, 89x, 8Ax • 2875-CTO, 2Nx, 2Sx, 2Tx, 36x, 48x, 4Cx, 4Dx, 4Ex, 4Px, 4Yx, 52x, 53x, 54x, 55x, 56x, 57x, 5Kx, 5Lx • 2931-CTO	45M2815	N
22	CPU assembly, Intel Celeron processor T3300 (2.0 GHz) R-0 • 0616-CTO • 2842-CTO • 2847-CTO, BUx • 2873-CTO • 2874-CTO • 2875-CTO, 5Px, 5Qx, 5Rx, 5Sx • 2931-CTO • 5072-CTO	63Y2129	N
22	CPU assembly, Intel Celeron processor 900 (2.2 GHz) R-0 • 2842-CTO • 2847-CTO • 2873-CTO • 2874-CTO, 22x, 47x, 49x, 4Cx, 4Jx • 2875-CTO, 22x, 39x, 3Ax, 3Px, 3Xx, 46x • 2931-CTO	43R0795	N
22	CPU assembly, Intel Pentium Processor Penryn T4300 (2.1 GHz) R-0 • 2842-CTO, 8Sx, 8Tx, 8Ux, 8Vx, 8Wx, 92x, 93x, 94x, 95x, 96x, 9Ax, 9Bx, 9Cx, 9Dx, 9Ex, 9Jx, 9Kx, 9Lx, 9Mx, 9Nx, 9Sx, 9Tx, 9Ux, 9Vx, 9Wx, A2x, A3x, A4x, A5x, A6x, AMx, ANx, APx, AQx, B4x, B7x, B8x, B9x, BAx, BBx, BCx, BZx, C3x, D5x, D6x, D9x • 2847-CTO, 6Ux, 82x, 84x, 85x, 86x, 87x, 88x, 89x, 8Dx, 8Qx, 8Rx, 8Tx, 8Yx, B5x, R2x, R4x, R5x, R6x, R7x, R8x, RCx, RDx, RFx, RGx, RHx, RMx, RNx, RPx, RQx, RRx • 2874-CTO, 52x, 53x, 54x, 55x, 56x, 5Ax, 5Bx, 5Cx, 5Dx, 5Ex, 5Jx, 5Kx, 5Lx, 5Mx, 5Nx, 62x, 64x, 66x, 67x, 68x, 6Cx, 6Dx, 6Ex, 6Fx, 6Gx, 6Nx, 6Px, 6Rx, 6Tx, 6Ux, 6Wx, 6Xx, 6Yx, 6Zx, 73x, 74x, 75x, 7Qx • 2875-CTO, 25x, 27x, 29x, 2Ax, 2Cx, 2Dx, 2Fx, 2Gx, 2Hx, 2Jx, 2Kx, 2Mx, 3Zx, 5Bx, 5Hx, R2x, R3x, R4x, R5x, R6x, R7x, R8x, R9x, RAx, RBx	43R0964	N

Table 40. Parts list—Overall (continued)

No.	FRU (Overall)	FRU no.	CRU ID
22	CPU assembly, Intel Pentium Processor Penryn T4400 (2.2 GHz) R-0 • 2842-CTO, 8Xx, 8Yx, 8Zx, 97x, 98x, 99x, 9Fx, 9Gx, 9Hx, 9Px, 9Qx, 9Rx, 9Xx, 9Yx, 9Zx, A7x, A8x, A9x, ARx, ASx, ATx, AUx, B5x, BDx, BGx, C2x, C4x, CNx, D7x, D8x, DAx, EBx, ECx, EDx, EEx, EMx, ENx, EPx, EQx, FSx, FTx, FUx, FVx, FXx, G7x, G8x, G9x, GEx, GFx, GRx, H6x, H7x, J5x, J6x • 2847-CTO, 2Zx, 6Vx, 7Px, 7Ux, 83x, 8Ax, 8Sx, 9Fx, 9Kx, 9Px, A9x, APx, AVx, B6x, B7x, BBx, R3x, R9x, RAx, RBx, RJx, RKx, RLx, RSx, RTx, RUx • 2874-CTO, 57x, 58x, 59x, 5Fx, 5Gx, 5Hx, 5Px, 5Qx, 5Rx, 63x, 65x, 69x, 6Ax, 6Bx, 6Hx, 6Jx, 6Kx, 6Lx, 6Mx, 6Qx, 6Sx, 6Vx, 72x, 76x, 77x, 78x, 79x, 7Ax, 7Bx, 7Gx, 7Hx, 7Jx, 7Kx, 7Px, 7Sx, 7Ux, 7Vx, 7Wx, 7Xx, 7Yx, 82x, 83x, 84x, 87x, 8Fx, 8Gx, 8Hx, 8Jx • 2875-CTO, 26x, 28x, 2Bx, 2Ex, 2Lx, 2Px, 2Qx, 2Rx, 2Wx, 2Xx, 2Yx, 2Zx, 4Ux, 4Wx, 4Xx, 5Cx, 5Ex, RCx, RDx, RFx, RGx, RHx, RJx	63Y2061	N
22	CPU assembly, Intel Pentium Processor Penryn T4500 (2.3 GHz) R-0 • 2842-CTO, DBx, DCx, EFx, EGx, EHx, ERx, ESx, ETx, EZx, FWx, FYx, G2x, G3x, G4x, G5x, G6x, GNx, GPx, H8x, HSx, HTx, HUx, HVx, HWx, J7x, J8x, J9x, JLx, JMx, JQx, JRx, K5x, K6x, K7x, K8x, K9x, KAx, KBx, KCx, KDx, KEx, KFx, KGx, KHx, KJx, KKx, KLx, KMx, KWx, L2x, L3x, L4x, L6x, L7x • 2847-CTO, 6Wx, 6Xx, 9Lx, A5x, A6x, A7x, A8x, AAx, ABx, AGx, AHx, AWx, BSx, BTx, C3x, C4x, C5x, C6x, C8x, CAx, CBx, CCx, CDx, CEx, CFx, CUx, D5x, D6x, DCx, DDx, DEx, DFx, DLx • 2874-CTO, 7Cx, 7Dx, 7Ex, 7Fx, 7Lx, 7Mx, 7Nx, 85x, 86x, 88x, 8Bx, 8Cx, 8Dx, 8Ex, 8Kx, 8Lx, 8Mx, 8Nx • 2875-CTO, 58x, 59x, 5Ax, 5Fx, 5Gx, 5Jx, 5Mx, 5Nx	63Y2128	N
22	CPU assembly, Intel® Core™ 2 Duo mobile processor P7450 (2.13 GHz) R-0 • 2842-CTO, ABx, AEx, AZx, B2x, BFx, BPx, BSx, BTx, BWx, BXx • 2847-CTO, 7Xx, 7Zx, 8Cx, 8Jx, 8Kx, 8Lx, 8Mx, 8Wx, RWx	63Y2060	N
22	CPU assembly, Intel Core 2 Duo mobile processor P7550 (2.26 GHz) R-0 • 2842-CTO, ACx, AFx, BNx • 2847-CTO, 7Wx, 8Hx, 8Xx, RXx	63Y2059	N
22	CPU assembly, Intel Core 2 Duo mobile processor P7570 (2.26 GHz) R-0 • 2842-CTO, 25x, 26x, 27x, 28x, 2Ax, 2Bx, 2Cx, 2Dx, 3Dx, 4Bx, 4Cx, 4Dx, 5Wx, 5Xx, 6Jx, 6Kx, 6Lx, 6Mx, 6Nx, 73x, 74x, 75x, 76x, 77x, 78x, 7Gx, 7Vx, 8Dx, 8Lx, B3x, B6x, CCx, CFx, CHx, CLx, GCx, GSx, GUx, J2x • 2847-CTO, 29x, 2Ax, 2Gx, 2Hx, 36x, 39x, 4Dx, 4Ux, 5Ax, 5Bx, 5Rx, 5Sx, 5Tx, 64x, 65x, 66x, 67x, 6Ex, 6Fx, 6Jx, 6Kx, 6Qx, 7Sx, 9Ex, 9Tx, A4x, AQx, ARx, BRx, QBx, QCx, QFx • 2873-CTO • 2931-CTO	45M2816	N
22	CPU assembly, Intel Core 2 Duo mobile processor P8700 (2.53 GHz) R-0 • 2842-CTO, 4Ex, 4Fx, 5Kx, 7Cx, 7Dx, 7Fx, 7Hx, 7Jx, HYx, JNx • 2847-CTO, 22x, 2Qx, 3Vx, 3Wx, 3Xx, 3Yx, 4Qx, 4Sx, 4Vx, 4Wx, 4Xx, 4Yx, 4Zx, 52x, 53x, BQx • 2873-CTO, 22x, 32x, 33x • 2931-CTO, 23x, 24x, 25x, 26x	42W8194	N
22	CPU assembly, Intel Core 2 Duo mobile processor P8800 (2.66 GHz) R-0 • 0616-CTO, 29x • 2842-CTO, 4Gx • 2847-CTO, 23x, 4Rx • 2873-CTO • 2931-CTO, 2Bx • 5072-CTO	45M2814	N

Table 40. Parts list—Overall (continued)

No.	FRU (Overall)	FRU no.	CRU ID
22	CPU assembly, Intel Core 2 Duo mobile processor T5870 (2.0 GHz) M-0 • 2842-CTO, 23x, 24x, 33x, 34x, 3Bx, 3Fx, 3Gx, 3Px, 3Rx, 3Sx, 3Tx, 3Ux, 3Vx, 42x, 43x, 45x, 46x, 4Hx, 4Jx, 4Mx, 4Px, 4Qx, 4Tx, 4Ux, 4Vx, 4Yx, 4Zx, 52x, 53x, 54x, 57x, 59x, 5Ax, 5Bx, 5Cx, 5Gx, 5Hx, 5Lx, 5Mx, 5Nx, 5Px, 5Yx, 5Zx, 64x, 66x, 67x, 68x, 69x, 6Ax, 6Bx, 6Px, 6Qx, 6Rx, 6Sx, 6Tx, 6Ux, 7Ex, 7Px, 7Qx, 7Rx, 7Sx, 7Yx, 7Zx, 84x, 87x, 88x, 89x, 8Ax, 8Ex, 8Fx, 8Gx, 8Hx, 8Mx, 8Nx, AGx, AHx, AJx, AKx, ALx, C5x, C7x, C8x, CDx, CJx, DPx, DQx, E2x, E8x, F5x • 2847-CTO, 24x, 25x, 2Bx, 2Cx, 2Jx, 2Kx, 2Lx, 2Mx, 2Nx, 2Rx, 2Sx, 2Tx, 2Ux, 2Vx, 33x, 37x, 3Kx, 3Lx, 3Qx, 42x, 43x, 44x, 45x, 46x, 47x, 48x, 4Ax, 4Bx, 4Ex, 4Fx, 4Jx, 54x, 55x, 56x, 57x, 58x, 59x, 5Cx, 5Ex, 5Fx, 5Hx, 5Jx, 5Kx, 5Lx, 5Mx, 5Ux, 5Vx, 5Wx, 5Xx, 5Yx, 68x, 69x, 6Ax, 6Bx, 6Lx, 6Mx, 72x, 73x, 74x, 75x, 7Ax, 7Dx, 7Ex, 7Fx, 7Jx, 9Jx, Q5x, Q6x, Q7x, Q8x, Q9x, QAx, QDx, QGx, QHx • 2873-CTO • 2931-CTO	43N7739	N
22	CPU assembly, Intel Core 2 Duo mobile processor T6570 (2.1 GHz) R-0 • 0616-CTO • 2842-CTO, CMx, CPx, CQx, CRx, CSx, CUx, CVx, CWx, DDx, DEx, DFx, DGx, DHx, DJx, DKx, DLx, DMx, DNx, DVx, DWx, DXx, DYx, DZx, E4x, E7x, EAx, EJx, EKx, ELx, EUx, EVx, EWx, EXx, EYx, F2x, F3x, F7x, F8x, FAx, FBx, FCx, FDx, FEx, FFx, FGx, FHx, FJx, FKx, FLx, FMx, FNx, FPx, FQx, FZx, GBx, GDx, GGx, GHx, GJx, GKx, GLx, GMx, GQx, GTx, GVx, GWx, GXx, GYx, GZx, H2x, H3x, H9x, HAx, HBx, HCx, HDx, HEx, HFx, HGx, HJx, HMx, HNx, HPx, HQx, HRx, HXx, J4x, JAx • 2847-CTO, 2Wx, 2Xx, 2Yx, 3Zx, 6Nx, 6Px, 6Rx, 6Sx, 6Tx, 6Yx, 6Zx, 7Kx, 7Lx, 7Mx, 7Nx, 7Qx, 7Rx, 7Tx, 92x, 93x, 94x, 95x, 96x, 97x, 98x, 99x, 9Ax, 9Bx, 9Cx, 9Dx, 9Mx, 9Nx, 9Qx, 9Rx, 9Sx, 9Ux, 9Vx, 9Wx, 9Xx, A2x, A3x, ACx, ADx, AEx, AFx, AJx, AKx, ALx, AMx, ANx, ATx, AUx, AXx, AYx, AZx, B2x, B3x, B4x, B8x, B9x, BAx, BJx, BKx, BMx, BNx, BPx, C9x • 2873-CTO • 2931-CTO • 5072-CTO	42W8193	N
22	CPU assembly, Intel Core 2 Duo mobile processor T6600 (2.2 GHz) R-0 • 2842-CTO, AAx, ADx, AVx, AWx, AXx, AYx, BEx, BHx, BJx, BKx, BMx, BQx, BRx, BUx, BVx, BYx, E5x, E6x • 2847-CTO, 7Yx, 8Bx, 8Ex, 8Fx, 8Gx, 8Nx, 8Px, 8Ux, 8Vx, 8Zx, RVx	43N8584	N
22	CPU assembly, Intel Core 2 Duo mobile processor T6670 (2.2 GHz) R-0 • 0616-CTO, 22x, 25x, 26x, 2Cx • 2842-CTO, 22x, 29x, 2Ex, 35x, 36x, 37x, 39x, 3Hx, 3Qx, 44x, 47x, 48x, 49x, 4Ax, 4Kx, 4Lx, 4Nx, 4Rx, 4Sx, 4Wx, 4Xx, 55x, 56x, 58x, 5Dx, 5Ex, 5Fx, 5Jx, 5Qx, 5Rx, 5Sx, 5Tx, 5Ux, 5Vx, 62x, 63x, 65x, 6Cx, 6Dx, 6Ex, 6Fx, 6Gx, 6Hx, 6Vx, 6Wx, 6Xx, 6Yx, 6Zx, 72x, 7Bx, 7Tx, 7Ux, 7Wx, 7Xx, 82x, 83x, 85x, 86x, 8Bx, 8Cx, 8Jx, 8Kx, 8Rx, C6x, C9x, CAx, CBx, CEx, CGx, CKx, CXx, CYx, CZx, D2x, D3x, D4x, DRx, DSx, DTx, DUx, E3x, E9x, F4x, F6x, F9x, H4x, H5x, HHx, HKx, HLx, J3x, JBx, JCx, JDx, JEx, JFx, JGx, JHx, JJx, JKx, JPx, JTx, JUx, JVx, JWx, JXx, JYx, JZx, K2x, K3x, K4x, KNx, KPx, KQx, KRx, KSx, KTx, KUx, KVx, KXx, KYx, KZx, L5x • 2847-CTO, 26x, 27x, 28x, 2Dx, 2Ex, 2Fx, 2Px, 34x, 35x, 38x, 3Dx, 3Ex, 3Mx, 3Nx, 3Px, 49x, 4Cx, 4Gx, 4Hx, 4Nx, 4Px, 4Tx, 5Dx, 5Gx, 5Nx, 5Px, 5Qx, 5Zx, 62x, 63x, 6Cx, 6Dx, 6Gx, 6Hx, 76x, 77x, 78x, 79x, 7Bx, 7Cx, 9Gx, 9Hx, 9Yx, 9Zx, ASx, BCx, BDx, BEx, BFx, BGx, BHx, BVx, BWx, BXx, BYx, BZx, C2x, C7x, CGx, CHx, CJx, CKx, CLx, CMx, CNx, CPx, CQx, CRx, CSx, CVx, CWx, CXx, CYx, CZx, D2x, D3x, D7x, D8x, DBx, DGx, DHx, DJx, DKx, Q2x, Q3x, Q4x, QEx, QJx • 2873-CTO • 2931-CTO, 27x, 28x, 29x • 5072-CTO	45M2817	N

Table 40. Parts list—Overall (continued)

No.	FRU (Overall)	FRU no.	CRU ID
22	CPU assembly, Intel Core 2 Duo mobile processor T9600 (2.80 GHz) E-0 • 2842-CTO, HZx • 2847-CTO • 2873-CTO • 2931-CTO, 22x	42W8290	N
22	CPU assembly, Intel Core 2 Duo processor Penryn P8400 (2.26GHz) R-0 • 0616-CTO • 2842-CTO • 2847-CTO • 2873-CTO • 2931-CTO • 5072-CTO	42W8286	N
22	CPU assembly, Intel Core 2 Duo processor Penryn P8600 (2.4GHz) R-0 • 0616-CTO, 27x, 28x • 2842-CTO, JSx • 2847-CTO • 2873-CTO • 2931-CTO, 2Ax • 5072-CTO	42W8287	N
22	CPU assembly, Intel Celeron processor Penryn DC T3500 (2.1GHz) R-0 • 0616-CTO, 2Dx • 2842-CTO • 2847-CTO, D4x, D9x, DAx • 2873-CTO • 2931-CTO • 5072-CTO	04W0375	N
22	CPU assembly, Intel Celeron processor P4500 (1.86 GHz) C2 • 0530-CTO, 5Ex, 5Fx, 5Gx, 5Lx, 5Mx, 5Nx • 0553-CTO, 5Dx, 5Zx, 62x, 63x • 0585-CTO, 57x, 58x, 5Ax • 0591-CTO • 4403-CTO, 43x, 44x, 45x, 59x, 5Nx • 4404-CTO • 2550-CTO, 57x, 58x, 5Ax • 2597-CTO, 5Dx, 5Ex, 5Fx, 5Gx, 5Hx, 5Jx • 2598-CTO, 67x, 68x, 69x • 2599-CTO • 4444-CTO, 3Ex, 3Fx, 3Gx • 4447-CTO	63Y2177	N
22	CPU assembly, Intel® Core™ i3-330M Processor (2.13 GHz) • 0530-CTO, 22x, 32x, 52x, 53x, 54x, 5Bx, 5Cx, 5Dx, 5Px, 5Qx, 5Rx, 5Vx, 5Zx, 62x, 64x, 65x • 0553-CTO, 5Tx, 5Ux, 5Yx, 64x, 65x, 66x, 6Fx, 6Hx, 6Kx, 6Mx, 6Sx • 0585-CTO, 5Bx, 5Dx • 0591-CTO • 4403-CTO, 35x, 37x, 3Ax, 3Bx, 3Cx, 3Dx, 3Yx, 3Zx, 42x, 48x, 49x, 4Ax • 4404-CTO, 36x, 37x • 2550-CTO, 5Bx, 5Dx • 2597-CTO, 22x, 32x, 52x, 53x, 5Ax, 5Bx, 5Cx, 5Kx, 5Lx, 5Mx, 5Vx, 5Xx, 5Zx, 62x • 2598-CTO, 5Vx, 5Wx, 62x, 63x, 65x, 6Ax, 6Bx, 6Cx • 2599-CTO • 4444-CTO, 35x, 36x, 3Bx, 3Cx, 3Dx, 3Kx, 3Lx, 3Px • 4447-CTO, 34x, 35x	63Y2174	N

Table 40. Parts list—Overall (continued)

No.	FRU (Overall)	FRU no.	CRU ID
22	CPU assembly, Intel Core i3-350M Processor (2.26 GHz) • 0530-CTO, 5Ax, 5Sx, 5Tx, 5Ux, 5Wx, 68x, 69x, 6Hx • 0553-CTO, 67x, 68x, 69x, 6Vx, 6Wx, 74x, 7Bx, 7Vx • 0585-CTO, 5Fx, 5Hx, 6Mx, 74x • 0591-CTO • 4403-CTO, 32x, 33x, 38x, 3Ex, 3Fx, 3Gx, 3Hx, 3Xx, 47x, 4Nx, 4Rx, 4Wx, 4Xx, 4Yx, 55x, 56x, 5Bx, 5Cx, 5Qx, 5Rx, 5Sx, 64x, 67x, 6Bx • 4404-CTO, 32x, 38x, 39x, 3Kx, 3Xx, 3Yx, 3Zx, 42x, 49x, 4Ax, 4Bx, 4Cx • 2550-CTO, 5Fx, 5Hx, 63x • 2597-CTO, 59x, 5Nx, 5Px, 5Qx, 5Sx, 6Lx, 6Mx, 6Nx • 2598-CTO, 6Dx, 6Ex, 6Fx, 6Qx, 6Rx, 73x • 2599-CTO • 4444-CTO, 32x, 33x, 37x, 3Ax, 3Jx, 3Vx, 3Yx, 45x, 46x, 49x, 4Bx, 4Gx • 4447-CTO, 32x, 36x, 37x, 7Lx, 7Mx, 7Nx, 7Px	63Y2175	N
22	CPU assembly, Intel Core i3-350M Arrandale (2.26GHz) K0 • 0530-CTO, 5Ax, 5Sx, 5Tx, 5Ux, 5Wx, 68x, 69x, 6Hx • 0553-CTO, 67x, 68x, 69x, 6Vx, 6Wx, 74x, 7Bx, 7Vx • 0585-CTO, 5Fx, 5Hx, 6Mx, 74x • 0591-CTO • 4403-CTO, 32x, 33x, 38x, 3Ex, 3Fx, 3Gx, 3Hx, 3Xx, 47x, 4Nx, 4Rx, 4Wx, 4Xx, 4Yx, 55x, 56x, 5Bx, 5Cx, 5Qx, 5Rx, 5Sx, 64x, 67x, 6Bx • 4404-CTO, 32x, 38x, 39x, 3Kx, 3Xx, 3Yx, 3Zx, 42x, 49x, 4Ax, 4Bx, 4Cx • 2550-CTO, 5Fx, 5Hx, 63x • 2597-CTO, 59x, 5Nx, 5Px, 5Qx, 5Sx, 6Lx, 6Mx, 6Nx • 2598-CTO, 6Dx, 6Ex, 6Fx, 6Qx, 6Rx, 73x • 2599-CTO • 4444-CTO, 32x, 33x, 37x, 3Ax, 3Jx, 3Vx, 3Yx, 45x, 46x, 49x, 4Bx, 4Gx • 4447-CTO, 32x, 36x, 37x, 7Lx, 7Mx, 7Nx, 7Px	63Y1510	N
22	CPU assembly, Intel Core i5-430M Processor (2.26 GHz) • 0530-CTO, 55x, 56x, 59x, 5Kx, 5Xx, 66x, 67x • 0553-CTO, 6Dx, R2x • 0585-CTO, 5Kx, 5Mx • 0591-CTO • 4403-CTO, 39x, 3Jx, 3Kx, 3Lx, 3Mx, 3Wx, 46x, 65x • 4404-CTO, 3Ax, 3Bx • 2550-CTO, 5Kx, 5Mx • 2597-CTO, 54x, 55x, 58x, 5Rx, 5Tx, 5Wx, 63x, 64x, 65x • 2598-CTO, 6Gx, 6Px, R2x • 2599-CTO • 4444-CTO, 38x, 39x, 3Hx, 4Cx • 4447-CTO, 38x, 39x	63Y2176	N

Table 40. Parts list—Overall (continued)

No.	FRU (Overall)	FRU no.	CRU ID
22	CPU assembly, Intel Core i5-520M Processor (2.40 GHz) • 0530-CTO, 57x, 5Jx, 63x, 6Mx, 6Nx • 0553-CTO, 22x, 24x, 25x, 33x, 35x, 42x, 43x, 52x, 53x, 54x, 55x, 56x, 58x, 5Ax, 5Gx, 5Hx, 5Jx, 5Kx, 5Lx, 5Mx, 5Vx, 5Wx, 5Xx, 6Bx, 6Cx, 6Gx, 6Jx, 6Nx, 6Px, 6Rx, 6Tx, 6Ux, 6Xx, 6Yx, 72x, 73x, 75x, 76x, 79x, 7Dx, 7Ex, 7Fx, 7Gx, 7Zx, 82x, R3x • 0585-CTO, 42x, 43x, 52x, 54x, 59x, 5Px, 5Rx, 5Yx, 64x, 6Jx, 6Px, 6Rx, 6Xx, 6Yx, 75x, 76x • 0591-CTO, 52x, 53x • 4403-CTO, 34x, 36x, 3Nx, 3Px, 3Qx, 3Rx, 4Bx, 4Cx, 4Dx, 4Ex, 4Mx, 57x, 58x, 5Lx, 5Xx, 5Yx, 5Zx, 6Zx, 74x, 77x • 4404-CTO, 33x, 34x, 3Cx, 3Dx, 3Jx, 3Lx, 4Gx, 4Hx • 2550-CTO, 42x, 43x, 52x, 53x, 54x, 59x, 5Px, 5Rx, 5Xx, 5Yx, 5Zx, 68x, 6Nx, 6Sx, 6Tx • 2597-CTO, 56x, 5Yx, 69x, 6Px • 2598-CTO, 22x, 24x, 25x, 33x, 34x, 35x, 42x, 43x, 52x, 53x, 54x, 56x, 5Cx, 5Dx, 5Ex, 5Fx, 5Gx, 5Hx, 5Jx, 5Kx, 5Lx, 5Xx, 5Yx, 5Zx, 64x, 6Jx, 6Lx, 6Nx, 6Sx, 6Tx, 6Vx, 6Zx, 72x, 75x, 76x, 77x, 78x, 7Rx, 7Sx, R3x • 2599-CTO, 52x • 4444-CTO, 34x, 3Qx, 3Sx, 3Zx, 52x, 54x, 55x, 56x, 57x • 4447-CTO, 33x, 3Ax, 3Bx, 3Ex, 3Gx,	60Y5731	N
22	CPU assembly, Intel Core i5-520M Arrandale (2.40GHz) K0 • 0530-CTO, 57x, 5Jx, 63x, 6Mx, 6Nx • 0553-CTO, 22x, 24x, 25x, 33x, 35x, 42x, 43x, 52x, 53x, 54x, 55x, 56x, 58x, 5Ax, 5Gx, 5Hx, 5Jx, 5Kx, 5Lx, 5Mx, 5Vx, 5Wx, 5Xx, 6Bx, 6Cx, 6Gx, 6Jx, 6Nx, 6Px, 6Rx, 6Tx, 6Ux, 6Xx, 6Yx, 72x, 73x, 75x, 76x, 79x, 7Dx, 7Ex, 7Fx, 7Gx, 7Zx, 82x, R3x • 0585-CTO, 42x, 43x, 52x, 54x, 59x, 5Px, 5Rx, 5Yx, 64x, 6Jx, 6Px, 6Rx, 6Xx, 6Yx, 75x, 76x • 0591-CTO, 52x, 53x • 4403-CTO, 34x, 36x, 3Nx, 3Px, 3Qx, 3Rx, 4Bx, 4Cx, 4Dx, 4Ex, 4Mx, 57x, 58x, 5Lx, 5Xx, 5Yx, 5Zx, 6Zx, 74x, 77x • 4404-CTO, 33x, 34x, 3Cx, 3Dx, 3Jx, 3Lx, 4Gx, 4Hx • 2550-CTO, 42x, 43x, 52x, 53x, 54x, 59x, 5Px, 5Rx, 5Xx, 5Yx, 5Zx, 68x, 6Nx, 6Sx, 6Tx • 2597-CTO, 56x, 5Yx, 69x, 6Px • 2598-CTO, 22x, 24x, 25x, 33x, 34x, 35x, 42x, 43x, 52x, 53x, 54x, 56x, 5Cx, 5Dx, 5Ex, 5Fx, 5Gx, 5Hx, 5Jx, 5Kx, 5Lx, 5Xx, 5Yx, 5Zx, 64x, 6Jx, 6Lx, 6Nx, 6Sx, 6Tx, 6Vx, 6Zx, 72x, 75x, 76x, 77x, 78x, 7Rx, 7Sx, R3x • 2599-CTO, 52x • 4444-CTO, 34x, 3Qx, 3Sx, 3Zx, 52x, 54x, 55x, 56x, 57x • 4447-CTO, 33x, 3Ax, 3Bx, 3Ex, 3Gx,	63Y1513	N

Table 40. Parts list—Overall (continued)

No.	FRU (Overall)	FRU no.	CRU ID
22	CPU assembly, Intel Core i5-540M Processor (2.53 GHz) • 0530-CTO • 0553-CTO, 36x, 44x, 57x, 59x, 5Bx, 5Cx, 5Ex, 5Fx, 5Nx, 5Px, 5Qx, 5Rx, 6Lx, 6Qx, 6Zx, 77x, 78x, 7Ax, 7Hx, 7Jx, 7Kx, 7Lx, 83x • 0585-CTO, 44x, 53x, 55x, 56x, 5Tx, 5Vx, 65x, 66x, 6Qx, 6Sx, 6Zx • 0591-CTO • 4403-CTO, 3Sx, 3Tx, 3Ux, 3Vx, 4Fx, 4Gx, 4Hx, 4Jx, 5Mx, 62x, 63x, 6Ux • 4404-CTO, 35x, 3Ex, 3Fx, 4Jx, 4Kx, 4Wx • 2550-CTO, 44x, 55x, 5Tx, 5Vx, 62x, 6Ax, 6Ux • 2597-CTO • 2598-CTO, 44x, 55x, 57x, 58x, 59x, 5Ax, 5Bx, 5Mx, 5Nx, 5Px, 5Qx, 5Rx, 5Sx, 5Tx, 66x, 6Kx, 6Ux, 6Wx, 6Xx, 6Yx, 79x, 7Ax, 7Bx, 7Cx, 7Dx, 7Tx • 2599-CTO, 53x • 4444-CTO, 3Tx • 4447-CTO, 3Cx, 3Dx	60Y5732	N
22	CPU assembly, Intel Core i5-540M Arrandale (2.53GHz) K0 • 0530-CTO • 0553-CTO, 36x, 44x, 57x, 59x, 5Bx, 5Cx, 5Ex, 5Fx, 5Nx, 5Px, 5Qx, 5Rx, 6Lx, 6Qx, 6Zx, 77x, 78x, 7Ax, 7Hx, 7Jx, 7Kx, 7Lx, 83x • 0585-CTO, 44x, 53x, 55x, 56x, 5Tx, 5Vx, 65x, 66x, 6Qx, 6Sx, 6Zx • 0591-CTO • 4403-CTO, 3Sx, 3Tx, 3Ux, 3Vx, 4Fx, 4Gx, 4Hx, 4Jx, 5Mx, 62x, 63x, 6Ux • 4404-CTO, 35x, 3Ex, 3Fx, 4Jx, 4Kx, 4Wx • 2550-CTO, 44x, 55x, 5Tx, 5Vx, 62x, 6Ax, 6Ux • 2597-CTO • 2598-CTO, 44x, 55x, 57x, 58x, 59x, 5Ax, 5Bx, 5Mx, 5Nx, 5Px, 5Qx, 5Rx, 5Sx, 5Tx, 66x, 6Kx, 6Ux, 6Wx, 6Xx, 6Yx, 79x, 7Ax, 7Bx, 7Cx, 7Dx, 7Tx • 2599-CTO, 53x • 4444-CTO, 3Tx • 4447-CTO, 3Cx, 3Dx	63Y1512	N
22	CPU assembly, Intel Core i7-620M Processor (2.66 GHz) • 0530-CTO • 0553-CTO, 84x • 0585-CTO • 0591-CTO • 4403-CTO, 6Xx • 4404-CTO, 4Zx • 2550-CTO • 2597-CTO • 2598-CTO, 7Ux • 2599-CTO • 4444-CTO, 4Zx • 4447-CTO	60Y5733	N
22	CPU assembly, Intel Core i7-620M Arrandale (2.66GHz) K0 • 0530-CTO • 0553-CTO, 84x • 0585-CTO • 0591-CTO • 4403-CTO, 6Xx • 4404-CTO, 4Zx • 2550-CTO • 2597-CTO • 2598-CTO, 7Ux • 2599-CTO • 4444-CTO, 4Zx • 4447-CTO	63Y1511	N

Table 40. Parts list—Overall (continued)

No.	FRU (Overall)	FRU no.	CRU ID
22	CPU assembly, Intel Core i3-370M Arrandale (2.40GHz) K0 • 0530-CTO, 6Bx, 6Dx, 6Jx, 6Lx • 0553-CTO, 7Nx, 7Qx, 7Rx, 7Tx, 7Wx, 7Yx, 89x • 0585-CTO, 68x, 6Ax, 6Cx, 6Ex, 6Gx, 6Lx, 6Tx • 0591-CTO • 4403-CTO, 4Kx, 4Vx, 54x, 5Dx, 5Ex, 5Fx, 5Gx, 5Tx, 5Ux, 5Vx, 5Wx, 68x, 69x, 6Fx • 4404-CTO, 3Gx, 3Hx, 3Mx, 3Px, 3Rx, 3Tx, 3Vx, 43x, 44x, 45x, 4Dx, 4Ex, 4Fx, 4Lx • 2550-CTO, 64x, 66x, 67x • 2597-CTO, 66x, 6Ex, 6Gx, 6Qx • 2598-CTO, 7Gx, 7Jx, 7Qx • 2599-CTO • 4444-CTO, 3Mx, 3Nx, 3Ux, 44x, 4Ax, 4Ex, 4Fx, 4Kx • 4447-CTO, 3Fx, 3Hx	75Y4905	N
22	CPU assembly, Intel Core i5-450M Arrandale (2.40GHz) K0 • 0530-CTO, 6Ax, 6Cx, 6Ex, 6Fx, 6Gx, 6Kx • 0553-CTO, 7Cx, 7Mx, 7Px, 7Sx, 7Ux, 7Xx • 0585-CTO, 67x, 69x, 6Bx, 6Dx, 6Fx, 6Hx, 6Kx, 6Ux • 0591-CTO • 4403-CTO, 4Lx, 4Px, 4Sx, 4Ux, 53x, 5Hx, 5Jx, 5Kx, 66x, 6Ax • 4404-CTO, 3Nx, 3Qx, 3Sx, 3Ux, 3Wx, 46x, 47x, 48x • 2550-CTO, 65x, 69x • 2597-CTO, 67x, 68x, 6Ax, 6Bx, 6Cx, 6Dx, 6Fx, 6Hx • 2598-CTO, 74x, 7Ex, 7Fx, 7Hx, 7Kx • 2599-CTO • 4444-CTO, 3Rx, 3Wx, 43x, 4Dx, 4Hx • 4447-CTO	75Y4906	N
22	CPU assembly, Intel Pentium P6000 Arrandale (1.86GHz) C2 • 0530-CTO • 0553-CTO • 0585-CTO, 6Nx • 0591-CTO • 4403-CTO, 4Tx, 4Zx, 52x, 5Ax, 5Px • 4404-CTO • 2550-CTO • 2597-CTO, 6Jx, 6Kx • 2598-CTO • 2599-CTO • 4444-CTO, 42x, 47x, 48x • 4447-CTO	75Y4910	N
22	CPU assembly, Intel Core i5-580M Arrandale (2.66GHz) K0 • 0530-CTO • 0553-CTO • 0585-CTO • 0591-CTO • 4403-CTO, 73x, 75x, 76x • 4404-CTO • 2550-CTO • 2597-CTO • 2598-CTO • 2599-CTO • 4444-CTO, 4Xx, 58x, 5Bx, 5Cx • 4447-CTO	04W0306	N

Table 40. Parts list—Overall (continued)

No.	FRU (Overall)	FRU no.	CRU ID
22	CPU assembly, Intel Core i3-380M Arrandale (2.53GHz) K0 • 0530-CTO • 0553-CTO • 0585-CTO, 77x • 0591-CTO • 4403-CTO, 6Gx, 6Qx, 6Rx, 72x • 4404-CTO, 4Mx, 4Sx, 4Tx • 2550-CTO • 2597-CTO • 2598-CTO • 2599-CTO • 4444-CTO, 4Sx, 4Wx, 5Ax • 4447-CTO	04W0336	N
22	CPU assembly, Intel Core i5-460M Arrandale (2.53GHz) K0 • 0530-CTO • 0553-CTO • 0585-CTO • 0591-CTO • 4403-CTO • 4404-CTO • 2550-CTO • 2597-CTO • 2598-CTO • 2599-CTO • 4444-CTO • 4447-CTO	04W0337	N
22	CPU assembly, Intel Core i5-560M Arrandale (2.66GHz) K0 • 0530-CTO • 0553-CTO, 8Ax, 8Bx • 0585-CTO • 0591-CTO • 4403-CTO, 6Hx, 6Jx, 6Sx, 6Tx • 4404-CTO, 4Nx, 4Ux, 4Vx • 2550-CTO • 2597-CTO • 2598-CTO, 82x, 83x • 2599-CTO • 4444-CTO, 4Jx, 4Nx, 4Px • 4447-CTO	04W0338	N
22	CPU assembly, Intel Pentium P6100 Arrandale (2.0GHz) K0 • 0530-CTO • 0553-CTO • 0585-CTO • 0591-CTO • 4403-CTO, 6Dx, 6Ex, 6Nx • 4404-CTO, 4Qx • 2550-CTO • 2597-CTO • 2598-CTO • 2599-CTO • 4444-CTO, 4Tx • 4447-CTO	04W0339	N

Table 40. Parts list—Overall (continued)

No.	FRU (Overall)	FRU no.	CRU ID
22	CPU assembly, Intel Pentium P6200 Arrandale (2.13GHz) K0 • 0530-CTO • 0553-CTO • 0585-CTO • 0591-CTO • 4403-CTO, 6Mx, 6Px • 4404-CTO, 4Rx • 2550-CTO • 2597-CTO • 2598-CTO • 2599-CTO • 4444-CTO, 4Ux • 4447-CTO	04W0340	N
22	CPU assembly, Intel Celeron P4600 Arrandale (2.0GHz) K0 • 0530-CTO • 0553-CTO, 85x • 0585-CTO • 0591-CTO • 4403-CTO, 6Lx • 4404-CTO • 2550-CTO • 2597-CTO • 2598-CTO, 7Vx • 2599-CTO • 4444-CTO, 4Rx • 4447-CTO	04W0341	N

Table 40. Parts list—Overall (continued)

No.	FRU (Overall)	FRU no.	CRU ID
23	*Bluetooth* daughter card (BDC-2.1) • 0616-CTO, 22x, 25x, 26x, 27x, 28x, 29x, 2Cx, 2Dx • 2842-CTO, 25x, 26x, 27x, 28x, 29x, 2Ax, 2Bx, 2Cx, 2Dx, 2Ex, 33x, 34x, 35x, 36x, 37x, 39x, 3Bx, 3Dx, 3Gx, 3Hx, 3Px, 3Qx, 3Rx, 3Sx, 3Tx, 3Ux, 3Vx, 42x, 43x, 45x, 46x, 47x, 48x, 49x, 4Ax, 4Bx, 4Cx, 4Dx, 4Ex, 4Fx, 4Gx, 4Hx, 4Jx, 4Kx, 4Lx, 4Mx, 4Nx, 4Px, 4Qx, 4Rx, 4Sx, 4Tx, 5Ex, 5Fx, 5Jx, 5Kx, 5Lx, 5Mx, 5Nx, 5Px, 5Qx, 5Rx, 5Sx, 5Tx, 5Ux, 5Vx, 5Wx, 5Xx, 5Yx, 5Zx, 62x, 63x, 64x, 65x, 7Bx, 7Cx, 7Dx, 7Ex, 7Fx, 7Gx, 7Hx, 7Jx, 7Qx, 7Rx, 7Sx, 7Tx, 7Ux, 7Vx, 7Wx, 7Xx, 7Yx, 7Zx, 82x, 83x, 84x, 85x, 86x, 8Rx, 9Ax, 9Bx, 9Cx, 9Dx, 9Ex, 9Fx, 9Gx, 9Hx, A2x, A3x, A4x, A5x, A6x, A7x, A8x, A9x, AGx, AHx, AJx, AKx, AMx, ANx, APx, AQx, ARx, ASx, ATx, AUx, AVx, AWx, AXx, AYx, AZx, B2x, B3x, B4x, B5x, B6x, B7x, B8x, B9x, BAx, BBx, BCx, BDx, BEx, BFx, BGx, BHx, BJx, BKx, BMx, BNx, BPx, BQx, BRx, BSx, BTx, BUx, BVx, BWx, BXx, BYx, BZx, C2x, C3x, C4x, C5x, C6x, C7x, C8x, C9x, CAx, CBx, CCx, CDx, CEx, CFx, CGx, CHx, CJx, CKx, CLx, CMx, CNx, CPx, CQx, CRx, CSx, CUx, CVx, CWx, CXx, CYx, CZx, D2x, D3x, D4x, D5x, D6x, D7x, D8x, D9x, DAx, DBx, DCx, DDx, DEx, DFx, DGx, DHx, DJx, DKx, DLx, DMx, DNx, DPx, DQx, DRx, DSx, DTx, DUx, DVx, DWx, DXx, DYx, DZx, E2x, E3x, E4x, E5x, E6x, E7x, E8x, E9x, EAx, EFx, EGx, EHx, EJx, EKx, ELx, ERx, ESx, ETx, EUx, EVx, EWx, EXx, EYx, EZx, F2x, F3x, F4x, F5x, F6x, F9x, FCx, FDx, FEx, FFx, FGx, FHx, FJx, FKx, FLx, FMx, FNx, FPx, FQx, FSx, FTx, FUx, FVx, FWx, FXx, FYx, FZx, G2x, G3x, G4x, G5x, G6x, G7x, G8x, G9x, GBx, GCx, GDx, GEx, GFx, GGx, GHx, GJx, GKx, GLx, GMx, GNx, GPx, GQx, GRx, GSx, GTx, GUx, GVx, GWx, GXx, GYx, GZx, H2x, H3x, H4x, H5x, H6x, H7x, H8x, H9x, HAx, HBx, HCx, HDx, HFx, HGx, HHx, HJx, HKx, HLx, HMx, HNx, HPx, HQx, HRx, HWx, HXx, HYx, HZx, J2x, J3x, J4x, JDx, JEx, JFx, JGx, JHx, JJx, JKx, JLx, JNx, JPx, JQx, JSx, JTx, JUx, JVx, JWx, JXx, JYx, JZx, K2x, KBx, KCx, KLx, KMx, KNx, KPx, KQx, KRx, KSx, KTx, KUx, KXx, KYx, KZx • 2847-CTO, 22x, 23x, 24x, 25x, 26x, 27x, 28x, 29x, 2Ax, 2Bx, 2Cx, 2Dx, 2Ex, 2Fx, 2Gx, 2Hx, 2Lx, 2Px, 2Qx, 2Wx, 2Xx, 2Yx, 2Zx, 33x, 34x, 35x, 36x, 37x, 38x, 3Dx, 3Ex, 3Kx, 3Lx, 3Mx, 3Nx, 3Px, 3Qx, 42x, 43x, 44x, 45x, 46x, 47x, 48x, 49x, 4Ex, 4Fx, 4Gx, 4Jx, 4Nx, 4Px, 4Qx, 4Rx, 4Sx, 4Tx, 4Ux, 4Vx, 4Wx, 54x, 55x, 56x, 57x, 58x, 59x, 5Ax, 5Bx, 5Cx, 5Dx, 5Ex, 5Fx, 5Gx, 68x, 69x, 6Ax, 6Bx, 6Cx, 6Dx, 6Ex, 6Fx, 6Jx, 6Kx, 6Lx, 6Mx, 6Nx, 6Px, 6Qx, 6Rx, 6Sx, 6Tx, 6Ux, 6Vx, 6Wx, 6Xx, 6Yx, 6Zx, 73x, 74x, 75x, 76x, 77x, 78x, 79x, 7Jx, 7Kx, 7Lx, 7Mx, 7Nx, 7Px, 7Qx, 7Rx, 7Sx, 7Ux, 7Wx, 7Xx, 7Yx, 7Zx, 82x, 83x, 84x, 85x, 86x, 87x, 88x, 89x, 8Ax, 8Bx, 8Cx, 8Dx, 8Ex, 8Fx, 8Gx, 8Hx, 8Jx, 8Kx, 8Lx, 8Mx, 8Nx, 8Px, 8Qx, 8Rx, 8Sx, 8Tx, 8Ux, 8Vx, 8Wx, 8Xx, 8Yx, 8Zx, 92x, 93x, 94x, 95x, 96x, 97x, 98x, 99x, 9Ax, 9Bx, 9Cx, 9Dx, 9Ex, 9Fx, 9Gx, 9Hx, 9Jx, 9Kx, 9Lx, 9Nx, 9Px, 9Qx, 9Rx, 9Sx, 9Tx, 9Vx, 9Yx, A2x, A3x, A4x, A5x, A6x, A7x, A8x, A9x, AAx, ABx, ACx, ADx, AEx, AFx, AGx, AHx, AJx, AKx, ALx, AMx, ANx, APx, AQx, ARx, ASx, ATx, AUx, AVx, AWx, AXx, AYx, B2x, B3x, B5x, B6x, B7x, B8x, B9x, BAx, BBx, BCx, BDx, BEx, BFx, BGx, BHx, BJx, BKx, BMx, BNx, BPx, BQx, BRx, BSx, BTx, BUx, BVx, BWx, BXx, BYx, BZx, C2x, C8x, C9x, CGx, CHx, CJx, CKx, CLx, CMx, CNx, CPx, CQx, CRx, CSx, CUx, CVx, CWx, CXx, CYx, D3x, D5x, D6x, D7x, D8x, D9x, DAx, DBx, DCx, DEx, DFx, DGx, DHx, Q2x, Q3x, Q4x, Q5x, Q6x, Q7x, Q8x, Q9x, QAx, QBx, QCx, QDx, QEx, QFx, QJx, RMx, RNx, RPx, RQx, RRx, RSx, RTx, RUx • 2873-CTO, 22x, 32x, 33x (to be continued)	60Y3199	N

Table 40. Parts list—Overall (continued)

No.	FRU (Overall)	FRU no.	CRU ID
23	(continued) *Bluetooth* daughter card (BDC-2.1) • 2874-CTO, 34x, 35x, 36x, 37x, 39x, 3Bx, 3Ex, 3Gx, 3Kx, 3Lx, 3Mx, 3Nx, 46x, 47x, 48x, 49x, 4Ax, 4Bx, 4Dx, 4Fx, 4Gx, 4Hx, 4Jx, 4Kx, 4Lx, 5Jx, 5Kx, 5Lx, 5Mx, 5Nx, 5Px, 5Qx, 5Rx, 62x, 63x, 64x, 65x, 66x, 67x, 68x, 69x, 6Ax, 6Bx, 6Cx, 6Dx, 6Ex, 6Fx, 6Gx, 6Hx, 6Jx, 6Kx, 6Lx, 6Mx, 6Nx, 6Px, 6Qx, 6Rx, 6Sx, 6Tx, 6Ux, 6Vx, 6Wx, 6Xx, 6Yx, 6Zx, 72x, 73x, 74x, 75x, 76x, 77x, 78x, 79x, 7Ax, 7Bx, 7Cx, 7Dx, 7Ex, 7Fx, 7Px, 7Qx, 7Sx, 7Tx, 7Ux, 7Zx, 82x, 83x, 84x, 85x, 86x, 87x, 88x • 2875-CTO, 23x, 24x, 25x, 26x, 27x, 28x, 29x, 2Ax, 2Bx, 2Cx, 2Dx, 2Ex, 2Fx, 2Gx, 2Hx, 2Jx, 2Kx, 2Lx, 2Mx, 2Nx, 2Px, 2Qx, 2Rx, 2Sx, 2Tx, 2Wx, 2Xx, 2Yx, 2Zx, 35x, 36x, 3Mx, 3Nx, 3Wx, 3Xx, 3Zx, 42x, 43x, 45x, 46x, 4Cx, 4Jx, 4Kx, 4Tx, 4Ux, 4Vx, 4Wx, 4Xx, 58x, 59x, 5Ax, 5Bx, 5Cx, 5Ex, 5Fx, 5Gx, 5Hx, 5Jx • 2931-CTO, 22x, 23x, 24x, 25x, 26x, 27x, 28x, 29x, 2Ax, 2Bx, • 5072-CTO • 0530-CTO, 22x, 32x, 53x, 54x, 55x, 56x, 57x, 59x, 5Ax, 5Bx, 5Cx, 5Dx, 5Ex, 5Fx, 5Jx, 5Kx, 5Lx, 5Mx, 5Nx, 5Px, 5Qx, 5Rx, 5Sx, 5Tx, 5Ux, 5Vx, 5Wx, 5Xx, 5Zx, 62x, 63x, 64x, 65x, 66x, 67x, 68x, 69x, 6Ax, 6Bx, 6Cx, 6Dx, 6Ex, 6Fx, 6Gx, 6Hx, 6Jx, 6Kx, 6Nx • 0553-CTO, 22x, 24x, 25x, 33x, 35x, 36x, 42x, 43x, 44x, 52x, 53x, 54x, 55x, 56x, 57x, 58x, 59x, 5Ax, 5Bx, 5Cx, 5Dx, 5Ex, 5Fx, 5Gx, 5Hx, 5Jx, 5Kx, 5Lx, 5Mx, 5Nx, 5Px, 5Qx, 5Rx, 5Tx, 5Ux, 5Vx, 5Wx, 5Xx, 5Yx, 5Zx, 62x, 63x, 64x, 65x, 66x, 67x, 68x, 69x, 6Bx, 6Cx, 6Dx, 6Fx, 6Gx, 6Hx, 6Jx, 6Kx, 6Lx, 6Mx, 6Nx, 6Px, 6Qx, 6Rx, 6Sx, 6Tx, 6Ux, 6Vx, 6Wx, 6Xx, 6Yx, 6Zx, 72x, 73x, 74x, 75x, 76x, 77x, 78x, 79x, 7Ax, 7Bx, 7Cx, 7Dx, 7Ex, 7Fx, 7Gx, 7Hx, 7Jx, 7Kx, 7Lx, 7Mx, 7Nx, 7Px, 7Qx, 7Rx, 7Sx, 7Tx, 7Ux, 7Vx, 7Wx, 7Xx, 7Yx, 7Zx, 82x, 83x, 84x, 85x, 86x, 87x, 88x, 89x, 8Ax, 8Bx, 8Cx, 8Dx, 8Ex • 0585-CTO, 42x, 43x, 44x, 52x, 53x, 54x, 55x, 56x, 5Ax, 5Bx, 5Dx, 5Fx, 5Hx, 5Kx, 5Mx, 5Px, 5Rx, 5Tx, 5Vx, 5Yx, 64x, 65x, 66x, 67x, 68x, 69x, 6Ax, 6Bx, 6Cx, 6Dx, 6Ex, 6Fx, 6Gx, 6Hx, 6Jx, 6Kx, 6Lx, 6Mx, 6Nx, 6Px, 6Qx, 6Rx, 6Sx, 6Tx, 6Ux, 6Xx, 6Yx, 6Zx, 74x, 75x, 76x, 77x • 0591-CTO, 52x, 53x • 4403-CTO, 32x, 33x, 34x, 35x, 36x, 37x, 38x, 39x, 3Ax, 3Bx, 3Cx, 3Dx, 3Ex, 3Fx, 3Gx, 3Hx, 3Jx, 3Kx, 3Lx, 3Mx, 3Nx, 3Px, 3Qx, 3Rx, 3Sx, 3Tx, 3Ux, 3Vx, 3Wx, 3Xx, 3Yx, 3Zx, 42x, 43x, 44x, 46x, 47x, 48x, 49x, 4Ax, 4Bx, 4Cx, 4Dx, 4Ex, 4Fx, 4Gx, 4Hx, 4Jx, 4Kx, 4Lx, 4Mx, 4Nx, 4Px, 4Rx, 4Sx, 4Tx, 4Ux, 4Vx, 4Wx, 4Xx, 4Yx, 4Zx, 52x, 53x, 54x, 55x, 56x, 57x, 58x, 59x, 5Ax, 5Bx, 5Cx, 5Dx, 5Ex, 5Fx, 5Gx, 5Hx, 5Jx, 5Kx, 5Lx, 5Mx, 5Nx, 5Px, 5Qx, 5Rx, 5Sx, 5Tx, 5Ux, 5Vx, 5Wx, 5Xx, 5Yx, 5Zx, 62x, 63x, 64x, 65x, 66x, 67x, 68x, 69x, 6Ax, 6Bx, 6Cx, 6Dx, 6Ex, 6Fx, 6Gx, 6Hx, 6Jx, 6Kx, 6Mx, 6Nx, 6Px, 6Qx, 6Rx, 6Sx, 6Tx, 6Ux, 6Vx, 6Wx, 6Xx, 6Yx, 6Zx, 72x, 73x, 74x, 77x (to be continued)	60Y3199	N

Table 40. Parts list—Overall (continued)

No.	FRU (Overall)	FRU no.	CRU ID
23	(continued) *Bluetooth* daughter card (BDC-2.1) • 4404-CTO, 32x, 33x, 34x, 35x, 36x, 37x, 38x, 39x, 3Ax, 3Bx, 3Cx, 3Dx, 3Ex, 3Fx, 3Gx, 3Hx, 3Jx, 3Kx, 3Lx, 3Mx, 3Nx, 3Px, 3Qx, 3Rx, 3Sx, 3Tx, 3Ux, 3Vx, 3Wx, 3Xx, 3Yx, 3Zx, 42x, 43x, 44x, 45x, 46x, 47x, 48x, 49x, 4Ax, 4Bx, 4Cx, 4Dx, 4Ex, 4Fx, 4Gx, 4Hx, 4Jx, 4Kx, 4Lx, 4Mx, 4Nx, 4Px, 4Qx, 4Rx, 4Sx, 4Tx, 4Ux, 4Vx, 4Wx, 4Xx, 4Yx, 4Zx • 2550-CTO, 42x, 43x, 44x, 52x, 53x, 54x, 55x, 5Ax, 5Bx, 5Dx, 5Fx, 5Hx, 5Kx, 5Mx, 5Px, 5Rx, 5Tx, 5Vx, 5Xx, 5Yx, 5Zx, 62x, 63x, 64x, 65x, 66x, 67x, 68x, 69x, 6Ax, 6Nx, 6Sx, 6Tx, 6Ux • 2597-CTO, 22x, 32x, 52x, 53x, 54x, 55x, 56x, 58x, 59x, 5Ax, 5Bx, 5Cx, 5Dx, 5Ex, 5Fx, 5Gx, 5Hx, 5Jx, 5Kx, 5Lx, 5Mx, 5Nx, 5Px, 5Qx, 5Rx, 5Sx, 5Tx, 5Vx, 5Wx, 5Xx, 5Yx, 5Zx, 62x, 63x, 64x, 65x, 66x, 67x, 68x, 69x, 6Ax, 6Bx, 6Cx, 6Dx, 6Ex, 6Fx, 6Gx, 6Hx, 6Jx, 6Kx, 6Lx, 6Mx, 6Nx, 6Px, 6Qx • 2598-CTO, 22x, 24x, 25x, 33x, 35x, 42x, 43x, 44x, 52x, 53x, 54x, 55x, 56x, 57x, 58x, 59x, 5Ax, 5Bx, 5Cx, 5Dx, 5Ex, 5Fx, 5Gx, 5Hx, 5Jx, 5Kx, 5Lx, 5Mx, 5Nx, 5Px, 5Qx, 5Rx, 5Sx, 5Tx, 5Vx, 5Wx, 5Xx, 5Yx, 5Zx, 62x, 63x, 64x, 65x, 66x, 67x, 68x, 69x, 6Ax, 6Bx, 6Cx, 6Dx, 6Ex, 6Fx, 6Gx, 6Jx, 6Kx, 6Lx, 6Nx, 6Px, 6Qx, 6Rx, 6Sx, 6Tx, 6Ux, 6Vx, 6Wx, 6Xx, 6Yx, 6Zx, 72x, 73x, 74x, 75x, 76x, 77x, 78x, 79x, 7Ax, 7Bx, 7Cx, 7Dx, 7Ex, 7Fx, 7Gx, 7Hx, 7Jx, 7Kx, 7Qx, 7Rx, 7Sx, 7Tx, 7Ux, 7Vx, 7Wx, 7Xx, 7Yx, 7Zx, 82x, 83x, 84x, 85x • 2599-CTO, 52x, 53x • 4444-CTO, 32x, 33x, 34x, 35x, 36x, 37x, 38x, 39x, 3Ax, 3Bx, 3Cx, 3Dx, 3Ex, 3Fx, 3Gx, 3Hx, 3Jx, 3Kx, 3Lx, 3Mx, 3Nx, 3Px, 3Qx, 3Rx, 3Sx, 3Tx, 3Ux, 3Vx, 3Wx, 3Yx, 3Zx, 42x, 43x, 44x, 45x, 46x, 47x, 48x, 49x, 4Ax, 4Bx, 4Cx, 4Dx, 4Ex, 4Fx, 4Gx, 4Hx, 4Jx, 4Kx, 4Lx, 4Mx, 4Nx, 4Px, 4Qx, 4Vx, 4Wx, 4Xx, 4Yx, 4Zx, 52x, 53x, 54x, 55x, 56x, 57x, 58x, 59x, 5Ax • 4447-CTO, 32x, 33x, 34x, 35x, 36x, 37x, 38x, 39x, 3Ax, 3Bx, 3Cx, 3Dx, 3Ex, 3Fx, 3Gx, 3Hx, 7Lx, 7Mx, 7Nx, 7Px	60Y3199	N

Table 40. Parts list—Overall (continued)

No.	FRU (Overall)	FRU no.	CRU ID
23	*Bluetooth* daughter card (BDC-2.1) • 0616-CTO, 22x, 25x, 26x, 27x, 28x, 29x, 2Cx, 2Dx • 2842-CTO, 25x, 26x, 27x, 28x, 29x, 2Ax, 2Bx, 2Cx, 2Dx, 2Ex, 33x, 34x, 35x, 36x, 37x, 39x, 3Bx, 3Dx, 3Gx, 3Hx, 3Px, 3Qx, 3Rx, 3Sx, 3Tx, 3Ux, 3Vx, 42x, 43x, 45x, 46x, 47x, 48x, 49x, 4Ax, 4Bx, 4Cx, 4Dx, 4Ex, 4Fx, 4Gx, 4Hx, 4Jx, 4Kx, 4Lx, 4Mx, 4Nx, 4Px, 4Qx, 4Rx, 4Sx, 4Tx, 5Ex, 5Fx, 5Jx, 5Kx, 5Lx, 5Mx, 5Nx, 5Px, 5Qx, 5Rx, 5Sx, 5Tx, 5Ux, 5Vx, 5Wx, 5Xx, 5Yx, 5Zx, 62x, 63x, 64x, 65x, 7Bx, 7Cx, 7Dx, 7Ex, 7Fx, 7Gx, 7Hx, 7Jx, 7Qx, 7Rx, 7Sx, 7Tx, 7Ux, 7Vx, 7Wx, 7Xx, 7Yx, 7Zx, 82x, 83x, 84x, 85x, 86x, 8Rx, 9Ax, 9Bx, 9Cx, 9Dx, 9Ex, 9Fx, 9Gx, 9Hx, A2x, A3x, A4x, A5x, A6x, A7x, A8x, A9x, AGx, AHx, AJx, AKx, AMx, ANx, APx, AQx, ARx, ASx, ATx, AUx, AVx, AWx, AXx, AYx, AZx, B2x, B3x, B4x, B5x, B6x, B7x, B8x, B9x, BAx, BBx, BCx, BDx, BEx, BFx, BGx, BHx, BJx, BKx, BMx, BNx, BPx, BQx, BRx, BSx, BTx, BUx, BVx, BWx, BXx, BYx, BZx, C2x, C3x, C4x, C5x, C6x, C7x, C8x, C9x, CAx, CBx, CCx, CDx, CEx, CFx, CGx, CHx, CJx, CKx, CLx, CMx, CNx, CPx, CQx, CRx, CSx, CUx, CVx, CWx, CXx, CYx, CZx, D2x, D3x, D4x, D5x, D6x, D7x, D8x, D9x, DAx, DBx, DCx, DDx, DEx, DFx, DGx, DHx, DJx, DKx, DLx, DMx, DNx, DPx, DQx, DRx, DSx, DTx, DUx, DVx, DWx, DXx, DYx, DZx, E2x, E3x, E4x, E5x, E6x, E7x, E8x, E9x, EAx, EFx, EGx, EHx, EJx, EKx, ELx, ERx, ESx, ETx, EUx, EVx, EWx, EXx, EYx, EZx, F2x, F3x, F4x, F5x, F6x, F9x, FCx, FDx, FEx, FFx, FGx, FHx, FJx, FKx, FLx, FMx, FNx, FPx, FQx, FSx, FTx, FUx, FVx, FWx, FXx, FYx, FZx, G2x, G3x, G4x, G5x, G6x, G7x, G8x, G9x, GBx, GCx, GDx, GEx, GFx, GGx, GHx, GJx, GKx, GLx, GMx, GNx, GPx, GQx, GRx, GSx, GTx, GUx, GVx, GWx, GXx, GYx, GZx, H2x, H3x, H4x, H5x, H6x, H7x, H8x, H9x, HAx, HBx, HCx, HDx, HFx, HGx, HHx, HJx, HKx, HLx, HMx, HNx, HPx, HQx, HRx, HWx, HXx, HYx, HZx, J2x, J3x, J4x, JDx, JEx, JFx, JGx, JHx, JJx, JKx, JLx, JNx, JPx, JQx, JSx, JTx, JUx, JVx, JWx, JXx, JYx, JZx, K2x, KBx, KCx, KLx, KMx, KNx, KPx, KQx, KRx, KSx, KTx, KUx, KXx, KYx, KZx • 2847-CTO, 22x, 23x, 24x, 25x, 26x, 27x, 28x, 29x, 2Ax, 2Bx, 2Cx, 2Dx, 2Ex, 2Fx, 2Gx, 2Hx, 2Lx, 2Px, 2Qx, 2Wx, 2Xx, 2Yx, 2Zx, 33x, 34x, 35x, 36x, 37x, 38x, 3Dx, 3Ex, 3Kx, 3Lx, 3Mx, 3Nx, 3Px, 3Qx, 42x, 43x, 44x, 45x, 46x, 47x, 48x, 49x, 4Ex, 4Fx, 4Gx, 4Jx, 4Nx, 4Px, 4Qx, 4Rx, 4Sx, 4Tx, 4Ux, 4Vx, 4Wx, 54x, 55x, 56x, 57x, 58x, 59x, 5Ax, 5Bx, 5Cx, 5Dx, 5Ex, 5Fx, 5Gx, 68x, 69x, 6Ax, 6Bx, 6Cx, 6Dx, 6Ex, 6Fx, 6Jx, 6Kx, 6Lx, 6Mx, 6Nx, 6Px, 6Qx, 6Rx, 6Sx, 6Tx, 6Ux, 6Vx, 6Wx, 6Xx, 6Yx, 6Zx, 73x, 74x, 75x, 76x, 77x, 78x, 79x, 7Jx, 7Kx, 7Lx, 7Mx, 7Nx, 7Px, 7Qx, 7Rx, 7Sx, 7Ux, 7Wx, 7Xx, 7Yx, 7Zx, 82x, 83x, 84x, 85x, 86x, 87x, 88x, 89x, 8Ax, 8Bx, 8Cx, 8Dx, 8Ex, 8Fx, 8Gx, 8Hx, 8Jx, 8Kx, 8Lx, 8Mx, 8Nx, 8Px, 8Qx, 8Rx, 8Sx, 8Tx, 8Ux, 8Vx, 8Wx, 8Xx, 8Yx, 8Zx, 92x, 93x, 94x, 95x, 96x, 97x, 98x, 99x, 9Ax, 9Bx, 9Cx, 9Dx, 9Ex, 9Fx, 9Gx, 9Hx, 9Jx, 9Kx, 9Lx, 9Nx, 9Px, 9Qx, 9Rx, 9Sx, 9Tx, 9Vx, 9Yx, A2x, A3x, A4x, A5x, A6x, A7x, A8x, A9x, AAx, ABx, ACx, ADx, AEx, AFx, AGx, AHx, AJx, AKx, ALx, AMx, ANx, APx, AQx, ARx, ASx, ATx, AUx, AVx, AWx, AXx, AYx, B2x, B3x, B5x, B6x, B7x, B8x, B9x, BAx, BBx, BCx, BDx, BEx, BFx, BGx, BHx, BJx, BKx, BMx, BNx, BPx, BQx, BRx, BSx, BTx, BUx, BVx, BWx, BXx, BYx, BZx, C2x, C8x, C9x, CGx, CHx, CJx, CKx, CLx, CMx, CNx, CPx, CQx, CRx, CSx, CUx, CVx, CWx, CXx, CYx, D3x, D5x, D6x, D7x, D8x, D9x, DAx, DBx, DCx, DEx, DFx, DGx, DHx, Q2x, Q3x, Q4x, Q5x, Q6x, Q7x, Q8x, Q9x, QAx, QBx, QCx, QDx, QEx, QFx, QJx, RMx, RNx, RPx, RQx, RRx, RSx, RTx, RUx • 2873-CTO, 22x, 32x, 33x (to be continued)	60Y3213	N

Table 40. Parts list—Overall (continued)

No.	FRU (Overall)	FRU no.	CRU ID
23	(continued) *Bluetooth* daughter card (BDC-2.1) • 2874-CTO, 34x, 35x, 36x, 37x, 39x, 3Bx, 3Ex, 3Gx, 3Kx, 3Lx, 3Mx, 3Nx, 46x, 47x, 48x, 49x, 4Ax, 4Bx, 4Dx, 4Fx, 4Gx, 4Hx, 4Jx, 4Kx, 4Lx, 5Jx, 5Kx, 5Lx, 5Mx, 5Nx, 5Px, 5Qx, 5Rx, 62x, 63x, 64x, 65x, 66x, 67x, 68x, 69x, 6Ax, 6Bx, 6Cx, 6Dx, 6Ex, 6Fx, 6Gx, 6Hx, 6Jx, 6Kx, 6Lx, 6Mx, 6Nx, 6Px, 6Qx, 6Rx, 6Sx, 6Tx, 6Ux, 6Vx, 6Wx, 6Xx, 6Yx, 6Zx, 72x, 73x, 74x, 75x, 76x, 77x, 78x, 79x, 7Ax, 7Bx, 7Cx, 7Dx, 7Ex, 7Fx, 7Px, 7Qx, 7Sx, 7Tx, 7Ux, 7Zx, 82x, 83x, 84x, 85x, 86x, 87x, 88x • 2875-CTO, 23x, 24x, 25x, 26x, 27x, 28x, 29x, 2Ax, 2Bx, 2Cx, 2Dx, 2Ex, 2Fx, 2Gx, 2Hx, 2Jx, 2Kx, 2Lx, 2Mx, 2Nx, 2Px, 2Qx, 2Rx, 2Sx, 2Tx, 2Wx, 2Xx, 2Yx, 2Zx, 35x, 36x, 3Mx, 3Nx, 3Wx, 3Xx, 3Zx, 42x, 43x, 45x, 46x, 4Cx, 4Jx, 4Kx, 4Tx, 4Ux, 4Vx, 4Wx, 4Xx, 58x, 59x, 5Ax, 5Bx, 5Cx, 5Ex, 5Fx, 5Gx, 5Hx, 5Jx • 2931-CTO, 22x, 23x, 24x, 25x, 26x, 27x, 28x, 29x, 2Ax, 2Bx, • 5072-CTO • 0530-CTO, 22x, 32x, 53x, 54x, 55x, 56x, 57x, 59x, 5Ax, 5Bx, 5Cx, 5Dx, 5Ex, 5Fx, 5Jx, 5Kx, 5Lx, 5Mx, 5Nx, 5Px, 5Qx, 5Rx, 5Sx, 5Tx, 5Ux, 5Vx, 5Wx, 5Xx, 5Zx, 62x, 63x, 64x, 65x, 66x, 67x, 68x, 69x, 6Ax, 6Bx, 6Cx, 6Dx, 6Ex, 6Fx, 6Gx, 6Hx, 6Jx, 6Kx, 6Nx • 0553-CTO, 22x, 24x, 25x, 33x, 35x, 36x, 42x, 43x, 44x, 52x, 53x, 54x, 55x, 56x, 57x, 58x, 59x, 5Ax, 5Bx, 5Cx, 5Dx, 5Ex, 5Fx, 5Gx, 5Hx, 5Jx, 5Kx, 5Lx, 5Mx, 5Nx, 5Px, 5Qx, 5Rx, 5Tx, 5Ux, 5Vx, 5Wx, 5Xx, 5Yx, 5Zx, 62x, 63x, 64x, 65x, 66x, 67x, 68x, 69x, 6Bx, 6Cx, 6Dx, 6Fx, 6Gx, 6Hx, 6Jx, 6Kx, 6Lx, 6Mx, 6Nx, 6Px, 6Qx, 6Rx, 6Sx, 6Tx, 6Ux, 6Vx, 6Wx, 6Xx, 6Yx, 6Zx, 72x, 73x, 74x, 75x, 76x, 77x, 78x, 79x, 7Ax, 7Bx, 7Cx, 7Dx, 7Ex, 7Fx, 7Gx, 7Hx, 7Jx, 7Kx, 7Lx, 7Mx, 7Nx, 7Px, 7Qx, 7Rx, 7Sx, 7Tx, 7Ux, 7Vx, 7Wx, 7Xx, 7Yx, 7Zx, 82x, 83x, 84x, 85x, 86x, 87x, 88x, 89x, 8Ax, 8Bx, 8Cx, 8Dx, 8Ex • 0585-CTO, 42x, 43x, 44x, 52x, 53x, 54x, 55x, 56x, 5Ax, 5Bx, 5Dx, 5Fx, 5Hx, 5Kx, 5Mx, 5Px, 5Rx, 5Tx, 5Vx, 5Yx, 64x, 65x, 66x, 67x, 68x, 69x, 6Ax, 6Bx, 6Cx, 6Dx, 6Ex, 6Fx, 6Gx, 6Hx, 6Jx, 6Kx, 6Lx, 6Mx, 6Nx, 6Px, 6Qx, 6Rx, 6Sx, 6Tx, 6Ux, 6Xx, 6Yx, 6Zx, 74x, 75x, 76x, 77x • 0591-CTO, 52x, 53x • 4403-CTO, 32x, 33x, 34x, 35x, 36x, 37x, 38x, 39x, 3Ax, 3Bx, 3Cx, 3Dx, 3Ex, 3Fx, 3Gx, 3Hx, 3Jx, 3Kx, 3Lx, 3Mx, 3Nx, 3Px, 3Qx, 3Rx, 3Sx, 3Tx, 3Ux, 3Vx, 3Wx, 3Xx, 3Yx, 3Zx, 42x, 43x, 44x, 46x, 47x, 48x, 49x, 4Ax, 4Bx, 4Cx, 4Dx, 4Ex, 4Fx, 4Gx, 4Hx, 4Jx, 4Kx, 4Lx, 4Mx, 4Nx, 4Px, 4Rx, 4Sx, 4Tx, 4Ux, 4Vx, 4Wx, 4Xx, 4Yx, 4Zx, 52x, 53x, 54x, 55x, 56x, 57x, 58x, 59x, 5Ax, 5Bx, 5Cx, 5Dx, 5Ex, 5Fx, 5Gx, 5Hx, 5Jx, 5Kx, 5Lx, 5Mx, 5Nx, 5Px, 5Qx, 5Rx, 5Sx, 5Tx, 5Ux, 5Vx, 5Wx, 5Xx, 5Yx, 5Zx, 62x, 63x, 64x, 65x, 66x, 67x, 68x, 69x, 6Ax, 6Bx, 6Cx, 6Dx, 6Ex, 6Fx, 6Gx, 6Hx, 6Jx, 6Kx, 6Mx, 6Nx, 6Px, 6Qx, 6Rx, 6Sx, 6Tx, 6Ux, 6Vx, 6Wx, 6Xx, 6Yx, 6Zx, 72x, 73x, 74x, 77x (to be continued)	60Y3213	N

Table 40. Parts list—Overall (continued)

No.	FRU (Overall)	FRU no.	CRU ID
23	(continued) *Bluetooth* daughter card (BDC-2.1) • 4404-CTO, 32x, 33x, 34x, 35x, 36x, 37x, 38x, 39x, 3Ax, 3Bx, 3Cx, 3Dx, 3Ex, 3Fx, 3Gx, 3Hx, 3Jx, 3Kx, 3Lx, 3Mx, 3Nx, 3Px, 3Qx, 3Rx, 3Sx, 3Tx, 3Ux, 3Vx, 3Wx, 3Xx, 3Yx, 3Zx, 42x, 43x, 44x, 45x, 46x, 47x, 48x, 49x, 4Ax, 4Bx, 4Cx, 4Dx, 4Ex, 4Fx, 4Gx, 4Hx, 4Jx, 4Kx, 4Lx, 4Mx, 4Nx, 4Px, 4Qx, 4Rx, 4Sx, 4Tx, 4Ux, 4Vx, 4Wx, 4Xx, 4Yx, 4Zx • 2550-CTO, 42x, 43x, 44x, 52x, 53x, 54x, 55x, 5Ax, 5Bx, 5Dx, 5Fx, 5Hx, 5Kx, 5Mx, 5Px, 5Rx, 5Tx, 5Vx, 5Xx, 5Yx, 5Zx, 62x, 63x, 64x, 65x, 66x, 67x, 68x, 69x, 6Ax, 6Nx, 6Sx, 6Tx, 6Ux • 2597-CTO, 22x, 32x, 52x, 53x, 54x, 55x, 56x, 58x, 59x, 5Ax, 5Bx, 5Cx, 5Dx, 5Ex, 5Fx, 5Gx, 5Hx, 5Jx, 5Kx, 5Lx, 5Mx, 5Nx, 5Px, 5Qx, 5Rx, 5Sx, 5Tx, 5Vx, 5Wx, 5Xx, 5Yx, 5Zx, 62x, 63x, 64x, 65x, 66x, 67x, 68x, 69x, 6Ax, 6Bx, 6Cx, 6Dx, 6Ex, 6Fx, 6Gx, 6Hx, 6Jx, 6Kx, 6Lx, 6Mx, 6Nx, 6Px, 6Qx • 2598-CTO, 22x, 24x, 25x, 33x, 35x, 42x, 43x, 44x, 52x, 53x, 54x, 55x, 56x, 57x, 58x, 59x, 5Ax, 5Bx, 5Cx, 5Dx, 5Ex, 5Fx, 5Gx, 5Hx, 5Jx, 5Kx, 5Lx, 5Mx, 5Nx, 5Px, 5Qx, 5Rx, 5Sx, 5Tx, 5Vx, 5Wx, 5Xx, 5Yx, 5Zx, 62x, 63x, 64x, 65x, 66x, 67x, 68x, 69x, 6Ax, 6Bx, 6Cx, 6Dx, 6Ex, 6Fx, 6Gx, 6Jx, 6Kx, 6Lx, 6Nx, 6Px, 6Qx, 6Rx, 6Sx, 6Tx, 6Ux, 6Vx, 6Wx, 6Xx, 6Yx, 6Zx, 72x, 73x, 74x, 75x, 76x, 77x, 78x, 79x, 7Ax, 7Bx, 7Cx, 7Dx, 7Ex, 7Fx, 7Gx, 7Hx, 7Jx, 7Kx, 7Qx, 7Rx, 7Sx, 7Tx, 7Ux, 7Vx, 7Wx, 7Xx, 7Yx, 7Zx, 82x, 83x, 84x, 85x • 2599-CTO, 52x, 53x • 4444-CTO, 32x, 33x, 34x, 35x, 36x, 37x, 38x, 39x, 3Ax, 3Bx, 3Cx, 3Dx, 3Ex, 3Fx, 3Gx, 3Hx, 3Jx, 3Kx, 3Lx, 3Mx, 3Nx, 3Px, 3Qx, 3Rx, 3Sx, 3Tx, 3Ux, 3Vx, 3Wx, 3Yx, 3Zx, 42x, 43x, 44x, 45x, 46x, 47x, 48x, 49x, 4Ax, 4Bx, 4Cx, 4Dx, 4Ex, 4Fx, 4Gx, 4Hx, 4Jx, 4Kx, 4Lx, 4Mx, 4Nx, 4Px, 4Qx, 4Vx, 4Wx, 4Xx, 4Yx, 4Zx, 52x, 53x, 54x, 55x, 56x, 57x, 58x, 59x, 5Ax • 4447-CTO, 32x, 33x, 34x, 35x, 36x, 37x, 38x, 39x, 3Ax, 3Bx, 3Cx, 3Dx, 3Ex, 3Fx, 3Gx, 3Hx, 7Lx, 7Mx, 7Nx, 7Px	60Y3213	N
24	System board assembly, GL40 (A1/FastEthernet) Integrated 14W • 0616-CTO, 2Dx • 2842-CTO, K5x, K6x, K7x, K8x, K9x, KAx, KBx, KCx, KNx, KPx, KQx, KWx, L2x, L3x, L6x • 2874-all • 2931-CTO	63Y2092	N
24	System board assembly, GM45 (B3/FastEthernet) Integrated 14W • 2842-CTO, BNx, BPx, BQx, GQx, GRx, GSx, GTx, GVx, HBx, HRx, HUx, HVx • 2931-CTO	63Y2094	N

Table 40. Parts list—Overall (continued)

No.	FRU (Overall)	FRU no.	CRU ID
24	System board assembly, GM45 (B3/GigabitEthernet) Integrated 14W • 0616-CTO, 22x, 25x, 26x, 27x, 28x, 29x, 2Cx • 2842-CTO, 22x, 23x, 24x, 29x, 2Ex, 33x, 34x, 35x, 36x, 37x, 39x, 3Bx, 3Fx, 3Gx, 3Hx, 3Px, 3Qx, 3Rx, 3Sx, 3Tx, 3Ux, 3Vx, 42x, 43x, 44x, 45x, 46x, 48x, 49x, 4Ax, 4Bx, 4Cx, 4Dx, 4Ex, 4Fx, 4Gx, 4Hx, 4Jx, 4Kx, 4Lx, 4Ux, 4Vx, 4Wx, 4Xx, 4Yx, 4Zx, 52x, 5Ex, 5Fx, 5Gx, 5Hx, 5Jx, 5Kx, 5Nx, 5Ux, 5Vx, 5Wx, 5Xx, 5Yx, 5Zx, 62x, 63x, 66x, 67x, 68x, 69x, 6Ax, 6Bx, 6Cx, 6Dx, 6Ex, 6Fx, 6Gx, 6Hx, 6Jx, 6Kx, 6Lx, 6Mx, 6Nx, 7Bx, 7Cx, 7Dx, 7Ex, 7Fx, 7Gx, 7Hx, 7Px, 7Qx, 7Rx, 7Sx, 7Tx, 7Ux, 7Vx, 7Wx, 7Xx, 7Yx, 7Zx, 82x, 83x, 84x, 85x, 86x, 87x, 8Ex, 8Rx, 8Sx, 8Tx, 8Ux, 8Vx, 8Wx, 8Xx, 8Yx, 8Zx, 92x, 93x, 94x, 95x, 96x, 97x, 98x, 99x, 9Ax, 9Bx, 9Cx, 9Dx, 9Ex, 9Fx, 9Gx, 9Hx, AAx, ABx, ACx, AGx, AHx, AJx, AKx, ALx, AMx, ANx, APx, AQx, ARx, ASx, ATx, AUx, AVx, AWx, AXx, AYx, AZx, B2x, B3x, B7x, B8x, BCx, BDx, BEx, BFx, BGx, BHx, BJx, BRx, BSx, BTx, BVx, BWx, BXx, C3x, C4x, C7x, C8x, C9x, CAx, CBx, CCx, CDx, CEx, CFx, CGx, CHx, CMx, CNx, CPx, CQx, CRx, CSx, CXx, CYx, CZx, D9x, DAx, DBx, DEx, DGx, DHx, DJx, DKx, DMx, DNx, DPx, DQx, DRx, DSx, DTx, DUx, DVx, DWx, DXx, DYx, E2x, E3x, E4x, E5x, E6x, E7x, E8x, E9x, EAx, EBx, ECx, EDx, EEx, EFx, EGx, EHx, EJx, EKx, ELx, F4x, F7x, F8x, F9x, FAx, FBx, FCx, FDx, FEx, FPx, FQx, FTx, FVx, FWx, FXx, FYx, FZx, G3x, G5x, G8x, GDx, GFx, GGx, GHx, GJx, GKx, GMx, GPx, GWx, GXx, GYx, GZx, H6x, H7x, H8x, H9x, HAx, HCx, HDx, HEx, HFx, HJx, HKx, HLx, HMx, HNx, HXx, HYx, HZx, J2x, J3x, J4x, JDx, JEx, JHx, JKx, JLx, JMx, JNx, JPx, JQx, JRx, JSx, JTx, JUx, JVx, JWx, JXx, JYx, JZx, K2x, K3x, K4x, KDx, KEx, KFx, KGx, KHx, KJx, KKx, KLx, KMx, KRx, KSx, KTx, KUx, KVx, KXx, KYx, KZx, L4x, L5x, L7x • 2931-CTO, 23x, 24x, 25x, 28x, 29x, 2Ax, 2Bx	63Y2096	N
24	System board assembly, PM45 (B3/GigabitEthernet) AMD 256 MB 14W • 0616-CTO • 2842-CTO, 25x, 26x, 27x, 28x, 2Ax, 2Bx, 2Cx, 2Dx, 3Dx, 47x, 4Mx, 4Nx, 4Px, 4Qx, 4Rx, 4Sx, 4Tx, 53x, 54x, 55x, 56x, 57x, 58x, 59x, 5Ax, 5Bx, 5Cx, 5Dx, 5Lx, 5Mx, 5Px, 5Qx, 5Rx, 5Sx, 5Tx, 64x, 65x, 6Px, 6Qx, 6Rx, 6Sx, 6Tx, 6Ux, 6Vx, 6Wx, 6Xx, 6Yx, 6Zx, 72x, 73x, 74x, 75x, 76x, 77x, 78x, 7Jx, 88x, 89x, 8Ax, 8Bx, 8Cx, 8Dx, 8Fx, 8Gx, 8Hx, 8Jx, 8Kx, 8Lx, 8Mx, 8Nx, 9Jx, 9Kx, 9Lx, 9Mx, 9Nx, 9Px, 9Qx, 9Rx, 9Sx, 9Tx, 9Ux, 9Vx, 9Wx, 9Xx, 9Yx, 9Zx, A2x, A3x, A4x, A5x, A6x, A7x, A8x, A9x, ADx, AEx, AFx, B4x, B5x, B6x, B9x, BAx, BBx, BKx, BMx, BUx, BYx, BZx, C2x, C5x, C6x, CJx, CKx, CLx, CUx, CVx, CWx, D2x, D3x, D4x, D5x, D6x, D7x, D8x, DCx, DDx, DFx, DLx, DZx, EMx, ENx, EPx, EQx, ERx, ESx, ETx, EUx, EVx, EWx, EXx, EYx, EZx, F2x, F3x, F5x, F6x, FFx, FGx, FHx, FJx, FKx, FLx, FMx, FNx, FSx, FUx, G2x, G4x, G6x, G7x, G9x, GBx, GCx, GEx, GLx, GNx, GUx, H2x, H3x, H5x, HGx, HHx, HPx, HQx, HSx, HTx, HWx, J5x, J6x, J7x, J8x, J9x, JAx, JBx, JCx, JFx, JGx, JJx • 2931-CTO, 22x, 26x, 27x	42W8268	N
24	System board assembly, PM45 (B3/GigabitEthernet) AMD 512 MB 14W • 0616-CTO • 2842-CTO • 2931-CTO	04W0413	N

Table 40. Parts list—Overall (continued)

No.	FRU (Overall)	FRU no.	CRU ID
24	System board assembly, HM55 integrated 14W Dock, TPM, AUO3, with wireless WAN • 0530-CTO, 52x, 54x, 56x, 62x, 63x, 64x, 65x, 66x, 67x, 6Ex, 6Fx, 6Gx, 6Mx • 0553-CTO, 24x, 35x, 36x, 42x, 43x, 44x, 54x, 55x, 56x, 57x, 58x, 59x, 5Cx, 5Fx, 5Lx, 5Px, 5Qx, 6Hx, 6Jx, 6Mx, 6Nx, 6Rx, 6Sx, 6Tx, 6Wx, 7Rx, 7Sx, 7Tx, 7Yx, 7Zx, 82x, 83x, 84x, 87x, 8Ax, 8Ex, R3x • 0585-CTO, 42x, 43x, 44x, 54x, 55x, 56x, 67x, 68x, 69x, 6Ax, 6Bx, 6Cx, 6Dx, 6Ex, 6Fx, 77x • 0591-CTO, 52x, 53x • 4403-CTO, 32x, 33x, 34x, 37x, 38x, 39x, 4Kx, 4Lx, 4Mx, 53x, 54x, 67x, 68x, 69x, 6Hx, 6Jx, 6Kx, 6Yx, 6Zx, 72x, 73x, 75x, 76x • 4404-CTO, 32x, 33x, 34x, 35x, 3Mx, 3Nx, 3Px, 3Qx, 3Rx, 3Sx, 3Tx, 3Ux, 4Lx	75Y4002	N
24	System board assembly, HM55 integrated 14W Dock, TPM, AUO3, without wireless WAN • 0530-CTO, 22x, 32x, 53x, 55x, 57x, 5Jx, 5Kx, 5Lx, 5Mx, 5Nx, 5Px, 5Qx, 5Rx, 5Sx, 5Tx, 5Ux, 5Zx, 68x, 69x, 6Ax, 6Bx, 6Lx, 6Nx • 0553-CTO, 22x, 33x, 52x, 53x, 5Ax, 5Bx, 5Dx, 5Ex, 5Gx, 5Hx, 5Jx, 5Kx, 5Mx, 5Nx, 5Rx, 5Tx, 5Ux, 5Vx, 5Wx, 5Xx, 5Yx, 5Zx, 62x, 63x, 64x, 65x, 66x, 67x, 68x, 69x, 6Bx, 6Cx, 6Fx, 6Gx, 6Kx, 6Lx, 6Px, 6Qx, 6Ux, 6Vx, 7Mx, 7Nx, 85x, 86x, 89x, 8Dx, R2x • 0585-CTO, 52x, 53x, 57x, 58x, 59x, 5Ax, 5Bx, 5Dx, 5Fx, 5Hx, 5Kx, 5Mx, 5Px, 5Rx, 5Tx, 5Vx, 5Yx, 6Jx, 6Kx, 6Lx, 6Mx, 6Nx, 6Tx, 6Ux • 0591-CTO • 4403-CTO, 35x, 36x, 6Cx, 6Lx, 6Mx, 74x, 77x • 4404-CTO, 36x, 37x, 38x, 39x, 3Ax, 3Bx, 3Cx, 3Dx, 3Ex, 3Fx, 4Px	75Y4004	N
24	System board assembly, HM55 integrated 14W Dock, no-TPM, AUO3, with wireless WAN • 0530-CTO • 0553-CTO • 0585-CTO • 0591-CTO • 4403-CTO, 64x, 65x, 66x • 4404-CTO	75Y4006	N
24	System board assembly, HM55 integrated 14W Dock, no-TPM, AUO3, without wireless WAN • 0530-CTO, 59x, 5Ax, 5Bx, 5Cx, 5Dx, 5Ex, 5Fx, 5Gx, 5Vx, 5Wx, 5Xx • 0553-CTO, 6Dx • 0585-CTO • 0591-CTO • 4403-CTO, 3Ax, 3Bx, 3Cx, 3Dx, 3Ex, 3Fx, 3Gx, 3Hx, 3Jx, 3Kx, 3Lx, 3Mx, 3Nx, 3Px, 3Qx, 3Rx, 3Sx, 3Tx, 3Ux, 3Vx, 3Wx, 3Xx, 3Yx, 3Zx, 42x, 43x, 44x, 45x, 46x, 47x, 48x, 49x, 4Ax, 4Bx, 4Cx, 4Dx, 4Ex, 4Fx, 4Gx, 4Hx, 4Jx, 4Ux, 4Vx, 4Wx, 4Xx, 4Yx, 4Zx, 52x, 59x, 5Ax, 5Bx, 5Cx, 5Dx, 5Ex, 5Fx, 5Gx, 5Hx, 5Jx, 5Kx, 5Lx, 5Mx, 6Dx, 6Nx, 6Px • 4404-CTO, 3Xx, 3Yx, 3Zx, 42x, 43x, 44x, 45x, 46x, 47x, 48x, 4Qx, 4Rx	75Y4008	N
24	System board assembly, HM55 AMD 512MB 14W Dock, TPM, AUO3, with wireless WAN • 0530-CTO • 0553-CTO, 25x, 6Xx, 6Yx, 6Zx, 72x, 73x, 74x, 75x, 76x, 77x, 79x, 7Ax, 7Fx, 7Jx, 7Kx, 7Ux, 88x, 8Bx, 8Cx • 0585-CTO, 64x, 65x, 66x, 6Gx, 6Hx, 6Px, 6Qx, 6Xx, 6Yx, 6Zx, 74x, 75x, 76x • 0591-CTO • 4403-CTO, 58x • 4404-CTO, 3Gx, 3Hx, 3Jx, 3Kx, 3Lx, 3Vx, 3Wx	75Y4088	N

Table 40. Parts list—Overall (continued)

No.	FRU (Overall)	FRU no.	CRU ID
24	System board assembly, HM55 AMD 512MB 14W Dock, TPM, AUO3, without wireless WAN • 0530-CTO, 6Cx, 6Dx • 0553-CTO, 78x, 7Bx, 7Cx, 7Dx, 7Ex, 7Gx, 7Hx, 7Lx, 7Px, 7Qx • 0585-CTO, 6Rx, 6Sx • 0591-CTO • 4403-CTO, 55x, 56x, 57x • 4404-CTO	75Y4090	N
24	System board assembly, HM55 AMD 512MB 14W Dock, no-TPM, AUO3, with wireless WAN • 0530-CTO • 0553-CTO • 0585-CTO • 0591-CTO • 4403-CTO, 6Ax, 6Bx • 4404-CTO	75Y4092	N
24	System board assembly, HM55 AMD 512MB 14W Dock, no-TPM, AUO3, without wireless WAN • 0530-CTO, 6Hx, 6Jx, 6Kx • 0553-CTO, 7Vx, 7Wx, 7Xx • 0585-CTO • 0591-CTO • 4403-CTO, 4Nx, 4Px, 4Rx, 4Sx, 4Tx, 5Nx, 5Px, 5Qx, 5Rx, 5Sx, 5Tx, 5Ux, 5Vx, 5Wx, 5Xx, 5Yx, 5Zx, 62x, 63x, 6Ex, 6Fx, 6Gx, 6Qx, 6Rx, 6Sx, 6Tx, 6Ux, 6Vx, 6Wx, 6Xx • 4404-CTO, 49x, 4Ax, 4Bx, 4Cx, 4Dx, 4Ex, 4Fx, 4Gx, 4Hx, 4Jx, 4Kx, 4Mx, 4Nx, 4Sx, 4Tx, 4Ux, 4Vx, 4Wx, 4Xx, 4Yx, 4Zx	75Y4094	N
24	System board assembly, GL40 (A1/FastEthernet) Integrated 15W • 2847-CTO, D4x, DCx, DDx • 2873-CTO • 2875-all • 5072-CTO	63Y2098	N
24	System board assembly, GM45 (B3/FastEthernet) Integrated 15W • 2847-CTO, 24x, 25x, 26x, 27x, 28x, 29x, 2Ax, 7Wx, 7Xx, 7Yx, AQx, ASx, AUx • 2873-CTO	63Y2100	N
24	System board assembly, GM45 (B3/GigabitEthernet) Integrated 15W • 2847-CTO, 22x, 2Bx, 2Cx, 2Dx, 2Ex, 2Fx, 2Gx, 2Hx, 2Jx, 2Kx, 2Lx, 2Mx, 2Nx, 2Px, 2Qx, 2Rx, 2Sx, 2Tx, 2Ux, 2Vx, 2Wx, 2Xx, 2Yx, 2Zx, 33x, 34x, 37x, 38x, 39x, 3Dx, 3Ex, 3Kx, 3Lx, 3Nx, 3Px, 3Qx, 3Vx, 3Wx, 3Xx, 3Yx, 3Zx, 42x, 43x, 45x, 46x, 48x, 49x, 4Ax, 4Ex, 4Fx, 4Gx, 4Hx, 4Jx, 4Nx, 4Px, 4Qx, 4Rx, 4Sx, 4Tx, 4Ux, 4Vx, 4Xx, 4Yx, 4Zx, 52x, 53x, 54x, 55x, 56x, 57x, 58x, 59x, 5Ex, 5Hx, 5Jx, 5Kx, 5Lx, 5Mx, 5Nx, 5Px, 5Qx, 5Rx, 5Sx, 5Tx, 68x, 69x, 6Ax, 6Bx, 6Cx, 6Dx, 6Ex, 6Fx, 6Gx, 6Hx, 6Lx, 6Mx, 6Rx, 6Ux, 6Vx, 6Wx, 6Yx, 72x, 73x, 74x, 75x, 76x, 77x, 78x, 79x, 7Bx, 7Ex, 7Fx, 7Jx, 7Kx, 7Lx, 7Mx, 7Nx, 7Px, 7Qx, 7Tx, 7Ux, 7Vx, 84x, 85x, 89x, 8Ax, 8Bx, 8Cx, 8Dx, 8Ex, 8Hx, 8Jx, 8Kx, 8Lx, 8Mx, 8Nx, 8Px, 8Qx, 8Rx, 8Sx, 8Tx, 93x, 94x, 95x, 96x, 97x, 98x, 99x, 9Cx, 9Dx, 9Gx, 9Jx, 9Kx, 9Lx, 9Mx, 9Nx, 9Qx, 9Ux, 9Vx, 9Wx, 9Xx, 9Yx, 9Zx, A2x, A5x, A6x, A7x, A9x, ACx, AEx, AFx, AHx, AKx, ALx, AMx, ANx, APx, ARx, ATx, AVx, AWx, AXx, AYx, AZx, B2x, B3x, B4x, BBx, BCx, BDx, BEx, BFx, BGx, BHx, BJx, BKx, BMx, BNx, BPx, BQx, BRx, BSx, BTx, BUx, BVx, BWx, BXx, BYx, C5x, C6x, CGx, CHx, CLx, CMx, CQx, CRx, CSx, CUx, CVx, CWx, CXx, CYx, CZx, D2x, D3x, D5x, D6x, D7x, D8x, D9x, DAx, DBx, DEx, DFx, DGx, DHx, DJx, DKx, DLx, Q3x, Q4x, Q5x, Q6x, Q7x, Q8x, Q9x, QAx, QDx, QEx, QFx, QGx, QHx, QJx, R2x, R3x • 2873-CTO, 22x, 32x • 5072-CTO	63Y2102	N

Table 40. Parts list—Overall (continued)

No.	FRU (Overall)	FRU no.	CRU ID
24	System board assembly, PM45 (B3/GigabitEthernet) AMD 256 MB 15W • 2847-CTO, 23x, 35x, 36x, 3Mx, 44x, 47x, 4Bx, 4Cx, 4Dx, 4Wx, 5Ax, 5Bx, 5Cx, 5Dx, 5Fx, 5Gx, 5Ux, 5Vx, 5Wx, 5Xx, 5Yx, 5Zx, 62x, 63x, 64x, 65x, 66x, 67x, 6Jx, 6Kx, 6Nx, 6Px, 6Qx, 6Sx, 6Tx, 6Xx, 6Zx, 7Ax, 7Cx, 7Dx, 7Rx, 7Sx, 7Zx, 82x, 83x, 86x, 87x, 88x, 8Fx, 8Gx, 8Ux, 8Vx, 8Wx, 8Xx, 8Yx, 8Zx, 92x, 9Ax, 9Bx, 9Ex, 9Fx, 9Hx, 9Px, 9Rx, 9Sx, 9Tx, A3x, A4x, A8x, AAx, ABx, ADx, AGx, AJx, B5x, B6x, B7x, B8x, B9x, BAx, BZx, C2x, C3x, C4x, C7x, C8x, C9x, CAx, CBx, CCx, CDx, CEx, CFx, CJx, CKx, CNx, CPx, Q2x, QBx, QCx, R4x, R5x, R6x, R7x, R8x, R9x, RAx, RBx, RCx, RDx, RFx, RGx, RHx, RJx, RKx, RLx, RMx, RNx, RPx, RQx, RRx, RSx, RTx, RUx, RVx, RWx, RXx • 2873-CTO, 33x • 5072-CTO	42W8274	N
24	System board assembly, HM55 integrated 15W Dock, TPM, AUO3, with wireless WAN • 2550-CTO, 42x, 43x, 44x, 6Nx • 2597-CTO, 53x, 55x, 5Xx, 5Yx, 5Zx, 62x, 63x, 64x, 66x, 67x, 69x, 6Nx, 6Px, 6Qx • 2598-CTO, 24x, 34x, 35x, 42x, 43x, 44x, 52x, 53x, 54x, 55x, 5Ax, 5Bx, 5Cx, 5Ex, 5Gx, 5Jx, 5Lx, 5Nx, 5Qx, 5Sx, 65x, 66x, 6Lx, 6Nx, 6Qx, 6Rx, 7Ex, 7Fx, 7Sx, 7Tx, 7Ux, 7Xx, 83x, 85x, R3x • 2599-CTO, 52x, 53x • 4444-CTO, 32x, 33x, 34x, 36x, 37x, 38x, 3Rx, 3Ux, 4Ex, 4Fx, 4Jx, 4Nx, 4Qx, 4Vx, 4Wx, 4Xx, 53x, 54x, 55x, 5Bx, 5Cx, 5Dx, 5Ex • 4447-CTO, 32x, 33x, 3Ex, 3Hx	75Y4010	N
24	System board assembly, HM55 integrated 15W Dock, TPM, AUO3, without wireless WAN • 2550-CTO, 52x, 53x, 54x, 55x, 57x, 58x, 59x, 5Ax, 5Bx, 5Dx, 5Fx, 5Hx, 5Kx, 5Mx, 5Px, 5Rx, 5Tx, 5Vx, 5Xx, 63x, 64x, 65x, 66x • 2597-CTO, 22x, 32x, 52x, 54x, 56x, 5Gx, 5Hx, 5Jx, 5Kx, 5Lx, 5Mx, 5Nx, 5Px, 5Qx, 5Rx, 5Sx, 5Tx, 5Vx, 5Wx, 65x, 6Bx, 6Cx, 6Dx, 6Ex, 6Fx • 2598-CTO, 22x, 33x, 56x, 57x, 58x, 59x, 5Dx, 5Fx, 5Hx, 5Kx, 5Mx, 5Px, 5Rx, 5Tx, 5Vx, 5Wx, 5Xx, 5Yx, 5Zx, 62x, 63x, 64x, 67x, 68x, 69x, 6Ax, 6Bx, 6Cx, 6Dx, 6Ex, 6Fx, 6Gx, 6Jx, 6Kx, 6Px, 7Gx, 7Hx, 7Vx, 7Wx, 84x, R2x • 2599-CTO • 4444-CTO, 35x, 4Kx, 4Lx, 4Rx, 4Sx, 4Tx, 4Ux, 4Yx, 52x, 59x, 5Ax • 4447-CTO, 34x, 35x, 36x, 37x, 38x, 39x, 3Ax, 3Bx, 3Cx, 3Dx, 7Lx, 7Mx, 7Nx, 7Px	75Y4012	N
24	System board assembly, HM55 integrated 15W Dock, no-TPM, AUO3, with wireless WAN • 2550-CTO • 2597-CTO • 2598-CTO • 2599-CTO • 4444-CTO, 4Bx, 4Cx, 4Dx • 4447-CTO	75Y4014	N
24	System board assembly, HM55 integrated 15W Dock, no-TPM, AUO3, without wireless WAN • 2550-CTO • 2597-CTO, 58x, 59x, 5Ax, 5Bx, 5Cx, 5Dx, 5Ex, 5Fx, 6Jx, 6Kx, 6Lx, 6Mx • 2598-CTO • 2599-CTO • 4444-CTO, 39x, 3Ax, 3Bx, 3Cx, 3Dx, 3Ex, 3Fx, 3Gx, 3Hx, 3Jx, 3Kx, 3Lx, 43x, 44x, 45x, 46x, 47x, 48x • 4447-CTO	75Y4016	N

Table 40. Parts list—Overall (continued)

No.	FRU (Overall)	FRU no.	CRU ID
24	System board assembly, HM55 AMD 512MB 15W Dock, TPM, AUO3, with wireless WAN • 2550-CTO, 5Zx, 62x, 6Sx, 6Tx, 6Ux • 2597-CTO, 68x • 2598-CTO, 25x, 6Sx, 6Tx, 6Ux, 6Vx, 6Wx, 6Xx, 6Yx, 72x, 75x, 77x, 78x, 79x, 7Ax, 7Bx, 7Cx, 7Dx, 7Qx, 7Rx, 7Yx, 7Zx • 2599-CTO • 4444-CTO, 3Mx, 3Nx, 3Px, 3Qx, 3Sx, 3Tx, 4Px, 56x, 57x, 58x • 4447-CTO, 3Fx, 3Gx	75Y4096	N
24	System board assembly, HM55 AMD 512MB 15W Dock, TPM, AUO3, without wireless WAN • 2550-CTO, 5Yx, 67x, 68x, 69x, 6Ax • 2597-CTO, 6Ax, 6Gx, 6Hx • 2598-CTO, 6Zx, 73x, 74x, 76x, 7Jx, 7Kx, 82x • 2599-CTO • 4444-CTO, 49x, 4Ax, 4Mx, 4Zx • 4447-CTO	75Y4098	N
24	System board assembly, HM55 AMD 512MB 15W Dock, no-TPM, AUO3, with wireless WAN • 2550-CTO • 2597-CTO • 2598-CTO • 2599-CTO • 4444-CTO, 4Gx, 4Hx • 4447-CTO	75Y4100	N
24	System board assembly, HM55 AMD 512MB 15W Dock, no-TPM, AUO3, without wireless WAN • 2550-CTO • 2597-CTO • 2598-CTO • 2599-CTO • 4444-CTO, 3Vx, 3Wx, 3Yx, 3Zx, 42x • 4447-CTO	75Y4102	N
25	ExpressCard slot blank bezel for SL410, L410, SL510, and L510	60Y4341	*
25	ExpressCard slot blank bezel for L412 and L512	60Y5023	*

Table 40. Parts list—Overall (continued)

No.	FRU (Overall)	FRU no.	CRU ID
26	Palm rest assembly without fingerprint reader for SL410 and L410 • 2842-CTO, 22x, 23x, 24x, 29x, 2Ex, 33x, 34x, 36x, 37x, 39x, 3Bx, 3Fx, 3Gx, 3Hx, 3Px, 3Rx, 3Sx, 3Tx, 3Ux, 3Vx, 42x, 43x, 44x, 45x, 46x, 47x, 48x, 49x, 4Ax, 4Bx, 4Cx, 4Dx, 4Ex, 4Fx, 4Gx, 4Hx, 4Jx, 4Kx, 4Lx, 4Mx, 4Nx, 4Ux, 4Vx, 4Wx, 4Xx, 4Zx, 52x, 53x, 54x, 55x, 56x, 59x, 5Ax, 5Bx, 5Cx, 5Dx, 5Ex, 5Fx, 5Gx, 5Hx, 5Lx, 5Mx, 5Nx, 5Px, 5Qx, 5Rx, 5Sx, 5Tx, 5Ux, 5Vx, 5Wx, 5Xx, 5Yx, 5Zx, 62x, 63x, 64x, 65x, 66x, 67x, 68x, 69x, 6Ax, 6Bx, 6Cx, 6Dx, 6Ex, 6Fx, 6Gx, 6Hx, 6Jx, 6Kx, 6Lx, 6Mx, 6Nx, 6Px, 6Qx, 6Rx, 6Sx, 6Tx, 6Ux, 6Vx, 6Wx, 6Xx, 6Yx, 6Zx, 72x, 73x, 74x, 75x, 76x, 77x, 7Ex, 7Px, 7Qx, 7Rx, 7Sx, 7Tx, 7Ux, 7Vx, 7Wx, 7Xx, 85x, 86x, 8Mx, 8Nx, 8Rx, 8Sx, 8Tx, 8Ux, 8Vx, 8Wx, 8Xx, 8Yx, 8Zx, 92x, 93x, 94x, 95x, 96x, 97x, 98x, 99x, 9Ax, 9Bx, 9Cx, 9Dx, 9Ex, 9Fx, 9Gx, 9Hx, 9Jx, 9Kx, 9Lx, 9Mx, 9Nx, 9Px, 9Qx, 9Rx, 9Sx, 9Tx, 9Ux, 9Vx, 9Wx, 9Xx, 9Yx, 9Zx, A2x, A3x, A4x, A5x, A6x, A7x, A8x, A9x, AAx, ABx, ACx, ADx, AEx, AFx, AGx, AHx, AJx, AKx, ALx, AMx, ANx, APx, AQx, ARx, ASx, ATx, AUx, AVx, AWx, AXx, AYx, AZx, B2x, B3x, B4x, B5x, B6x, B7x, B8x, B9x, BAx, BBx, BCx, BDx, BEx, BFx, BRx, BSx, BUx, BVx, BXx, BYx, BZx, C2x, C3x, C4x, C5x, C6x, C7x, C8x, C9x, CAx, CBx, CCx, CDx, CEx, CFx, CMx, CNx, CPx, CQx, CRx, CSx, CUx, CVx, CWx, CXx, CYx, CZx, D2x, D3x, D4x, D5x, D6x, D7x, D8x, D9x, DAx, DBx, DCx, DDx, DEx, DFx, DGx, DHx, DJx, DKx, DNx, DPx, DQx, DRx, DSx, DTx, DUx, DVx, DWx, DXx, DYx, DZx, E5x, EAx, EBx, ECx, EDx, EEx, EFx, EGx, EHx, EJx, EKx, ELx, EMx, ENx, EPx, EQx, ERx, ESx, ETx, EUx, EVx, EWx, EZx, F5x, F6x, F7x, F8x, FAx, FBx, FCx, FDx, FEx, FFx, FGx, FHx, FJx, FKx, FLx, FMx, FNx, FPx, FQx, FSx, FTx, FUx, FVx, FWx, FXx, FYx, FZx, G2x, G3x, G4x, G5x, G6x, G7x, G8x, G9x, GBx, GCx, GDx, GEx, GFx, GKx, GLx, GMx, GNx, GPx, GQx, GRx, GSx, GTx, GUx, GVx, GWx, GXx, GYx, GZx, H2x, H3x, H4x, H5x, H6x, H7x, H8x, H9x, HAx, HDx, HEx, HFx, HGx, HHx, HKx, HLx, HMx, HNx, HPx, HRx, HSx, HTx, HUx, HVx, HWx, J5x, J6x, J7x, J8x, J9x, JAx, JBx, JCx, JDx, JEx, JFx, JGx, JKx, JLx, JMx • 2874-CTO, 22x, 32x, 33x, 34x, 35x, 37x, 39x, 3Bx, 3Ex, 3Gx, 3Lx, 3Mx, 3Nx, 3Px, 3Qx, 3Rx, 3Sx, 46x, 47x, 48x, 49x, 4Ax, 4Bx, 4Cx, 4Dx, 4Gx, 4Hx, 4Jx, 4Kx, 4Lx, 4Mx, 4Nx, 4Px, 4Qx, 52x, 53x, 54x, 55x, 56x, 57x, 58x, 59x, 5Ax, 5Bx, 5Cx, 5Dx, 5Ex, 5Fx, 5Gx, 5Hx, 5Jx, 5Kx, 5Lx, 5Mx, 5Nx, 5Px, 5Qx, 5Rx, 62x, 63x, 64x, 65x, 66x, 67x, 68x, 69x, 6Ax, 6Bx, 6Cx, 6Dx, 6Ex, 6Fx, 6Gx, 6Hx, 6Jx, 6Kx, 6Lx, 6Px, 6Qx, 6Rx, 6Tx, 6Ux, 6Xx, 6Yx, 74x, 75x, 76x, 77x, 78x, 79x, 7Bx, 7Cx, 7Dx, 7Ex, 7Fx, 7Gx, 7Hx, 7Jx, 7Kx, 7Lx, 7Mx, 7Nx, 7Rx, 7Sx, 7Tx, 7Ux, 7Vx, 7Wx, 7Xx, 7Yx, 7Zx, 84x, 85x, 86x, 87x, 88x, 89x, 8Ax, 8Bx, 8Cx, 8Dx, 8Ex, 8Fx, 8Gx, 8Hx, 8Jx, 8Kx, 8Lx, 8Mx, 8Nx • 2931-CTO, 25x	60Y4130	N
26	Palm rest assembly with fingerprint reader for SL410 and L410 • 2842-CTO, 25x, 26x, 27x, 28x, 2Ax, 2Bx, 2Cx, 2Dx, 35x, 3Dx, 3Qx, 4Px, 4Qx, 4Rx, 4Sx, 4Tx, 4Yx, 57x, 58x, 5Jx, 5Kx, 78x, 7Bx, 7Cx, 7Dx, 7Fx, 7Gx, 7Hx, 7Jx, 7Yx, 7Zx, 82x, 83x, 84x, 87x, 88x, 89x, 8Ax, 8Bx, 8Cx, 8Dx, 8Ex, 8Fx, 8Gx, 8Hx, 8Jx, 8Kx, 8Lx, BGx, BHx, BJx, BKx, BMx, BNx, BPx, BQx, BTx, BWx, CGx, CHx, CJx, CKx, CLx, DLx, DMx, E2x, E3x, E4x, E6x, E7x, E8x, E9x, EXx, EYx, F2x, F3x, F4x, F9x, GGx, GHx, GJx, HBx, HCx, HJx, HQx, HXx, HYx, HZx, J2x, J3x, J4x, JHx, JJx, JNx, JPx • 2874-CTO, 36x, 3Kx, 4Fx, 6Mx, 6Nx, 6Sx, 6Vx, 6Wx, 6Zx, 72x, 73x, 7Ax, 7Px, 7Qx, 82x, 83x • 2931-CTO, 22x, 23x, 24x, 26x, 27x	60Y4132	N
26	Palm rest assembly without fingerprint reader for SL410 and L410, texture • 0616-all • 2842-CTO, JQx, JRx, JSx, JTx, JUx, JVx, JWx, JXx, JYx, JZx, K2x, K3x, K4x, K5x, K6x, K7x, K8x, K9x, KAx, KBx, KCx, KDx, KEx, KFx, KGx, KHx, KJx, KKx, KLx, KMx, KNx, KPx, KQx, KRx, KSx, KTx, KUx, KVx, KWx, KXx, KYx, KZx, L2x, L3x, L4x, L5x, L6x, L7x • 2931-CTO, 28x, 29x, 2Ax, 2Bx	04W0369	N

Table 40. Parts list—Overall (continued)

No.	FRU (Overall)	FRU no.	CRU ID
26	Palm rest assembly without fingerprint reader for L412 • 0530-CTO, 22x, 32x, 52x, 53x, 54x, 55x, 56x, 57x, 59x, 5Ax, 5Bx, 5Cx, 5Dx, 5Ex, 5Fx, 5Gx, 5Kx, 5Lx, 5Mx, 5Nx, 5Px, 5Qx, 5Rx, 5Sx, 5Tx, 5Ux, 5Vx, 5Wx, 5Xx, 62x, 63x, 68x, 69x, 6Bx, 6Dx, 6Ex, 6Fx, 6Gx, 6Lx, 6Mx, 6Nx • 0553-CTO, 42x, 43x, 55x, 58x, 5Dx, 5Kx, 5Lx, 5Nx, 5Yx, 5Zx, 62x, 63x, 64x, 65x, 66x, 67x, 68x, 69x, 6Dx, 6Sx, 6Tx, 6Vx, 6Wx, 6Xx, 6Yx, 72x, 74x, 75x, 7Cx, 7Ex, 7Fx, 7Hx, 7Nx, 7Qx, 85x, 86x, 89x, 8Ax, 8Bx, R2x, R3x • 0585-CTO, 42x, 43x, 57x, 58x, 59x, 67x, 6Jx, 6Kx, 6Lx, 6Mx, 6Nx, 6Px, 6Qx, 6Rx, 6Sx, 6Tx, 6Ux, 6Xx, 6Yx, 74x, 75x • 0591-CTO, 52x, 53x • 4403-CTO, 32x, 33x, 35x, 3Wx, 3Xx, 3Yx, 3Zx, 42x, 43x, 44x, 45x, 46x, 47x, 48x, 49x, 4Ax, 4Nx, 4Px, 4Rx, 4Sx, 4Tx, 4Ux, 4Vx, 4Wx, 4Xx, 4Yx, 4Zx, 52x, 55x, 56x, 57x, 58x, 64x, 65x, 66x, 68x, 69x, 6Ax, 6Bx, 6Cx, 6Nx, 6Px, 6Qx, 6Rx, 74x, 75x, 76x, 77x • 4404-CTO, 32x, 33x, 34x, 3Hx, 3Kx, 3Lx, 4Lx, 4Qx, 4Rx, 4Sx, 4Tx	60Y5015	N
26	Palm rest assembly with fingerprint reader for L412 • 0530-CTO, 5Jx, 5Zx, 64x, 65x, 66x, 67x, 6Ax, 6Cx, 6Hx, 6Jx, 6Kx • 0553-CTO, 22x, 24x, 25x, 33x, 35x, 36x, 44x, 52x, 53x, 54x, 56x, 57x, 59x, 5Ax, 5Bx, 5Cx, 5Ex, 5Fx, 5Gx, 5Hx, 5Jx, 5Mx, 5Px, 5Qx, 5Rx, 5Tx, 5Ux, 5Vx, 5Wx, 5Xx, 6Bx, 6Cx, 6Fx, 6Gx, 6Hx, 6Jx, 6Kx, 6Lx, 6Mx, 6Nx, 6Px, 6Qx, 6Rx, 6Ux, 6Zx, 73x, 76x, 77x, 78x, 79x, 7Ax, 7Bx, 7Dx, 7Gx, 7Jx, 7Kx, 7Lx, 7Mx, 7Px, 7Rx, 7Sx, 7Tx, 7Ux, 7Vx, 7Wx, 7Xx, 7Yx, 7Zx, 82x, 83x, 84x, 87x, 88x, 8Cx, 8Dx, 8Ex • 0585-CTO, 44x, 52x, 53x, 54x, 55x, 56x, 5Ax, 5Bx, 5Dx, 5Fx, 5Hx, 5Kx, 5Mx, 5Px, 5Rx, 5Tx, 5Vx, 5Yx, 64x, 65x, 66x, 68x, 69x, 6Ax, 6Bx, 6Cx, 6Dx, 6Ex, 6Fx, 6Gx, 6Hx, 6Zx, 76x, 77x • 0591-CTO • 4403-CTO, 34x, 36x, 37x, 38x, 39x, 3Ax, 3Bx, 3Cx, 3Dx, 3Ex, 3Fx, 3Gx, 3Hx, 3Jx, 3Kx, 3Lx, 3Mx, 3Nx, 3Px, 3Qx, 3Rx, 3Sx, 3Tx, 3Ux, 3Vx, 4Bx, 4Cx, 4Dx, 4Ex, 4Fx, 4Gx, 4Hx, 4Jx, 4Kx, 4Lx, 4Mx, 53x, 54x, 59x, 5Ax, 5Bx, 5Cx, 5Dx, 5Ex, 5Fx, 5Gx, 5Hx, 5Jx, 5Kx, 5Lx, 5Mx, 5Nx, 5Px, 5Qx, 5Rx, 5Sx, 5Tx, 5Ux, 5Vx, 5Wx, 5Xx, 5Yx, 5Zx, 62x, 63x, 67x, 6Dx, 6Ex, 6Fx, 6Gx, 6Hx, 6Jx, 6Kx, 6Lx, 6Mx, 6Sx, 6Tx, 6Ux, 6Vx, 6Wx, 6Xx, 6Yx, 6Zx, 72x, 73x • 4404-CTO, 35x, 36x, 37x, 38x, 39x, 3Ax, 3Bx, 3Cx, 3Dx, 3Ex, 3Fx, 3Gx, 3Jx, 3Mx, 3Nx, 3Px, 3Qx, 3Rx, 3Sx, 3Tx, 3Ux, 3Vx, 3Wx, 3Xx, 3Yx, 3Zx, 42x, 43x, 44x, 45x, 46x, 47x, 48x, 49x, 4Ax, 4Bx, 4Cx, 4Dx, 4Ex, 4Fx, 4Gx, 4Hx, 4Jx, 4Kx, 4Mx, 4Nx, 4Px, 4Ux, 4Vx, 4Wx, 4Xx, 4Yx, 4Zx,	60Y5017	N

Table 40. Parts list—Overall (continued)

No.	FRU (Overall)	FRU no.	CRU ID
26	Palm rest assembly without fingerprint reader for SL510 and L510 • 2847-CTO, 22x, 23x, 24x, 25x, 26x, 27x, 28x, 29x, 2Ax, 2Bx, 2Cx, 2Dx, 2Ex, 2Fx, 2Gx, 2Hx, 2Jx, 2Kx, 2Lx, 2Mx, 2Nx, 2Rx, 2Sx, 2Tx, 2Ux, 2Vx, 2Wx, 2Xx, 2Yx, 2Zx, 33x, 37x, 38x, 39x, 3Kx, 3Lx, 3Qx, 3Vx, 3Wx, 3Xx, 3Yx, 3Zx, 42x, 43x, 44x, 45x, 46x, 47x, 4Ax, 4Bx, 4Cx, 4Dx, 4Hx, 4Jx, 4Wx, 4Xx, 4Yx, 4Zx, 52x, 53x, 54x, 55x, 56x, 57x, 58x, 59x, 5Cx, 5Dx, 5Ex, 5Fx, 5Gx, 5Hx, 5Jx, 5Kx, 5Lx, 5Mx, 5Nx, 5Px, 5Qx, 5Rx, 5Sx, 5Tx, 5Ux, 5Vx, 5Wx, 5Xx, 5Yx, 5Zx, 62x, 63x, 64x, 65x, 66x, 67x, 68x, 69x, 6Ax, 6Bx, 6Gx, 6Hx, 6Lx, 6Mx, 6Nx, 6Px, 6Qx, 6Rx, 6Sx, 6Tx, 6Ux, 6Vx, 6Wx, 6Xx, 6Yx, 6Zx, 78x, 79x, 7Ax, 7Bx, 7Cx, 7Dx, 7Ex, 7Fx, 7Jx, 7Kx, 7Lx, 7Mx, 7Nx, 7Px, 7Qx, 7Rx, 7Sx, 7Tx, 7Ux, 7Vx, 7Zx, 82x, 83x, 84x, 85x, 86x, 87x, 88x, 89x, 8Ax, 8Bx, 8Cx, 8Dx, 8Ex, 8Nx, 8Px, 8Qx, 8Sx, 8Tx, 8Yx, 8Zx, 92x, 93x, 94x, 95x, 96x, 97x, 98x, 99x, 9Fx, 9Jx, 9Kx, 9Lx, 9Mx, 9Nx, 9Px, 9Rx, 9Ux, 9Vx, 9Wx, 9Xx, 9Zx, A2x, A3x, A4x, A9x, ACx, ADx, AGx, AHx, AJx, AKx, ANx, APx, AQx, ARx, ASx, ATx, AUx, AVx, AWx, AXx, AYx, AZx, B3x, B4x, B5x, B6x, B7x, B8x, B9x, BAx, BBx, BJx, BKx, BSx, BTx, BUx, BVx, BWx, BXx, BYx, BZx, C2x, C3x, C4x, C5x, C6x, C7x, C8x, C9x, CAx, CBx, CCx, CDx, CEx, CFx, CGx, CHx, CJx, CKx, CLx, CMx, CPx, CQx, Q5x, Q6x, Q7x, Q8x, Q9x, QAx, QDx, QEx, QFx, QGx, QHx, R2x, R3x, R4x, R5x, R6x, R7x, R8x, R9x, RAx, RBx, RCx, RDx, RFx, RGx, RHx, RJx, RKx, RLx, RMx, RNx, RPx, RQx, RRx, RSx, RTx, RUx, RVx, RWx, RXx • 2873-CTO, 32x • 2875-CTO, 22x, 23x, 24x, 25x, 26x, 27x, 28x, 29x, 2Ax, 2Dx, 2Ex, 2Fx, 2Gx, 2Hx, 2Mx, 2Nx, 2Px, 2Qx, 2Rx, 2Sx, 2Tx, 2Ux, 2Vx, 2Wx, 2Xx, 2Yx, 32x, 33x, 35x, 39x, 3Ax, 3Mx, 3Nx, 3Px, 3Xx, 3Yx, 3Zx, 42x, 43x, 44x, 45x, 46x, 47x, 48x, 49x, 4Ax, 4Bx, 4Cx, 4Dx, 4Ex, 4Fx, 4Gx, 4Hx, 4Jx, 4Kx, 4Lx, 4Nx, 4Px, 4Qx, 4Rx, 4Sx, 4Tx, 4Ux, 4Vx, 4Wx, 4Yx, 52x, 53x, 54x, 55x, 56x, 57x, 5Bx, 5Cx, 5Dx, 5Ex, 5Hx, 5Jx, 5Kx, 5Lx, 5Mx, 5Nx, 5Px, 5Qx, 5Rx, 5Sx, R2x, R3x, R4x, R5x, R6x, R7x, R8x, R9x, RAx, RBx, RCx, RDx, RFx, RGx, RHx, RJx	60Y4134	N
26	Palm rest assembly with fingerprint reader for SL510 and L510 • 2847-CTO, 2Px, 2Qx, 34x, 35x, 36x, 3Dx, 3Ex, 3Mx, 3Nx, 3Px, 48x, 49x, 4Ex, 4Fx, 4Gx, 4Nx, 4Px, 4Qx, 4Rx, 4Sx, 4Tx, 4Ux, 4Vx, 5Ax, 5Bx, 6Cx, 6Dx, 6Ex, 6Fx, 6Jx, 6Kx, 72x, 73x, 74x, 75x, 76x, 77x, 7Wx, 7Xx, 7Yx, 8Fx, 8Gx, 8Hx, 8Jx, 8Kx, 8Lx, 8Mx, 8Rx, 8Ux, 8Vx, 8Wx, 8Xx, 9Ax, 9Bx, 9Cx, 9Dx, 9Ex, 9Gx, 9Hx, 9Qx, 9Sx, 9Tx, 9Yx, A5x, A6x, A7x, A8x, AAx, ABx, AEx, AFx, ALx, AMx, B2x, BCx, BDx, BEx, BFx, BGx, BHx, BMx, BNx, BPx, BQx, BRx, CNx, Q2x, Q3x, Q4x, QBx, QCx, QJx • 2873-CTO, 22x, 33x • 2875-CTO, 2Bx, 2Cx, 2Jx, 2Kx, 2Lx, 2Zx, 36x, 3Wx, 4Xx, 58x, 59x, 5Ax, 5Fx, 5Gx	60Y4136	N
26	Palm rest assembly without fingerprint reader for SL510 and L510, texture • 2847-CTO, CRx, CSx, CUx, CVx, CWx, CXx, CYx, CZx, D2x, D3x, D4x, D5x, D6x, D7x, D8x, D9x, DAx, DBx, DCx, DDx, DEx, DFx, DGx, DHx, DJx, DKx, DLx • 2873-CTO • 5072-all	04W0370	N

Table 40. Parts list—Overall (continued)

No.	FRU (Overall)	FRU no.	CRU ID
26	Palm rest assembly without fingerprint reader for L512 • 2550-CTO, 42x, 43x, 53x, 57x, 58x, 59x, 5Yx, 63x, 64x, 65x, 66x, 67x, 68x, 69x, 6Ax, 6Sx, 6Tx • 2597-CTO, 22x, 32x, 52x, 53x, 54x, 55x, 56x, 58x, 59x, 5Ax, 5Bx, 5Cx, 5Dx, 5Ex, 5Fx, 5Gx, 5Hx, 5Jx, 5Kx, 5Lx, 5Mx, 5Nx, 5Px, 5Qx, 5Rx, 5Sx, 5Tx, 5Xx, 5Yx, 65x, 6Ax, 6Bx, 6Cx, 6Dx, 6Ex, 6Fx, 6Gx, 6Hx, 6Px, 6Qx • 2598-CTO, 34x, 42x, 43x, 52x, 53x, 54x, 55x, 5Dx, 5Ex, 5Fx, 5Mx, 5Nx, 62x, 67x, 68x, 69x, 6Ax, 6Bx, 6Cx, 6Dx, 6Ex, 6Fx, 6Gx, 6Px, 6Qx, 6Rx, 6Sx, 6Tx, 73x, 74x, 79x, 7Ax, 7Ex, 7Fx, 7Gx, 7Hx, 7Jx, 7Kx, 7Vx, 7Wx, 7Yx, 82x, 83x, 84x, R2x, R3x • 2599-CTO, 52x, 53x • 4444-CTO, 32x, 33x, 35x, 39x, 3Ax, 3Bx, 3Cx, 3Dx, 3Ex, 3Fx, 3Gx, 3Hx, 3Jx, 3Kx, 3Lx, 3Mx, 3Px, 3Vx, 3Wx, 3Yx, 42x, 43x, 44x, 45x, 46x, 47x, 48x, 49x, 4Ax, 4Bx, 4Cx, 4Dx, 4Ex, 4Fx, 4Gx, 4Hx, 4Kx, 4Lx, 4Mx, 4Tx, 4Ux, 4Yx, 4Zx, 52x, 5Bx, 5Cx, 5Dx, 5Ex • 4447-CTO, 32x, 3Ex, 3Fx, 3Hx	75Y4616	N
26	Palm rest assembly with fingerprint reader for L512 • 2550-CTO, 44x, 52x, 54x, 55x, 5Ax, 5Bx, 5Dx, 5Fx, 5Hx, 5Kx, 5Mx, 5Px, 5Rx, 5Tx, 5Vx, 5Xx, 5Zx, 62x, 6Nx, 6Ux • 2597-CTO, 5Vx, 5Wx, 5Zx, 62x, 63x, 64x, 66x, 67x, 68x, 69x, 6Jx, 6Kx, 6Lx, 6Mx, 6Nx • 2598-CTO, 22x, 24x, 25x, 33x, 35x, 44x, 56x, 57x, 58x, 59x, 5Ax, 5Bx, 5Cx, 5Gx, 5Hx, 5Jx, 5Kx, 5Lx, 5Px, 5Qx, 5Rx, 5Sx, 5Tx, 5Vx, 5Wx, 5Xx, 5Yx, 5Zx, 63x, 64x, 65x, 66x, 6Jx, 6Kx, 6Lx, 6Nx, 6Ux, 6Vx, 6Wx, 6Xx, 6Yx, 6Zx, 72x, 75x, 76x, 77x, 78x, 7Bx, 7Cx, 7Dx, 7Qx, 7Rx, 7Sx, 7Tx, 7Ux, 7Xx, 7Zx, 85x • 2599-CTO • 4444-CTO, 34x, 36x, 37x, 38x, 3Nx, 3Qx, 3Rx, 3Sx, 3Tx, 3Ux, 3Zx, 4Jx, 4Nx, 4Px, 4Qx, 4Rx, 4Sx, 4Vx, 4Wx, 4Xx, 53x, 54x, 55x, 56x, 57x, 58x, 59x, 5Ax • 4447-CTO, 33x, 34x, 35x, 36x, 37x, 38x, 39x, 3Ax, 3Bx, 3Cx, 3Dx, 3Gx, 7Lx, 7Mx, 7Nx, 7Px	75Y4618	N
27	Keyboard (see “Keyboard” on page 252.)		
28	TrackPoint stick caps	91P9642	*
—	AC power adapter (see “Power cords” on page 256.)		

LCD FRUs

In ThinkPad SL410, L410, L412, SL510, L510, and L512, there are following types of LCDs.

- 14.0-inch HD LED-backlight LCD (Table 41 “Parts list—14.0-inch HD LCD” on page 232)
- 15.6-inch HD LED-backlight LCD (Table 42 “Parts list—15.6-inch HD LCD” on page 240)
- 15.6-inch HD+ LED-backlight LCDTable 43 “Parts list—15.6-inch HD+ LCD” on page 251

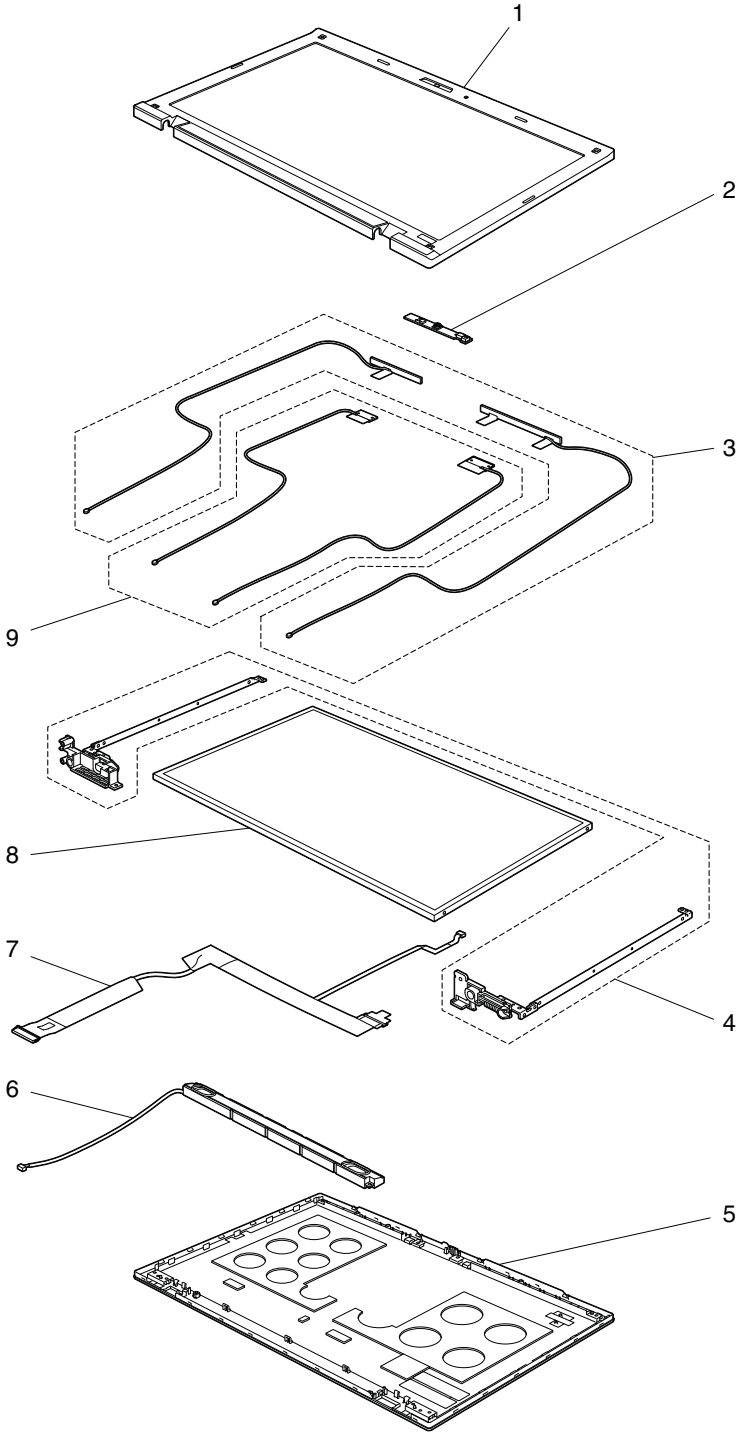
1
2
3
9
8
7
4
6
5

Table 41. Parts list—14.0-inch HD LCD

No.	FRU (14.0-inch HD LCD)	FRU no.	CRU ID
1	LCD front bezel for 14W	75Y4787	N
2	Integrated camera with microphone (0.3M) • 0616-CTO, 22x, 25x, 26x, 27x, 28x, 29x, 2Cx, 2Dx • 2842-CTO, 22x, 42x, 43x, 44x, 45x, 5Lx, 5Mx, 5Nx, 5Px, B7x, B8x, B9x, BAx, BBx, BZx, C2x, C3x, C4x, C5x, C7x, C8x, C9x, CAx, CBx, CQx, CRx, CSx, CUx, CVx, CWx, CXx, CYx, CZx, D2x, D3x, D4x, D5x, D6x, D7x, D8x, FCx, FDx, FEx, FFx, FGx, FHx, FJx, FKx, FLx, GQx, GRx, GYx, GZx, H2x, H3x, H4x, H5x, H6x, H7x, HEx, HFx, HGx, HHx, HSx, HTx, HUx, HVx, J5x, J7x, J9x, JAx, JBx, JDx, JEx, JFx, JGx, JLx, JMx, JNx, JPx, JQx, JRx, JSx, JTx, JUx, JVx, JWx, JXx, JYx, JZx, K2x, K3x, K4x, K5x, K6x, K7x, K8x, K9x, KAx, KBx, KCx, KDx, KEx, KFx, KGx, KHx, KJx, KKx, KLx, KMx, KNx, KPx, KQx, KRx, KSx, KTx, KUx, KVx, KWx, KXx, KYx, KZx, L3x, L4x, L5x, L6x, L7x • 2874-CTO, 46x, 47x, 66x, 67x, 68x, 69x, 6Ax, 6Bx, 6Cx, 6Tx, 6Xx, 75x, 76x, 77x, 78x, 79x, 7Ux, 7Vx, 7Wx, 7Xx, 7Yx, 7Zx, 87x, 88x, 89x, 8Ax, 8Bx, 8Cx, 8Dx, 8Ex, 8Gx, 8Jx, 8Kx, 8Mx, 8Nx • 2931-CTO, 23x, 28x, 29x, 2Ax, 2Bx	60Y3325	N

Table 41. Parts list—14.0-inch HD LCD (continued)

No.	FRU (14.0-inch HD LCD)	FRU no.	CRU ID
2	Integrated camera with microphone (2.0M) • 2842-CTO, 23x, 24x, 25x, 26x, 27x, 28x, 29x, 2Ax, 2Bx, 2Cx, 2Dx, 2Ex, 33x, 35x, 36x, 37x, 39x, 3Bx, 3Dx, 3Fx, 3Hx, 3Qx, 3Sx, 3Tx, 3Ux, 3Vx, 47x, 48x, 49x, 4Ax, 4Bx, 4Cx, 4Dx, 4Ex, 4Fx, 4Gx, 4Hx, 4Jx, 4Kx, 4Lx, 4Mx, 4Nx, 4Px, 4Qx, 4Rx, 4Sx, 4Tx, 4Ux, 4Vx, 4Wx, 4Xx, 4Zx, 53x, 54x, 55x, 56x, 59x, 5Ax, 5Bx, 5Ex, 5Fx, 5Hx, 5Jx, 5Kx, 5Qx, 5Rx, 5Sx, 5Tx, 5Ux, 5Vx, 5Wx, 5Xx, 5Yx, 5Zx, 62x, 63x, 64x, 65x, 66x, 67x, 68x, 69x, 6Ax, 6Bx, 6Cx, 6Dx, 6Ex, 6Fx, 6Gx, 6Hx, 6Jx, 6Kx, 6Lx, 6Mx, 6Nx, 6Px, 6Qx, 6Rx, 6Sx, 6Tx, 6Ux, 6Vx, 6Wx, 6Xx, 6Yx, 6Zx, 72x, 73x, 74x, 75x, 76x, 77x, 7Bx, 7Cx, 7Dx, 7Ex, 7Fx, 7Gx, 7Hx, 7Jx, 7Px, 7Qx, 7Rx, 7Sx, 7Tx, 7Ux, 7Vx, 7Wx, 7Xx, 7Yx, 7Zx, 82x, 83x, 84x, 85x, 86x, 8Ex, 8Fx, 8Gx, 8Hx, 8Jx, 8Kx, 8Lx, 8Mx, 8Nx, 8Rx, 8Sx, 8Tx, 8Ux, 8Vx, 8Wx, 8Xx, 8Yx, 8Zx, 9Ax, 9Bx, 9Cx, 9Dx, 9Ex, 9Fx, 9Gx, 9Hx, 9Jx, 9Kx, 9Lx, 9Mx, 9Nx, 9Px, 9Qx, 9Rx, A2x, A3x, A4x, A5x, A6x, A7x, A8x, A9x, AAx, ABx, ACx, ADx, AEx, AFx, AGx, AHx, AJx, AKx, AMx, ANx, APx, AQx, ARx, ASx, ATx, AUx, AVx, AWx, AXx, AYx, AZx, B2x, B3x, B4x, B5x, B6x, BCx, BDx, BEx, BFx, BGx, BHx, BJx, BKx, BMx, BNx, BPx, BQx, BRx, BSx, BTx, BUx, BVx, BWx, BXx, BYx, C6x, CCx, CDx, CEx, CFx, CGx, CHx, CJx, CKx, CLx, CMx, CNx, CPx, D9x, DAx, DBx, DCx, DDx, DEx, DFx, DGx, DHx, DJx, DKx, DLx, DMx, DNx, DPx, DQx, DRx, DSx, DTx, DUx, DVx, DWx, DXx, DYx, DZx, E2x, E3x, E4x, E5x, E6x, E7x, E8x, E9x, EAx, EBx, ECx, EDx, EEx, EFx, EGx, EHx, EJx, EKx, ELx, EMx, ENx, EPx, EQx, ERx, ESx, ETx, EUx, EVx, EWx, EXx, EYx, EZx, F2x, F3x, F4x, F5x, F6x, F7x, F8x, F9x, FAx, FBx, FMx, FNx, FPx, FQx, FSx, FTx, FUx, FVx, FWx, FXx, FYx, FZx, G2x, G3x, G4x, G5x, G6x, G7x, G8x, G9x, GBx, GCx, GDx, GEx, GFx, GGx, GHx, GJx, GKx, GLx, GMx, GNx, GPx, GSx, GTx, GUx, GVx, GWx, GXx, H8x, H9x, HAx, HBx, HCx, HDx, HJx, HKx, HLx, HMx, HNx, HPx, HQx, HRx, HWx, HXx, HYx, HZx, J2x, J3x, J4x, J6x, J8x, JCx, JHx, JJx, JKx • 2874-CTO, 34x, 36x, 37x, 39x, 3Bx, 3Ex, 3Gx, 3Kx, 3Rx, 3Sx, 48x, 49x, 4Ax, 4Bx, 4Fx, 4Jx, 4Kx, 4Lx, 4Px, 4Qx, 52x, 53x, 54x, 55x, 56x, 57x, 58x, 59x, 5Jx, 5Kx, 5Lx, 5Mx, 5Nx, 5Px, 5Qx, 5Rx, 62x, 63x, 64x, 65x, 6Dx, 6Ex, 6Fx, 6Gx, 6Hx, 6Jx, 6Kx, 6Lx, 6Mx, 6Nx, 6Px, 6Qx, 6Rx, 6Sx, 6Ux, 6Vx, 6Wx, 6Yx, 6Zx, 72x, 73x, 7Ax, 7Bx, 7Cx, 7Dx, 7Ex, 7Fx, 7Gx, 7Hx, 7Jx, 7Kx, 7Lx, 7Mx, 7Nx, 7Px, 7Qx, 7Rx, 7Sx, 7Tx, 82x, 83x, 84x, 85x, 86x, 8Hx, 8Lx • 2931-CTO, 22x, 24x, 25x, 26x, 27x • 0530-CTO • 0553-CTO, 22x, 24x, 25x, 33x, 35x, 36x, 43x, 44x, 53x, 54x, 56x, 57x, 58x, 59x, 5Cx, 5Fx, 5Jx, 5Kx, 5Lx, 5Mx, 5Nx, 5Px, 5Qx, 5Rx, 5Yx, 5Zx, 62x, 63x, 64x, 65x, 66x, 67x, 68x, 69x, 6Bx, 6Cx, 6Dx, 6Fx, 6Gx, 6Hx, 6Jx, 6Kx, 6Lx, 6Mx, 6Nx, 6Sx, 6Tx, 6Ux, 6Vx, 6Wx, 6Xx, 6Yx, 6Zx, 73x, 75x, 76x, 77x, 78x, 79x, 7Ax, 7Bx, 7Dx, 7Fx, 7Gx, 7Hx, 7Jx, 7Kx, 7Lx, 7Mx, 7Nx, 7Px, 7Qx, 7Rx, 7Sx, 7Tx, 7Ux, 7Vx, 7Wx, 7Xx, 7Yx, 7Zx, 82x, 83x, 84x, 85x, 86x, 87x, 88x, 89x, 8Ax, 8Bx, 8Cx, 8Dx, 8Ex • 0585-CTO, 43x, 44x, 54x, 55x, 56x, 5Bx, 5Dx, 5Fx, 5Hx, 5Kx, 5Mx, 5Px, 5Rx, 5Tx, 5Vx, 65x, 66x, 67x, 68x, 69x, 6Ax, 6Bx, 6Cx, 6Dx, 6Ex, 6Fx, 6Gx, 6Hx, 6Jx, 6Kx, 6Lx, 6Mx, 6Nx, 6Px, 6Qx, 6Rx, 6Sx, 6Tx, 6Ux, 6Xx, 6Yx, 6Zx, 75x, 76x, 77x • 0591-CTO, 52x, 53x • 4403-CTO, 32x, 33x, 34x, 36x, 37x, 38x, 39x, 3Ax, 3Bx, 3Cx, 3Dx, 3Ex, 3Fx, 3Gx, 3Hx, 3Jx, 3Kx, 3Lx, 3Mx, 3Nx, 3Px, 3Qx, 3Rx, 3Sx, 3Tx, 3Ux, 3Vx, 3Wx, 3Xx, 3Yx, 3Zx, 42x, 43x, 45x, 46x, 47x, 48x, 49x, 4Ax, 4Bx, 4Cx, 4Dx, 4Ex, 4Fx, 4Gx, 4Hx, 4Jx, 4Kx, 4Lx, 4Mx, 4Nx, 4Px, 4Rx, 4Sx, 4Tx, 4Ux, 4Vx, 4Wx, 4Xx, 4Yx, 4Zx, 52x, 53x, 54x, 55x, 56x, 58x, 59x, 5Ax, 5Bx, 5Cx, 5Dx, 5Ex, 5Fx, 5Gx, 5Hx, 5Jx, 5Kx, 5Lx, 5Mx, 5Nx, 5Px, 5Qx, 5Rx, 5Sx, 5Tx, 5Ux, 5Vx, 5Wx, 5Xx, 5Yx, 5Zx, 62x, 63x, 64x, 65x, 66x, 67x, 68x, 69x, 6Ax, 6Bx, 6Cx, 6Dx, 6Ex, 6Fx, 6Gx, 6Hx, 6Jx, 6Kx, 6Nx, 6Px, 6Qx, 6Rx, 6Sx, 6Tx, 6Ux, 6Vx, 6Wx, 6Xx, 6Yx, 6Zx, 72x, 73x, 74x, 75x, 76x, 77x • 4404-CTO, 32x, 33x, 34x, 35x, 36x, 37x, 38x, 39x, 3Ax, 3Bx, 3Cx, 3Dx, 3Ex, 3Fx, 3Gx, 3Hx, 3Jx, 3Kx, 3Lx, 3Mx, 3Nx, 3Px, 3Qx, 3Rx, 3Sx, 3Tx, 3Ux, 3Vx, 3Wx, 3Xx, 3Yx, 3Zx, 42x, 43x, 44x, 45x, 46x, 47x, 48x, 49x, 4Ax, 4Bx, 4Cx, 4Dx, 4Ex, 4Fx, 4Gx, 4Hx, 4Jx, 4Kx, 4Lx, 4Mx, 4Nx, 4Px, 4Qx, 4Rx, 4Sx, 4Tx, 4Ux, 4Vx, 4Wx, 4Xx, 4Yx, 4Zx	60Y3327	N

Table 41. Parts list—14.0-inch HD LCD (continued)

No.	FRU (14.0-inch HD LCD)	FRU no.	CRU ID
2	Microphone • 0616-CTO • 2842-CTO, 34x, 3Gx, 3Px, 3Rx, 46x, 4Yx, 52x, 57x, 58x, 5Cx, 5Dx, 5Gx, 78x, 87x, 88x, 89x, 8Ax, 8Bx, 8Cx, 8Dx, 92x, 93x, 94x, 95x, 96x, 97x, 98x, 99x, 9Sx, 9Tx, 9Ux, 9Vx, 9Wx, 9Xx, 9Yx, 9Zx, ALx, L2x • 2874-CTO, 22x, 32x, 33x, 35x, 3Lx, 3Mx, 3Nx, 3Px, 3Qx, 4Cx, 4Dx, 4Gx, 4Hx, 4Mx, 4Nx, 5Ax, 5Bx, 5Cx, 5Dx, 5Ex, 5Fx, 5Gx, 5Hx, 74x, 8Fx • 2931-CTO • 0530-CTO, 5Fx, 5Kx, 6Lx, 6Mx • 0553-CTO, 42x, 52x, 55x, 5Ax, 5Bx, 5Dx, 5Ex, 5Gx, 5Hx, 5Tx, 5Ux, 5Vx, 5Wx, 5Xx, 6Px, 6Qx, 6Rx, 72x, 74x, 7Cx, 7Ex, R2x, R3x • 0585-CTO, 42x, 52x, 53x, 57x, 58x, 59x, 5Ax, 5Yx, 64x, 74x • 0591-CTO • 4403-CTO, 35x, 44x, 57x, 6Lx, 6Mx • 4404-CTO	60Y3329	N
3	Wireless WAN antenna set 14W • 2842-CTO, 22x, 26x, 28x, 2Bx, 2Dx, 3Tx, 3Vx, 8Rx, AHx, AKx, B8x, BBx, DHx, DKx, FMx, FNx, FPx, FQx, FSx, FTx, FUx, FVx, G6x • 2931-CTO, 22x, 23x, 24x • 0530-CTO, 52x, 54x, 56x, 62x, 63x, 64x, 65x, 66x, 67x, 6Ex, 6Fx, 6Gx, 6Mx • 0553-CTO, 24x, 25x, 35x, 36x, 42x, 43x, 44x, 54x, 55x, 56x, 57x, 58x, 59x, 5Cx, 5Fx, 5Lx, 5Px, 5Qx, 6Hx, 6Jx, 6Mx, 6Nx, 6Rx, 6Sx, 6Tx, 6Wx, 6Xx, 6Yx, 6Zx, 72x, 73x, 74x, 75x, 76x, 77x, 79x, 7Ax, 7Fx, 7Jx, 7Kx, 7Rx, 7Sx, 7Tx, 7Ux, 7Yx, 7Zx, 82x, 83x, 84x, 87x, 88x, 8Ax, 8Bx, 8Cx, 8Ex, R3x • 0585-CTO, 42x, 43x, 44x, 54x, 55x, 56x, 64x, 65x, 66x, 67x, 68x, 69x, 6Ax, 6Bx, 6Cx, 6Dx, 6Ex, 6Fx, 6Gx, 6Hx, 6Px, 6Qx, 6Xx, 6Yx, 6Zx, 74x, 75x, 76x, 77x • 0591-CTO, 52x, 53x • 4403-CTO, 32x, 33x, 34x, 37x, 38x, 39x, 4Kx, 4Lx, 4Mx, 53x, 54x, 58x, 64x, 65x, 66x, 67x, 68x, 69x, 6Ax, 6Bx, 6Hx, 6Jx, 6Kx, 6Yx, 6Zx, 72x, 73x, 75x, 76x • 4404-CTO, 32x, 33x, 34x, 35x, 3Gx, 3Hx, 3Jx, 3Kx, 3Lx, 3Mx, 3Nx, 3Px, 3Qx, 3Rx, 3Sx, 3Tx, 3Ux, 3Vx, 3Wx, 4Lx	45M2852	N
4	Hinges 14W	60Y4347	N
4	Hinges 14W	60Y4348	N
5	LCD cover kit, paint 14W (with logo) • 2842-CTO, 22x, 23x, 24x, 25x, 26x, 27x, 28x, 29x, 2Ax, 2Bx, 2Cx, 2Dx, 2Ex, 33x, 34x, 35x, 36x, 37x, 39x, 3Bx, 3Dx, 3Fx, 3Gx, 3Hx, 3Sx, 3Tx, 3Ux, 3Vx, 44x, 46x, 5Ex, 5Fx, 5Gx, 5Hx, 5Jx, 5Kx, 7Bx, 7Cx, 7Dx, 7Ex, 7Fx, 7Gx, 7Hx, 7Jx, 7Px, 7Xx, AGx, AHx, AJx, AKx, ALx, B7x, B8x, B9x, BAx, BBx, BNx, BPx, BQx, BRx, BSx, BTx, BUx, CMx, CNx, CPx, DGx, DHx, DJx, DKx, DLx, DMx, DNx, E2x, E3x, E4x, E5x, E6x, E7x, E8x, E9x, F7x, F8x, F9x, FAx, FBx, GDx, GEx, GFx, GKx, GLx, GMx, GNx, GPx, GWx, GXx, H6x, H7x, H9x, HAx, HCx, HDx, HEx, HJx, HSx, HTx, HUx, HVx, HXx, HYx, HZx, J2x, J3x, J4x, JDx, JEx, JFx, JGx, JHx, JJx, JKx, JLx, JMx, JNx, JPx • 2874-CTO, 32x, 33x, 34x, 35x, 36x, 37x, 39x, 3Bx, 3Ex, 3Gx, 3Mx, 4Fx, 6Cx, 6Mx, 6Nx, 6Tx, 6Ux, 6Vx, 6Wx, 77x, 78x, 79x, 7Ax, 7Px, 7Qx, 7Rx, 7Sx, 7Tx, 7Ux, 7Zx, 83x, 87x, 88x, 89x, 8Ax, 8Bx, 8Cx • 2931-CTO, 22x, 23x, 24x, 25x, 26x, 27x • 0530-all • 0553-all • 0585-all • 0591-all • 4403-all • 4404-all	75Y4785	N

Table 41. Parts list—14.0-inch HD LCD (continued)

No.	FRU (14.0-inch HD LCD)	FRU no.	CRU ID
5	LCD cover kit, IMR (In Mold Releases) 14W (with logo) • 2842-CTO, 3Px, 3Qx, 3Rx, 42x, 43x, 45x, 47x, 48x, 49x, 4Ax, 4Bx, 4Cx, 4Dx, 4Ex, 4Fx, 4Gx, 4Hx, 4Jx, 4Kx, 4Lx, 4Mx, 4Nx, 4Px, 4Qx, 4Rx, 4Sx, 4Tx, 4Ux, 4Vx, 4Wx, 4Xx, 4Yx, 4Zx, 52x, 53x, 54x, 55x, 56x, 57x, 58x, 59x, 5Ax, 5Bx, 5Cx, 5Dx, 5Lx, 5Mx, 5Nx, 5Px, 5Qx, 5Rx, 5Sx, 5Tx, 5Ux, 5Vx, 5Wx, 5Xx, 5Yx, 5Zx, 62x, 63x, 64x, 65x, 66x, 67x, 68x, 69x, 6Ax, 6Bx, 6Cx, 6Dx, 6Ex, 6Fx, 6Gx, 6Hx, 6Jx, 6Kx, 6Lx, 6Mx, 6Nx, 6Px, 6Qx, 6Rx, 6Sx, 6Tx, 6Ux, 6Vx, 6Wx, 6Xx, 6Yx, 6Zx, 72x, 73x, 74x, 75x, 76x, 77x, 78x, 7Qx, 7Rx, 7Sx, 7Tx, 7Ux, 7Vx, 7Wx, 7Yx, 7Zx, 82x, 83x, 84x, 85x, 86x, 87x, 88x, 89x, 8Ax, 8Bx, 8Cx, 8Dx, 8Ex, 8Fx, 8Gx, 8Hx, 8Jx, 8Kx, 8Lx, 8Mx, 8Nx, 8Rx, 8Sx, 8Tx, 8Ux, 8Vx, 8Wx, 8Xx, 8Yx, 8Zx, 92x, 93x, 94x, 95x, 96x, 97x, 98x, 99x, 9Ax, 9Bx, 9Cx, 9Dx, 9Ex, 9Fx, 9Gx, 9Hx, 9Jx, 9Kx, 9Lx, 9Mx, 9Nx, 9Px, 9Qx, 9Rx, 9Sx, 9Tx, 9Ux, 9Vx, 9Wx, 9Xx, 9Yx, 9Zx, A2x, A3x, A4x, A5x, A6x, A7x, A8x, A9x, AAx, ABx, ACx, ADx, AEx, AFx, AMx, ANx, APx, AQx, ARx, ASx, ATx, AUx, AVx, AWx, AXx, AYx, AZx, B2x, B3x, B4x, B5x, B6x, BCx, BDx, BEx, BFx, BGx, BHx, BJx, BKx, BMx, BVx, BWx, BXx, BYx, BZx, C2x, C3x, C4x, C5x, C6x, C7x, C8x, C9x, CAx, CBx, CCx, CDx, CEx, CFx, CGx, CHx, CJx, CKx, CLx, CQx, CRx, CSx, CUx, CVx, CWx, CXx, CYx, CZx, D2x, D3x, D4x, D5x, D6x, D7x, D8x, D9x, DAx, DBx, DCx, DDx, DEx, DFx, DPx, DQx, DRx, DSx, DTx, DUx, DVx, DWx, DXx, DYx, DZx, EAx, EBx, ECx, EDx, EEx, EFx, EGx, EHx, EJx, EKx, ELx, EMx, ENx, EPx, EQx, ERx, ESx, ETx, EUx, EVx, EWx, EXx, EYx, EZx, F2x, F3x, F4x, F5x, F6x, FCx, FDx, FEx, FFx, FGx, FHx, FJx, FKx, FLx, FMx, FNx, FPx, FQx, FSx, FTx, FUx, FVx, FWx, FXx, FYx, FZx, G2x, G3x, G4x, G5x, G6x, G7x, G8x, G9x, GBx, GCx, GGx, GHx, GJx, GQx, GRx, GSx, GTx, GUx, GVx, GYx, GZx, H2x, H3x, H5x, H8x, HBx, HFx, HGx, HHx, HKx, HLx, HMx, HNx, HPx, HQx, HRx, HWx, J5x, J6x, J7x, J8x, J9x, JAx, JBx, JCx • 2874-CTO, 22x, 3Kx, 3Lx, 3Nx, 3Px, 3Qx, 3Rx, 3Sx, 46x, 47x, 48x, 49x, 4Ax, 4Bx, 4Cx, 4Dx, 4Gx, 4Hx, 4Jx, 4Kx, 4Lx, 4Mx, 4Nx, 4Px, 4Qx, 52x, 53x, 54x, 55x, 56x, 57x, 58x, 59x, 5Ax, 5Bx, 5Cx, 5Dx, 5Ex, 5Fx, 5Gx, 5Hx, 5Jx, 5Kx, 5Lx, 5Mx, 5Nx, 5Px, 5Qx, 5Rx, 62x, 63x, 64x, 65x, 66x, 67x, 68x, 69x, 6Ax, 6Bx, 6Dx, 6Ex, 6Fx, 6Gx, 6Hx, 6Jx, 6Kx, 6Lx, 6Px, 6Qx, 6Rx, 6Sx, 6Xx, 6Yx, 6Zx, 72x, 73x, 74x, 75x, 76x, 7Bx, 7Cx, 7Dx, 7Ex, 7Fx, 7Gx, 7Hx, 7Jx, 7Kx, 7Lx, 7Mx, 7Nx, 7Vx, 7Wx, 7Xx, 7Yx, 82x, 84x, 85x, 86x, 8Dx, 8Ex, 8Fx, 8Gx, 8Hx, 8Jx, 8Kx, 8Lx, 8Mx, 8Nx	60Y5345	N
5	LCD cover kit, Texture 14W (with logo) • 0616-all • 2842-CTO, JQx, JRx, JSx, JTx, JUx, JVx, JWx, JXx, JYx, JZx, K2x, K3x, K4x, K5x, K6x, K7x, K8x, K9x, KAx, KBx, KCx, KDx, KEx, KFx, KGx, KHx, KJx, KKx, KLx, KMx, KNx, KPx, KQx, KRx, KSx, KTx, KUx, KVx, KWx, KXx, KYx, KZx, L2x, L3x, L4x, L5x, L6x, L7x • 2931-CTO, 28x, 29x, 2Ax, 2Bx	04W0373	N
6	Speaker assembly for 14W	60Y3333	N

Table 41. Parts list—14.0-inch HD LCD (continued)

No.	FRU (14.0-inch HD LCD)	FRU no.	CRU ID
7	LCD cable, HD, Teflon 14W • 0616-all • 2842-CTO, 23x, 24x, 25x, 27x, 29x, 2Ax, 2Cx, 2Ex, 33x, 34x, 35x, 36x, 37x, 39x, 3Bx, 3Dx, 3Fx, 3Gx, 3Hx, 3Px, 3Qx, 3Rx, 3Sx, 3Ux, 42x, 43x, 44x, 45x, 46x, 47x, 48x, 49x, 4Ax, 4Bx, 4Cx, 4Dx, 4Ex, 4Fx, 4Gx, 4Hx, 4Jx, 4Kx, 4Lx, 4Mx, 4Nx, 4Px, 4Qx, 4Rx, 4Sx, 4Tx, 4Ux, 4Vx, 4Wx, 4Xx, 4Yx, 4Zx, 52x, 53x, 54x, 55x, 56x, 57x, 58x, 59x, 5Ax, 5Bx, 5Cx, 5Dx, 5Ex, 5Fx, 5Gx, 5Hx, 5Jx, 5Kx, 5Lx, 5Mx, 5Nx, 5Px, 5Qx, 5Rx, 5Sx, 5Tx, 5Ux, 5Vx, 5Wx, 5Xx, 5Yx, 5Zx, 62x, 63x, 64x, 65x, 66x, 67x, 68x, 69x, 6Ax, 6Bx, 6Cx, 6Dx, 6Ex, 6Fx, 6Gx, 6Hx, 6Jx, 6Kx, 6Lx, 6Mx, 6Nx, 6Px, 6Qx, 6Rx, 6Sx, 6Tx, 6Ux, 6Vx, 6Wx, 6Xx, 6Yx, 6Zx, 72x, 73x, 74x, 75x, 76x, 77x, 78x, 7Bx, 7Cx, 7Dx, 7Ex, 7Fx, 7Gx, 7Hx, 7Jx, 7Px, 7Qx, 7Rx, 7Sx, 7Tx, 7Ux, 7Vx, 7Wx, 7Xx, 7Yx, 7Zx, 82x, 83x, 84x, 85x, 86x, 87x, 88x, 89x, 8Ax, 8Bx, 8Cx, 8Dx, 8Ex, 8Fx, 8Gx, 8Hx, 8Jx, 8Kx, 8Lx, 8Mx, 8Nx, 8Sx, 8Tx, 8Ux, 8Vx, 8Wx, 8Xx, 8Yx, 8Zx, 92x, 93x, 94x, 95x, 96x, 97x, 98x, 99x, 9Ax, 9Bx, 9Cx, 9Dx, 9Ex, 9Fx, 9Gx, 9Hx, 9Jx, 9Kx, 9Lx, 9Mx, 9Nx, 9Px, 9Qx, 9Rx, 9Sx, 9Tx, 9Ux, 9Vx, 9Wx, 9Xx, 9Yx, 9Zx, A2x, A3x, A4x, A5x, A6x, A7x, A8x, A9x, AAx, ABx, ACx, ADx, AEx, AFx, AGx, AJx, ALx, AMx, ANx, APx, AQx, ARx, ASx, ATx, AUx, AVx, AWx, AXx, AYx, AZx, B2x, B3x, B4x, B5x, B6x, B7x, B9x, BAx, BCx, BDx, BEx, BFx, BGx, BHx, BJx, BKx, BMx, BNx, BPx, BQx, BRx, BSx, BTx, BUx, BVx, BWx, BXx, BYx, BZx, C2x, C3x, C4x, C5x, C6x, C7x, C8x, C9x, CAx, CBx, CCx, CDx, CEx, CFx, CGx, CHx, CJx, CKx, CLx, CMx, CNx, CPx, CQx, CRx, CSx, CUx, CVx, CWx, CXx, CYx, CZx, D2x, D3x, D4x, D5x, D6x, D7x, D8x, D9x, DAx, DBx, DCx, DDx, DEx, DFx, DGx, DJx, DLx, DMx, DNx, DPx, DQx, DRx, DSx, DTx, DUx, DVx, DWx, DXx, DYx, DZx, E2x, E3x, E4x, E5x, E6x, E7x, E8x, E9x, EAx, EBx, ECx, EDx, EEx, EFx, EGx, EHx, EJx, EKx, ELx, EMx, ENx, EPx, EQx, ERx, ESx, ETx, EUx, EVx, EWx, EXx, EYx, EZx, F2x, F3x, F4x, F5x, F6x, F7x, F8x, F9x, FAx, FBx, FCx, FDx, FEx, FFx, FGx, FHx, FJx, FKx, FLx, FWx, FXx, FYx, FZx, G2x, G3x, G4x, G5x, G7x, G8x, G9x, GBx, GCx, GDx, GEx, GFx, GGx, GHx, GJx, GKx, GLx, GMx, GNx, GPx, GQx, GRx, GSx, GTx, GUx, GVx, GWx, GXx, GYx, GZx, H2x, H3x, H4x, H5x, H6x, H7x, H8x, H9x, HAx, HBx, HCx, HDx, HEx, HFx, HGx, HHx, HJx, HKx, HLx, HMx, HNx, HPx, HQx, HRx, HSx, HTx, HUx, HVx, HWx, HXx, HYx, HZx, J2x, J3x, J4x, J5x, J6x, J7x, J8x, J9x, JAx, JBx, JCx, JDx, JEx, JFx, JGx, JHx, JJx, JKx, JLx, JMx, JNx, JPx, JQx, JRx, JSx, JTx, JUx, JVx, JWx, JXx, JYx, JZx, K2x, K3x, K4x, K5x, K6x, K7x, K8x, K9x, KAx, KBx, KCx, KDx, KEx, KFx, KGx, KHx, KJx, KKx, KLx, KMx, KNx, KPx, KQx, KRx, KSx, KTx, KUx, KVx, KWx, KXx, KYx, KZx, L2x, L3x, L4x, L5x, L6x, L7x • 2874-all • 2931-CTO, 25x, 26x, 27x, 28x, 29x, 2Ax, 2Bx (to be continued)	45M2855	N

Table 41. Parts list—14.0-inch HD LCD (continued)

No.	FRU (14.0-inch HD LCD)	FRU no.	CRU ID
7	(continued) LCD cable, HD, Teflon 14W • 0530-CTO, 22x, 32x, 53x, 55x, 57x, 59x, 5Ax, 5Bx, 5Cx, 5Dx, 5Ex, 5Fx, 5Gx, 5Jx, 5Kx, 5Lx, 5Mx, 5Nx, 5Px, 5Qx, 5Rx, 5Sx, 5Tx, 5Ux, 5Vx, 5Wx, 5Xx, 5Zx, 68x, 69x, 6Ax, 6Bx, 6Cx, 6Dx, 6Hx, 6Jx, 6Kx, 6Lx, 6Nx • 0553-CTO, 22x, 33x, 52x, 53x, 5Ax, 5Bx, 5Dx, 5Ex, 5Gx, 5Hx, 5Jx, 5Kx, 5Mx, 5Nx, 5Rx, 5Tx, 5Ux, 5Vx, 5Wx, 5Xx, 5Yx, 5Zx, 62x, 63x, 64x, 65x, 66x, 67x, 68x, 69x, 6Bx, 6Cx, 6Dx, 6Fx, 6Gx, 6Kx, 6Lx, 6Px, 6Qx, 6Ux, 6Vx, 78x, 7Bx, 7Cx, 7Dx, 7Ex, 7Gx, 7Hx, 7Lx, 7Mx, 7Nx, 7Px, 7Qx, 7Vx, 7Wx, 7Xx, 85x, 86x, 89x, 8Dx, R2x • 0585-CTO, 52x, 53x, 57x, 58x, 59x, 5Ax, 5Bx, 5Dx, 5Fx, 5Hx, 5Kx, 5Mx, 5Px, 5Rx, 5Tx, 5Vx, 5Yx, 6Jx, 6Kx, 6Lx, 6Mx, 6Nx, 6Rx, 6Sx, 6Tx, 6Ux • 0591-CTO • 4403-CTO, 35x, 36x, 3Ax, 3Bx, 3Cx, 3Dx, 3Ex, 3Fx, 3Gx, 3Hx, 3Jx, 3Kx, 3Lx, 3Mx, 3Nx, 3Px, 3Qx, 3Rx, 3Sx, 3Tx, 3Ux, 3Vx, 3Wx, 3Xx, 3Yx, 3Zx, 42x, 43x, 44x, 45x, 46x, 47x, 48x, 49x, 4Ax, 4Bx, 4Cx, 4Dx, 4Ex, 4Fx, 4Gx, 4Hx, 4Jx, 4Nx, 4Px, 4Rx, 4Sx, 4Tx, 4Ux, 4Vx, 4Wx, 4Xx, 4Yx, 4Zx, 52x, 55x, 56x, 57x, 59x, 5Ax, 5Bx, 5Cx, 5Dx, 5Ex, 5Fx, 5Gx, 5Hx, 5Jx, 5Kx, 5Lx, 5Mx, 5Nx, 5Px, 5Qx, 5Rx, 5Sx, 5Tx, 5Ux, 5Vx, 5Wx, 5Xx, 5Yx, 5Zx, 62x, 63x, 6Cx, 6Dx, 6Ex, 6Fx, 6Gx, 6Lx, 6Mx, 6Nx, 6Px, 6Qx, 6Rx, 6Sx, 6Tx, 6Ux, 6Vx, 6Wx, 6Xx, 74x, 77x • 4404-CTO, 36x, 37x, 38x, 39x, 3Ax, 3Bx, 3Cx, 3Dx, 3Ex, 3Fx, 3Xx, 3Yx, 3Zx, 42x, 43x, 44x, 45x, 46x, 47x, 48x, 49x, 4Ax, 4Bx, 4Cx, 4Dx, 4Ex, 4Fx, 4Gx, 4Hx, 4Jx, 4Kx, 4Mx, 4Nx, 4Px, 4Qx, 4Rx, 4Sx, 4Tx, 4Ux, 4Vx, 4Wx, 4Xx, 4Yx, 4Zx	45M2855	N
7	LCD cable, HD, Coaxial 14W • 2842-CTO, 22x, 26x, 28x, 2Bx, 2Dx, 3Tx, 3Vx, 8Rx, AHx, AKx, B8x, BBx, DHx, DKx, FMx, FNx, FPx, FQx, FSx, FTx, FUx, FVx, G6x • 2931-CTO, 22x, 23x, 24x • 0530-CTO, 52x, 54x, 56x, 62x, 63x, 64x, 65x, 66x, 67x, 6Ex, 6Fx, 6Gx, 6Mx • 0553-CTO, 24x, 25x, 35x, 36x, 42x, 43x, 44x, 54x, 55x, 56x, 57x, 58x, 59x, 5Cx, 5Fx, 5Lx, 5Px, 5Qx, 6Hx, 6Jx, 6Mx, 6Nx, 6Rx, 6Sx, 6Tx, 6Wx, 6Xx, 6Yx, 6Zx, 72x, 73x, 74x, 75x, 76x, 77x, 79x, 7Ax, 7Fx, 7Jx, 7Kx, 7Rx, 7Sx, 7Tx, 7Ux, 7Yx, 7Zx, 82x, 83x, 84x, 87x, 88x, 8Ax, 8Bx, 8Cx, 8Ex, R3x • 0585-CTO, 42x, 43x, 44x, 54x, 55x, 56x, 64x, 65x, 66x, 67x, 68x, 69x, 6Ax, 6Bx, 6Cx, 6Dx, 6Ex, 6Fx, 6Gx, 6Hx, 6Px, 6Qx, 6Xx, 6Yx, 6Zx, 74x, 75x, 76x, 77x • 0591-CTO, 52x, 53x • 4403-CTO, 32x, 33x, 34x, 37x, 38x, 39x, 4Kx, 4Lx, 4Mx, 53x, 54x, 58x, 64x, 65x, 66x, 67x, 68x, 69x, 6Ax, 6Bx, 6Hx, 6Jx, 6Kx, 6Yx, 6Zx, 72x, 73x, 75x, 76x • 4404-CTO, 32x, 33x, 34x, 35x, 3Gx, 3Hx, 3Jx, 3Kx, 3Lx, 3Mx, 3Nx, 3Px, 3Qx, 3Rx, 3Sx, 3Tx, 3Ux, 3Vx, 3Wx, 4Lx	45M2856	N
8	LCD module, 14.0-inch HD glossy • 2842-all • 2874-all	42T0670	N
8	LCD module, 14.0-inch HD glossy • 2842-all • 2874-all	42T0658	N
8	LCD module, 14.0-inch HD glossy • 2842-all • 2874-all	42T0684	N
8	LCD module, 14.0-inch HD glossy • 2842-all • 2874-all	42T0648	N
8	LCD module, 14.0-inch HD glossy • 2842-all • 2874-all	27R2433	N

Table 41. Parts list—14.0-inch HD LCD (continued)

No.	FRU (14.0-inch HD LCD)	FRU no.	CRU ID
8	LCD module, 14.0-inch HD glossy • 2842-all • 2874-all	27R2463	N
8	LCD module, 14.0-inch HD glossy • 2842-all • 2874-all	93P5499	N
8	LCD module, 14.0-inch HD glossy • 2842-all • 2874-all	93P5647	N
8	LCD module, 14.0-inch HD glossy • 2842-all • 2874-all	27R2497	N
8	LCD module, 14.0-inch HD glossy • 2842-all • 2874-all	93P5707	N
8	LCD module, 14.0-inch HD anti-glair • 2931-all • 0616-all • 0530-CTO, 22x, 32x, 53x, 55x, 57x, 59x, 5Ax, 5Bx, 5Cx, 5Dx, 5Ex, 5Fx, 5Gx, 5Jx, 5Kx, 5Lx, 5Mx, 5Nx, 5Px, 5Qx, 5Rx, 5Sx, 5Tx, 5Ux, 5Vx, 5Wx, 5Xx, 5Zx, 68x, 69x, 6Ax, 6Bx, 6Cx, 6Dx, 6Hx, 6Jx, 6Kx, 6Lx, 6Nx • 0553-CTO, 22x, 33x, 52x, 53x, 5Ax, 5Bx, 5Dx, 5Ex, 5Gx, 5Hx, 5Jx, 5Kx, 5Mx, 5Nx, 5Rx, 5Tx, 5Ux, 5Vx, 5Wx, 5Xx, 5Yx, 5Zx, 62x, 63x, 64x, 65x, 66x, 67x, 68x, 69x, 6Bx, 6Cx, 6Dx, 6Fx, 6Gx, 6Kx, 6Lx, 6Px, 6Qx, 6Ux, 6Vx, 78x, 7Bx, 7Cx, 7Dx, 7Ex, 7Gx, 7Hx, 7Lx, 7Mx, 7Nx, 7Px, 7Qx, 7Vx, 7Wx, 7Xx, 85x, 86x, 89x, 8Dx, R2x • 0585-CTO, 52x, 53x, 57x, 58x, 59x, 5Ax, 5Bx, 5Dx, 5Fx, 5Hx, 5Kx, 5Mx, 5Px, 5Rx, 5Tx, 5Vx, 5Yx, 6Jx, 6Kx, 6Lx, 6Mx, 6Nx, 6Rx, 6Sx, 6Tx, 6Ux • 0591-CTO • 4403-CTO, 35x, 36x, 3Ax, 3Bx, 3Cx, 3Dx, 3Ex, 3Fx, 3Gx, 3Hx, 3Jx, 3Kx, 3Lx, 3Mx, 3Nx, 3Px, 3Qx, 3Rx, 3Sx, 3Tx, 3Ux, 3Vx, 3Wx, 3Xx, 3Yx, 3Zx, 42x, 43x, 44x, 45x, 46x, 47x, 48x, 49x, 4Ax, 4Bx, 4Cx, 4Dx, 4Ex, 4Fx, 4Gx, 4Hx, 4Jx, 4Nx, 4Px, 4Rx, 4Sx, 4Tx, 4Ux, 4Vx, 4Wx, 4Xx, 4Yx, 4Zx, 52x, 55x, 56x, 57x, 59x, 5Ax, 5Bx, 5Cx, 5Dx, 5Ex, 5Fx, 5Gx, 5Hx, 5Jx, 5Kx, 5Lx, 5Mx, 5Nx, 5Px, 5Qx, 5Rx, 5Sx, 5Tx, 5Ux, 5Vx, 5Wx, 5Xx, 5Yx, 5Zx, 62x, 63x, 6Cx, 6Dx, 6Ex, 6Fx, 6Gx, 6Lx, 6Mx, 6Nx, 6Px, 6Qx, 6Rx, 6Sx, 6Tx, 6Ux, 6Vx, 6Wx, 6Xx, 74x, 77x • 4404-CTO, 36x, 37x, 38x, 39x, 3Ax, 3Bx, 3Cx, 3Dx, 3Ex, 3Fx, 3Xx, 3Yx, 3Zx, 42x, 43x, 44x, 45x, 46x, 47x, 48x, 49x, 4Ax, 4Bx, 4Cx, 4Dx, 4Ex, 4Fx, 4Gx, 4Hx, 4Jx, 4Kx, 4Mx, 4Nx, 4Px, 4Qx, 4Rx, 4Sx, 4Tx, 4Ux, 4Vx, 4Wx, 4Xx, 4Yx, 4Zx	42T0668	N
8	LCD module, 14.0-inch HD anti-glair • 2931-all • 0616-all	42T0656	N
8	LCD module, 14.0-inch HD anti-glair • 2931-all • 0616-all	42T0682	N

Table 41. Parts list—14.0-inch HD LCD (continued)

No.	FRU (14.0-inch HD LCD)	FRU no.	CRU ID
8	LCD module, 14.0-inch HD anti-glair • 2931-all • 0616-all • 0530-CTO, 22x, 32x, 53x, 55x, 57x, 59x, 5Ax, 5Bx, 5Cx, 5Dx, 5Ex, 5Fx, 5Gx, 5Jx, 5Kx, 5Lx, 5Mx, 5Nx, 5Px, 5Qx, 5Rx, 5Sx, 5Tx, 5Ux, 5Vx, 5Wx, 5Xx, 5Zx, 68x, 69x, 6Ax, 6Bx, 6Cx, 6Dx, 6Hx, 6Jx, 6Kx, 6Lx, 6Nx • 0553-CTO, 22x, 33x, 52x, 53x, 5Ax, 5Bx, 5Dx, 5Ex, 5Gx, 5Hx, 5Jx, 5Kx, 5Mx, 5Nx, 5Rx, 5Tx, 5Ux, 5Vx, 5Wx, 5Xx, 5Yx, 5Zx, 62x, 63x, 64x, 65x, 66x, 67x, 68x, 69x, 6Bx, 6Cx, 6Dx, 6Fx, 6Gx, 6Kx, 6Lx, 6Px, 6Qx, 6Ux, 6Vx, 78x, 7Bx, 7Cx, 7Dx, 7Ex, 7Gx, 7Hx, 7Lx, 7Mx, 7Nx, 7Px, 7Qx, 7Vx, 7Wx, 7Xx, 85x, 86x, 89x, 8Dx, R2x • 0585-CTO, 52x, 53x, 57x, 58x, 59x, 5Ax, 5Bx, 5Dx, 5Fx, 5Hx, 5Kx, 5Mx, 5Px, 5Rx, 5Tx, 5Vx, 5Yx, 6Jx, 6Kx, 6Lx, 6Mx, 6Nx, 6Rx, 6Sx, 6Tx, 6Ux • 0591-CTO • 4403-CTO, 35x, 36x, 3Ax, 3Bx, 3Cx, 3Dx, 3Ex, 3Fx, 3Gx, 3Hx, 3Jx, 3Kx, 3Lx, 3Mx, 3Nx, 3Px, 3Qx, 3Rx, 3Sx, 3Tx, 3Ux, 3Vx, 3Wx, 3Xx, 3Yx, 3Zx, 42x, 43x, 44x, 45x, 46x, 47x, 48x, 49x, 4Ax, 4Bx, 4Cx, 4Dx, 4Ex, 4Fx, 4Gx, 4Hx, 4Jx, 4Nx, 4Px, 4Rx, 4Sx, 4Tx, 4Ux, 4Vx, 4Wx, 4Xx, 4Yx, 4Zx, 52x, 55x, 56x, 57x, 59x, 5Ax, 5Bx, 5Cx, 5Dx, 5Ex, 5Fx, 5Gx, 5Hx, 5Jx, 5Kx, 5Lx, 5Mx, 5Nx, 5Px, 5Qx, 5Rx, 5Sx, 5Tx, 5Ux, 5Vx, 5Wx, 5Xx, 5Yx, 5Zx, 62x, 63x, 6Cx, 6Dx, 6Ex, 6Fx, 6Gx, 6Lx, 6Mx, 6Nx, 6Px, 6Qx, 6Rx, 6Sx, 6Tx, 6Ux, 6Vx, 6Wx, 6Xx, 74x, 77x • 4404-CTO, 36x, 37x, 38x, 39x, 3Ax, 3Bx, 3Cx, 3Dx, 3Ex, 3Fx, 3Xx, 3Yx, 3Zx, 42x, 43x, 44x, 45x, 46x, 47x, 48x, 49x, 4Ax, 4Bx, 4Cx, 4Dx, 4Ex, 4Fx, 4Gx, 4Hx, 4Jx, 4Kx, 4Mx, 4Nx, 4Px, 4Qx, 4Rx, 4Sx, 4Tx, 4Ux, 4Vx, 4Wx, 4Xx, 4Yx, 4Zx	42T0646	N
8	LCD module, 14.0-inch HD anti-glair • 2931-all • 0616-all • 0530-all • 0553-all • 0585-all • 0591-all • 4403-all • 4404-all	27R2431	N
8	LCD module, 14.0-inch HD anti-glair • 2931-all • 0616-all • 0530-all • 0553-all • 0585-all • 0591-all • 4403-all • 4404-all	27R2465	N
8	LCD module, 14.0-inch HD anti-glair • 2931-all • 0616-all • 0530-all • 0553-all • 0585-all • 0591-all • 4403-all • 4404-all	93P5497	N

Table 41. Parts list—14.0-inch HD LCD (continued)

No.	FRU (14.0-inch HD LCD)	FRU no.	CRU ID
8	LCD module, 14.0-inch HD anti-glair • 2931-all • 0616-all • 0530-all • 0553-all • 0585-all • 0591-all • 4403-all • 4404-all	93P5649	N
8	LCD module, 14.0-inch HD anti-glair • 2931-all • 0616-all • 0530-all • 0553-all • 0585-all • 0591-all • 4403-all • 4404-all	93P5705	N
9	Wireless LAN antenna set 14W	45M2851	N

Table 42. Parts list—15.6-inch HD LCD

No.	FRU (15.6-inch HD LCD)	FRU no.	CRU ID
1	LCD front bezel for 15W	75Y4788	N
2	Integrated camera with microphone (0.3M) • 2847-CTO, 22x, 2Zx, 44x, 4Hx, 5Cx, 5Dx, 6Nx, 6Px, 6Qx, 6Rx, 6Sx, 6Tx, 7Kx, 7Lx, 7Mx, 7Nx, 7Px, 7Qx, 7Rx, 7Sx, 7Ux, 84x, 85x, 86x, 87x, 88x, A9x, ANx, APx, AVx, B4x, B5x, B6x, B7x, BBx, C3x, C4x, C5x, C6x, C7x, CAx, CBx, CGx, CHx, CJx, CKx, CRx, CSx, CUx, CVx, CWx, CXx, CYx, CZx, D2x, D3x, D4x, D5x, D6x, D7x, D8x, D9x, DAx, DBx, DCx, DDx, DEx, DFx, DGx, DHx, DJx, DKx, DLx • 2873-CTO • 2875-CTO, 23x, 24x, 29x, 2Ax, 2Gx, 2Hx, 2Jx, 2Nx, 2Px, 2Qx, 2Rx, 2Sx, 2Tx, 2Yx, 3Zx, 42x, 44x, 45x, 46x, 4Jx, 4Kx, 4Vx, 4Wx, 4Xx, 58x, 59x, 5Ax, 5Bx, 5Fx, 5Gx, 5Hx, 5Jx, 5Kx, 5Lx, 5Mx, 5Nx • 5072-CTO	60Y3325	N

Table 42. Parts list—15.6-inch HD LCD (continued)

No.	FRU (15.6-inch HD LCD)	FRU no.	CRU ID
2	Integrated camera with microphone (2.0M) • 2847-CTO, 23x, 24x, 25x, 26x, 27x, 28x, 29x, 2Ax, 2Bx, 2Cx, 2Dx, 2Ex, 2Fx, 2Gx, 2Hx, 2Lx, 2Mx, 2Nx, 2Px, 2Qx, 2Rx, 2Sx, 2Tx, 2Ux, 2Vx, 2Wx, 2Xx, 2Yx, 34x, 35x, 36x, 37x, 38x, 39x, 3Dx, 3Ex, 3Kx, 3Mx, 3Nx, 3Px, 3Qx, 3Zx, 42x, 43x, 45x, 46x, 47x, 48x, 49x, 4Ax, 4Bx, 4Cx, 4Dx, 4Ex, 4Fx, 4Gx, 4Nx, 4Px, 4Qx, 4Rx, 4Tx, 4Ux, 4Vx, 4Wx, 54x, 55x, 56x, 57x, 58x, 59x, 5Ax, 5Bx, 5Ex, 5Fx, 5Gx, 5Hx, 5Jx, 5Kx, 5Lx, 5Mx, 5Nx, 5Px, 5Qx, 5Rx, 5Sx, 5Tx, 5Ux, 5Vx, 5Wx, 5Xx, 5Yx, 5Zx, 62x, 63x, 64x, 65x, 66x, 67x, 68x, 69x, 6Ax, 6Bx, 6Cx, 6Dx, 6Ex, 6Fx, 6Gx, 6Hx, 6Jx, 6Kx, 6Lx, 6Mx, 6Ux, 6Vx, 6Wx, 6Xx, 6Yx, 6Zx, 72x, 73x, 74x, 75x, 76x, 77x, 78x, 79x, 7Ax, 7Bx, 7Cx, 7Dx, 7Ex, 7Jx, 7Wx, 7Xx, 7Yx, 7Zx, 82x, 83x, 89x, 8Ax, 8Bx, 8Cx, 8Dx, 8Ex, 8Fx, 8Gx, 8Hx, 8Jx, 8Kx, 8Lx, 8Mx, 8Nx, 8Px, 8Qx, 8Rx, 8Sx, 8Tx, 8Ux, 8Vx, 8Wx, 8Xx, 8Yx, 8Zx, 92x, 93x, 94x, 95x, 96x, 97x, 98x, 99x, 9Ax, 9Bx, 9Cx, 9Dx, 9Ex, 9Gx, 9Hx, 9Jx, 9Kx, 9Lx, 9Nx, 9Px, 9Qx, 9Rx, 9Sx, 9Tx, 9Ux, 9Vx, 9Wx, 9Xx, 9Yx, 9Zx, A2x, A3x, A4x, A5x, A6x, A7x, A8x, AAx, ABx, ACx, ADx, AEx, AFx, AGx, AHx, AJx, AKx, ALx, AMx, AQx, ARx, ASx, ATx, AUx, AWx, AXx, AYx, AZx, B2x, B3x, B8x, B9x, BAx, BCx, BDx, BEx, BFx, BGx, BHx, BJx, BKx, BMx, BNx, BPx, BRx, BSx, BTx, BUx, BVx, BWx, BXx, BYx, BZx, C2x, C8x, C9x, CCx, CDx, CEx, CFx, CLx, CMx, CNx, CPx, CQx, Q2x, Q3x, Q4x, Q5x, Q6x, Q7x, Q8x, Q9x, QAx, QBx, QCx, QDx, QEx, QFx, QHx, QJx, R2x, R3x, R4x, R5x, R6x, R7x, R8x, R9x, RAx, RBx, RMx, RNx, RPx, RQx, RRx, RSx, RTx, RUx, RVx, RWx, RXx • 2873-CTO, 22x, 32x, 33x • 2875-CTO, 25x, 26x, 27x, 28x, 2Bx, 2Cx, 2Dx, 2Ex, 2Fx, 2Kx, 2Lx, 2Mx, 2Zx, 36x, 39x, 3Ax, 3Mx, 3Px, 3Wx, 3Xx, 4Cx, 4Ux, 4Yx, 5Cx, R2x, R3x, R4x, R5x, R6x, RCx, RDx, RFx • 2550-CTO, 43x, 44x, 53x, 54x, 55x, 5Bx, 5Dx, 5Fx, 5Hx, 5Kx, 5Mx, 5Px, 5Rx, 5Tx, 5Vx, 5Zx, 62x, 63x, 64x, 65x, 66x, 67x, 68x, 69x, 6Ax, 6Nx, 6Sx, 6Tx, 6Ux • 2597-CTO, 22x, 32x, 52x, 53x, 54x, 55x, 56x, 58x, 59x, 5Ax, 5Bx, 5Cx, 5Dx, 5Fx, 5Gx, 5Hx, 5Jx, 5Kx, 5Lx, 5Mx, 5Nx, 5Px, 5Qx, 5Tx, 5Vx, 5Wx, 5Xx, 5Yx, 5Zx, 62x, 63x, 64x, 65x, 66x, 67x, 68x, 69x, 6Ax, 6Bx, 6Cx, 6Dx, 6Ex, 6Fx, 6Gx, 6Hx, 6Jx, 6Kx, 6Lx, 6Mx, 6Nx, 6Px, 6Qx • 2598-CTO, 22x, 24x, 25x, 33x, 34x, 35x, 43x, 44x, 52x, 53x, 54x, 55x, 5Ax, 5Bx, 5Dx, 5Ex, 5Fx, 5Gx, 5Hx, 5Jx, 5Kx, 5Lx, 5Mx, 5Nx, 5Px, 5Qx, 5Rx, 5Sx, 5Tx, 62x, 63x, 64x, 65x, 66x, 67x, 68x, 69x, 6Ax, 6Bx, 6Cx, 6Dx, 6Ex, 6Fx, 6Gx, 6Nx, 6Px, 6Qx, 6Rx, 6Sx, 6Tx, 6Ux, 6Vx, 6Wx, 6Xx, 6Yx, 6Zx, 72x, 74x, 75x, 76x, 78x, 79x, 7Ax, 7Cx, 7Dx, 7Ex, 7Fx, 7Gx, 7Hx, 7Jx, 7Kx, 7Qx, 7Rx, 7Sx, 7Tx, 7Ux, 7Vx, 7Wx, 7Xx, 7Yx, 7Zx, 82x, 83x, 84x, 85x • 2599-CTO, 52x, 53x • 4444-CTO, 32x, 33x, 34x, 36x, 37x, 38x, 39x, 3Ax, 3Bx, 3Cx, 3Dx, 3Ex, 3Gx, 3Hx, 3Jx, 3Kx, 3Lx, 3Mx, 3Nx, 3Px, 3Qx, 3Rx, 3Sx, 3Tx, 3Ux, 3Vx, 3Wx, 3Yx, 3Zx, 42x, 43x, 44x, 45x, 46x, 47x, 48x, 49x, 4Ax, 4Bx, 4Cx, 4Dx, 4Ex, 4Fx, 4Gx, 4Hx, 4Jx, 4Kx, 4Lx, 4Mx, 4Nx, 4Px, 4Qx, 4Vx, 4Wx, 4Xx, 4Yx, 4Zx, 52x, 53x, 54x, 55x, 56x, 57x, 58x, 5Bx, 5Cx, 5Dx, 5Ex • 4447-CTO, 32x, 33x, 34x, 35x, 36x, 37x, 38x, 39x, 3Ax, 3Bx, 3Cx, 3Dx, 3Ex, 3Fx, 3Gx, 3Hx	60Y3327	N

Table 42. Parts list—15.6-inch HD LCD (continued)

No.	FRU (15.6-inch HD LCD)	FRU no.	CRU ID
2	Microphone • 2847-CTO, 2Jx, 2Kx, 33x, 3Lx, 3Vx, 3Wx, 3Xx, 3Yx, 4Jx, 4Sx, 4Xx, 4Yx, 4Zx, 52x, 53x, 7Fx, 7Tx, 7Vx, 9Fx, 9Mx, BQx, QGx, RCx, RDx, RFx, RGx, RHx, RJx, RKx, RLx • 2873-CTO • 2875-CTO, 22x, 2Ux, 2Vx, 2Wx, 2Xx, 32x, 33x, 35x, 3Nx, 3Yx, 43x, 47x, 48x, 49x, 4Ax, 4Bx, 4Dx, 4Ex, 4Fx, 4Gx, 4Hx, 4Lx, 4Nx, 4Px, 4Qx, 4Rx, 4Sx, 4Tx, 52x, 53x, 54x, 55x, 56x, 57x, 5Dx, 5Ex, 5Px, 5Qx, 5Rx, 5Sx, R7x, R8x, R9x, RAx, RBx, RGx, RHx, RJx • 5072-CTO • 2550-CTO, 42x, 52x, 57x, 58x, 59x, 5Ax, 5Xx, 5Yx • 2597-CTO, 5Ex, 5Rx, 5Sx • 2598-CTO, 42x, 56x, 57x, 58x, 59x, 5Cx, 5Vx, 5Wx, 5Xx, 5Yx, 5Zx, 6Jx, 6Kx, 6Lx, 73x, 77x, 7Bx, R2x, R3x • 2599-CTO • 4444-CTO, 35x, 3Fx, 4Rx, 4Sx, 4Tx, 4Ux, 59x, 5Ax • 4447-CTO, 7Lx, 7Mx, 7Nx, 7Px	60Y3329	N
3	Wireless WAN antenna set 15W • 2847-CTO, 22x, 23x, 2Nx, 3Ex, 3Px, 43x, 55x, 57x, 59x, 5Bx, 69x, 6Bx, 6Dx, 6Fx, 6Hx, 6Kx, 85x, 88x, 94x, 96x, 98x, 9Zx, BDx, BFx, BHx, BKx, Q4x, Q6x, Q8x, QAx, QCx • 2873-CTO, 22x • 2550-CTO, 42x, 43x, 44x, 5Zx, 62x, 6Nx, 6Sx, 6Tx, 6Ux • 2597-CTO, 53x, 55x, 5Xx, 5Yx, 5Zx, 62x, 63x, 64x, 66x, 67x, 68x, 69x, 6Nx, 6Px, 6Qx • 2598-CTO, 24x, 25x, 34x, 35x, 42x, 43x, 44x, 52x, 53x, 54x, 55x, 5Ax, 5Bx, 5Cx, 5Ex, 5Gx, 5Jx, 5Lx, 5Nx, 5Qx, 5Sx, 65x, 66x, 6Lx, 6Nx, 6Qx, 6Rx, 6Sx, 6Tx, 6Ux, 6Vx, 6Wx, 6Xx, 6Yx, 72x, 75x, 77x, 78x, 79x, 7Ax, 7Bx, 7Cx, 7Dx, 7Ex, 7Fx, 7Qx, 7Rx, 7Sx, 7Tx, 7Ux, 7Xx, 7Yx, 7Zx, 83x, 85x, R3x • 2599-CTO, 52x, 53x • 4444-CTO, 32x, 33x, 34x, 36x, 37x, 38x, 3Mx, 3Nx, 3Px, 3Qx, 3Rx, 3Sx, 3Tx, 3Ux, 4Bx, 4Cx, 4Dx, 4Ex, 4Fx, 4Gx, 4Hx, 4Jx, 4Nx, 4Px, 4Qx, 4Vx, 4Wx, 4Xx, 53x, 54x, 55x, 56x, 57x, 58x, 5Bx, 5Cx, 5Dx, 5Ex • 4447-CTO, 32x, 33x, 3Ex, 3Fx, 3Gx, 3Hx	45M2854	N
4	Hinges 15W	60Y4349	N
4	Hinges 15W	60Y4350	N

Table 42. Parts list—15.6-inch HD LCD (continued)

No.	FRU (15.6-inch HD LCD)	FRU no.	CRU ID
5	LCD cover kit Paint 15W (with logo) • 2847-CTO, 22x, 23x, 24x, 25x, 26x, 27x, 28x, 29x, 2Ax, 2Bx, 2Cx, 2Dx, 2Ex, 2Fx, 2Gx, 2Hx, 2Jx, 2Kx, 2Lx, 2Mx, 2Nx, 2Px, 2Qx, 2Rx, 2Sx, 2Tx, 2Ux, 2Vx, 2Wx, 2Xx, 2Yx, 2Zx, 33x, 34x, 35x, 36x, 37x, 38x, 39x, 3Dx, 3Ex, 3Kx, 3Lx, 3Mx, 3Nx, 3Px, 3Qx, 3Vx, 3Wx, 3Xx, 3Yx, 3Zx, 42x, 43x, 44x, 45x, 46x, 47x, 48x, 49x, 4Ax, 4Bx, 4Cx, 4Dx, 4Ex, 4Fx, 4Gx, 4Hx, 4Jx, 4Nx, 4Px, 4Qx, 4Rx, 4Sx, 4Tx, 4Ux, 4Vx, 4Wx, 4Xx, 4Yx, 4Zx, 52x, 53x, 54x, 55x, 56x, 57x, 58x, 59x, 5Ax, 5Bx, 5Cx, 5Dx, 5Ex, 5Fx, 5Gx, 5Hx, 5Jx, 5Kx, 5Lx, 5Mx, 5Nx, 5Px, 5Qx, 5Rx, 5Sx, 5Tx, 5Ux, 5Vx, 5Wx, 5Xx, 5Yx, 5Zx, 62x, 63x, 64x, 65x, 66x, 67x, 68x, 69x, 6Ax, 6Bx, 6Cx, 6Dx, 6Ex, 6Fx, 6Gx, 6Hx, 6Jx, 6Kx, 6Lx, 6Mx, 6Nx, 6Px, 6Qx, 6Rx, 6Sx, 6Tx, 6Ux, 6Vx, 6Wx, 6Xx, 6Yx, 6Zx, 72x, 73x, 74x, 75x, 76x, 77x, 78x, 79x, 7Ax, 7Bx, 7Cx, 7Dx, 7Ex, 7Fx, 7Jx, 7Kx, 7Lx, 7Mx, 7Nx, 7Px, 7Qx, 7Rx, 7Sx, 7Tx, 7Ux, 7Vx, 7Wx, 7Xx, 7Yx, 7Zx, 82x, 83x, 84x, 85x, 86x, 87x, 88x, 89x, 8Ax, 8Bx, 8Cx, 8Dx, 8Ex, 8Fx, 8Gx, 8Hx, 8Jx, 8Kx, 8Lx, 8Mx, 8Nx, 8Px, 8Qx, 8Rx, 8Sx, 8Tx, 8Ux, 8Vx, 8Wx, 8Xx, 8Yx, 8Zx, 92x, 93x, 94x, 95x, 96x, 97x, 98x, 99x, 9Ax, 9Bx, 9Cx, 9Dx, 9Ex, 9Fx, 9Gx, 9Hx, 9Jx, 9Kx, 9Lx, 9Mx, 9Nx, 9Px, 9Qx, 9Rx, 9Sx, 9Tx, 9Ux, 9Vx, 9Wx, 9Xx, 9Yx, 9Zx, A2x, A3x, A4x, A5x, A6x, A7x, A8x, A9x, AAx, ABx, ACx, ADx, AEx, AFx, AGx, AHx, AJx, AKx, ALx, AMx, ANx, APx, AQx, ARx, ASx, ATx, AUx, AVx, AWx, AXx, AYx, AZx, B2x, B3x, B4x, B5x, B6x, B7x, B8x, B9x, BAx, BBx, BCx, BDx, BEx, BFx, BGx, BHx, BJx, BKx, BMx, BNx, BPx, BQx, BRx, BSx, BTx, BUx, BVx, BWx, BXx, BYx, BZx, C2x, C3x, C4x, C5x, C6x, C7x, C8x, C9x, CAx, CBx, CCx, CDx, CEx, CFx, CGx, CHx, CJx, CKx, CLx, CMx, CNx, CPx, CQx, Q2x, Q3x, Q4x, Q5x, Q6x, Q7x, Q8x, Q9x, QAx, QBx, QCx, QDx, QEx, QFx, QGx, QHx, QJx, R2x, R3x, R4x, R5x, R6x, R7x, R8x, R9x, RAx, RBx, RCx, RDx, RFx, RGx, RHx, RJx, RKx, RLx, RMx, RNx, RPx, RQx, RRx, RSx, RTx, RUx, RVx, RWx, RXx • 2873-CTO, 22x, 32x, 33x • 2875-all • 2550-all • 2597-all • 2598-all • 2599-all • 4444-all • 4447-all	75Y4786	N
5	LCD cover kit Texture 15W (with logo) • 2847-CTO, CRx, CSx, CUx, CVx, CWx, CXx, CYx, CZx, D2x, D3x, D4x, D5x, D6x, D7x, D8x, D9x, DAx, DBx, DCx, DDx, DEx, DFx, DGx, DHx, DJx, DKx, DLx • 2873-CTO • 5072-all	04W0374	N
6	Speaker assembly	60Y3334	N

Table 42. Parts list—15.6-inch HD LCD (continued)

No.	FRU (15.6-inch HD LCD)	FRU no.	CRU ID
7	LCD cable, HD, Teflon 15W • 2847-CTO, 24x, 25x, 26x, 27x, 28x, 29x, 2Ax, 2Bx, 2Cx, 2Dx, 2Ex, 2Fx, 2Gx, 2Hx, 2Jx, 2Kx, 2Lx, 2Mx, 2Px, 2Qx, 2Rx, 2Sx, 2Tx, 2Ux, 2Vx, 2Wx, 2Xx, 2Yx, 2Zx, 33x, 34x, 35x, 36x, 37x, 38x, 39x, 3Dx, 3Kx, 3Lx, 3Mx, 3Nx, 3Qx, 3Vx, 3Wx, 3Xx, 3Yx, 3Zx, 42x, 44x, 45x, 46x, 47x, 48x, 49x, 4Ax, 4Bx, 4Cx, 4Dx, 4Ex, 4Fx, 4Gx, 4Hx, 4Jx, 4Nx, 4Px, 4Qx, 4Rx, 4Sx, 4Tx, 4Ux, 4Vx, 4Wx, 4Xx, 4Yx, 4Zx, 52x, 53x, 54x, 56x, 58x, 5Ax, 5Cx, 5Dx, 5Ex, 5Fx, 5Gx, 5Hx, 5Jx, 5Kx, 5Lx, 5Mx, 5Nx, 5Px, 5Qx, 5Rx, 5Sx, 5Tx, 5Ux, 5Vx, 5Wx, 5Xx, 5Yx, 5Zx, 62x, 63x, 64x, 65x, 66x, 67x, 68x, 6Ax, 6Cx, 6Ex, 6Gx, 6Jx, 6Lx, 6Mx, 6Nx, 6Px, 6Qx, 6Rx, 6Sx, 6Tx, 6Ux, 6Vx, 6Wx, 6Xx, 6Yx, 6Zx, 72x, 73x, 74x, 75x, 76x, 77x, 78x, 79x, 7Ax, 7Bx, 7Cx, 7Dx, 7Ex, 7Fx, 7Jx, 7Kx, 7Lx, 7Mx, 7Nx, 7Px, 7Qx, 7Rx, 7Sx, 7Tx, 7Ux, 7Vx, 7Wx, 7Xx, 7Yx, 7Zx, 82x, 83x, 84x, 86x, 87x, 89x, 8Ax, 8Bx, 8Cx, 8Dx, 8Ex, 8Fx, 8Gx, 8Hx, 8Jx, 8Kx, 8Lx, 8Mx, 8Nx, 8Px, 8Qx, 8Rx, 8Sx, 8Tx, 8Ux, 8Vx, 8Wx, 8Xx, 8Yx, 8Zx, 92x, 93x, 95x, 97x, 99x, 9Ax, 9Bx, 9Cx, 9Dx, 9Ex, 9Fx, 9Gx, 9Hx, 9Jx, 9Kx, 9Lx, 9Mx, 9Nx, 9Px, 9Qx, 9Rx, 9Sx, 9Tx, 9Ux, 9Vx, 9Wx, 9Xx, 9Yx, A2x, A3x, A4x, A5x, A6x, A7x, A8x, A9x, AAx, ABx, ACx, ADx, AEx, AFx, AGx, AHx, AJx, AKx, ALx, AMx, ANx, APx, AQx, ARx, ASx, ATx, AUx, AVx, AWx, AXx, AYx, AZx, B2x, B3x, B4x, B5x, B6x, B7x, B8x, B9x, BAx, BBx, BCx, BEx, BGx, BJx, BMx, BNx, BPx, BQx, BRx, BSx, BTx, BUx, BVx, BWx, BXx, BYx, BZx, C2x, C3x, C4x, C5x, C6x, C7x, C8x, C9x, CAx, CBx, CCx, CDx, CEx, CFx, CGx, CHx, CJx, CKx, CLx, CMx, CNx, CPx, CQx, CRx, CSx, CUx, CVx, CWx, CXx, CYx, CZx, D2x, D3x, D4x, D5x, D6x, D7x, D8x, D9x, DAx, DBx, DCx, DDx, DEx, DFx, DGx, DHx, DJx, DKx, DLx, Q2x, Q3x, Q5x, Q7x, Q9x, QBx, QDx, QEx, QFx, QGx, QHx, QJx, R2x, R3x, R4x, R5x, R6x, R7x, R8x, R9x, RAx, RBx, RCx, RDx, RFx, RGx, RHx, RJx, RKx, RLx, RMx, RNx, RPx, RQx, RRx, RSx, RTx, RUx, RVx, RWx, RXx • 2873-CTO, 32x, 33x • 2875-all • 5072-all • 2550-CTO, 52x, 53x, 54x, 55x, 57x, 58x, 59x, 5Ax, 5Bx, 5Dx, 5Fx, 5Hx, 5Kx, 5Mx, 5Px, 5Rx, 5Tx, 5Vx, 5Xx, 5Yx, 63x, 64x, 65x, 66x, 67x, 68x, 69x, 6Ax • 2597-CTO, 22x, 32x, 52x, 54x, 56x, 58x, 59x, 5Ax, 5Bx, 5Cx, 5Dx, 5Ex, 5Fx, 5Gx, 5Hx, 5Jx, 5Kx, 5Lx, 5Mx, 5Nx, 5Px, 5Qx, 5Rx, 5Sx, 5Tx, 5Vx, 5Wx, 65x, 6Ax, 6Bx, 6Cx, 6Dx, 6Ex, 6Fx, 6Gx, 6Hx, 6Jx, 6Kx, 6Lx, 6Mx • 2598-CTO, 22x, 33x, 56x, 57x, 58x, 59x, 5Dx, 5Fx, 5Hx, 5Kx, 5Mx, 5Px, 5Rx, 5Tx, 5Vx, 5Wx, 5Xx, 5Yx, 5Zx, 62x, 63x, 64x, 67x, 68x, 69x, 6Ax, 6Bx, 6Cx, 6Dx, 6Ex, 6Fx, 6Gx, 6Jx, 6Kx, 6Px, 6Zx, 73x, 74x, 76x, 7Gx, 7Hx, 7Jx, 7Kx, 7Vx, 7Wx, 82x, 84x, R2x • 2599-CTO • 4444-CTO, 35x, 39x, 3Ax, 3Bx, 3Cx, 3Dx, 3Ex, 3Fx, 3Gx, 3Hx, 3Jx, 3Kx, 3Lx, 3Vx, 3Wx, 3Yx, 3Zx, 42x, 43x, 44x, 45x, 46x, 47x, 48x, 49x, 4Ax, 4Kx, 4Lx, 4Mx, 4Rx, 4Sx, 4Tx, 4Ux, 4Yx, 4Zx, 52x, 59x, 5Ax • 4447-CTO, 34x, 35x, 36x, 37x, 38x, 39x, 3Ax, 3Bx, 3Cx, 3Dx, 7Lx, 7Mx, 7Nx, 7Px	75Y5628	N
7	LCD cable, HD, Coaxial 15W • 2847-CTO, 22x, 23x, 2Nx, 3Ex, 3Px, 43x, 55x, 57x, 59x, 5Bx, 69x, 6Bx, 6Dx, 6Fx, 6Hx, 6Kx, 85x, 88x, 94x, 96x, 98x, 9Zx, BDx, BFx, BHx, BKx, Q4x, Q6x, Q8x, QAx, QCx • 2873-CTO, 22x • 2550-CTO, 42x, 43x, 44x, 5Zx, 62x, 6Nx, 6Sx, 6Tx, 6Ux • 2597-CTO, 53x, 55x, 5Xx, 5Yx, 5Zx, 62x, 63x, 64x, 66x, 67x, 68x, 69x, 6Nx, 6Px, 6Qx • 2598-CTO, 24x, 25x, 34x, 35x, 42x, 43x, 44x, 52x, 53x, 54x, 55x, 5Ax, 5Bx, 5Cx, 5Ex, 5Gx, 5Jx, 5Lx, 5Nx, 5Qx, 5Sx, 65x, 66x, 6Lx, 6Nx, 6Qx, 6Rx, 6Sx, 6Tx, 6Ux, 6Vx, 6Wx, 6Xx, 6Yx, 72x, 75x, 77x, 78x, 79x, 7Ax, 7Bx, 7Cx, 7Dx, 7Ex, 7Fx, 7Qx, 7Rx, 7Sx, 7Tx, 7Ux, 7Xx, 7Yx, 7Zx, 83x, 85x, R3x • 2599-CTO, 52x, 53x • 4444-CTO, 32x, 33x, 34x, 36x, 37x, 38x, 3Mx, 3Nx, 3Px, 3Qx, 3Rx, 3Sx, 3Tx, 3Ux, 4Bx, 4Cx, 4Dx, 4Ex, 4Fx, 4Gx, 4Hx, 4Jx, 4Nx, 4Px, 4Qx, 4Vx, 4Wx, 4Xx, 53x, 54x, 55x, 56x, 57x, 58x, 5Bx, 5Cx, 5Dx, 5Ex • 4447-CTO, 32x, 33x, 3Ex, 3Fx, 3Gx, 3Hx	75Y5629	N

Table 42. Parts list—15.6-inch HD LCD (continued)

No.	FRU (15.6-inch HD LCD)	FRU no.	CRU ID
8	LCD module, 15.6-inch HD glossy • 2847-CTO, 22x, 23x, 33x, 34x, 35x, 36x, 37x, 38x, 39x, 3Dx, 3Ex, 3Kx, 3Lx, 3Mx, 3Nx, 3Px, 3Qx, 42x, 43x, 44x, 45x, 46x, 47x, 48x, 49x, 4Ax, 4Bx, 4Cx, 4Dx, 4Ex, 4Fx, 4Gx, 4Hx, 4Jx, 4Tx, 4Ux, 4Vx, 4Xx, 4Yx, 4Zx, 52x, 53x, 54x, 55x, 56x, 57x, 58x, 59x, 5Ax, 5Bx, 5Cx, 5Dx, 5Ex, 5Fx, 5Gx, 5Hx, 5Jx, 5Kx, 5Lx, 5Mx, 5Nx, 5Px, 5Qx, 5Rx, 5Sx, 5Tx, 5Ux, 5Vx, 5Wx, 5Xx, 5Yx, 5Zx, 62x, 63x, 64x, 65x, 66x, 67x, 6Jx, 6Kx, 6Lx, 6Rx, 6Sx, 6Tx, 6Ux, 6Vx, 6Wx, 6Xx, 6Yx, 6Zx, 73x, 74x, 75x, 76x, 77x, 78x, 79x, 7Ax, 7Bx, 7Cx, 7Dx, 7Ex, 7Fx, 7Jx, 7Wx, 7Xx, 7Yx, 82x, 83x, 84x, 85x, 86x, 87x, 88x, 89x, 8Ax, 8Bx, 8Cx, 8Dx, 8Ex, 8Fx, 8Hx, 8Kx, 8Nx, 8Qx, 8Sx, 8Ux, 8Wx, 92x, 93x, 94x, 95x, 96x, 97x, 98x, 99x, 9Ax, 9Bx, 9Ex, 9Jx, 9Kx, 9Lx, 9Mx, 9Nx, 9Px, 9Qx, 9Rx, 9Sx, 9Tx, 9Vx, A2x, A3x, A4x, A8x, ANx, APx, ARx, AUx, AVx, AYx, AZx, B2x, B3x, B4x, BBx, BCx, BDx, BGx, BHx, BJx, BKx, BRx, C8x, CAx, CBx, CCx, CDx, CEx, CFx, CLx, CMx, CNx, CUx, CVx, CWx, CXx, CYx, D4x, D5x, D6x, D7x, Q2x, Q3x, Q4x, Q5x, Q6x, Q7x, Q8x, Q9x, QAx, QBx, QCx, R2x, R3x, R4x, R5x, R6x, R7x, R8x, R9x, RAx, RBx, RCx, RDx, RFx, RGx, RHx, RJx, RKx, RLx, RMx, RNx, RPx, RQx, RRx, RSx, RTx, RUx, RVx, RWx, RXx • 2875-all	42T0652	N
8	LCD module, 15.6-inch HD glossy • 2847-CTO, 22x, 23x, 33x, 34x, 35x, 36x, 37x, 38x, 39x, 3Dx, 3Ex, 3Kx, 3Lx, 3Mx, 3Nx, 3Px, 3Qx, 42x, 43x, 44x, 45x, 46x, 47x, 48x, 49x, 4Ax, 4Bx, 4Cx, 4Dx, 4Ex, 4Fx, 4Gx, 4Hx, 4Jx, 4Tx, 4Ux, 4Vx, 4Xx, 4Yx, 4Zx, 52x, 53x, 54x, 55x, 56x, 57x, 58x, 59x, 5Ax, 5Bx, 5Cx, 5Dx, 5Ex, 5Fx, 5Gx, 5Hx, 5Jx, 5Kx, 5Lx, 5Mx, 5Nx, 5Px, 5Qx, 5Rx, 5Sx, 5Tx, 5Ux, 5Vx, 5Wx, 5Xx, 5Yx, 5Zx, 62x, 63x, 64x, 65x, 66x, 67x, 6Jx, 6Kx, 6Lx, 6Rx, 6Sx, 6Tx, 6Ux, 6Vx, 6Wx, 6Xx, 6Yx, 6Zx, 73x, 74x, 75x, 76x, 77x, 78x, 79x, 7Ax, 7Bx, 7Cx, 7Dx, 7Ex, 7Fx, 7Jx, 7Wx, 7Xx, 7Yx, 82x, 83x, 84x, 85x, 86x, 87x, 88x, 89x, 8Ax, 8Bx, 8Cx, 8Dx, 8Ex, 8Fx, 8Hx, 8Kx, 8Nx, 8Qx, 8Sx, 8Ux, 8Wx, 92x, 93x, 94x, 95x, 96x, 97x, 98x, 99x, 9Ax, 9Bx, 9Ex, 9Jx, 9Kx, 9Lx, 9Mx, 9Nx, 9Px, 9Qx, 9Rx, 9Sx, 9Tx, 9Vx, A2x, A3x, A4x, A8x, ANx, APx, ARx, AUx, AVx, AYx, AZx, B2x, B3x, B4x, BBx, BCx, BDx, BGx, BHx, BJx, BKx, BRx, C8x, CAx, CBx, CCx, CDx, CEx, CFx, CLx, CMx, CNx, CUx, CVx, CWx, CXx, CYx, D4x, D5x, D6x, D7x, Q2x, Q3x, Q4x, Q5x, Q6x, Q7x, Q8x, Q9x, QAx, QBx, QCx, R2x, R3x, R4x, R5x, R6x, R7x, R8x, R9x, RAx, RBx, RCx, RDx, RFx, RGx, RHx, RJx, RKx, RLx, RMx, RNx, RPx, RQx, RRx, RSx, RTx, RUx, RVx, RWx, RXx • 2875-all	42T0674	N
8	LCD module, 15.6-inch HD glossy • 2847-CTO, 22x, 23x, 33x, 34x, 35x, 36x, 37x, 38x, 39x, 3Dx, 3Ex, 3Kx, 3Lx, 3Mx, 3Nx, 3Px, 3Qx, 42x, 43x, 44x, 45x, 46x, 47x, 48x, 49x, 4Ax, 4Bx, 4Cx, 4Dx, 4Ex, 4Fx, 4Gx, 4Hx, 4Jx, 4Tx, 4Ux, 4Vx, 4Xx, 4Yx, 4Zx, 52x, 53x, 54x, 55x, 56x, 57x, 58x, 59x, 5Ax, 5Bx, 5Cx, 5Dx, 5Ex, 5Fx, 5Gx, 5Hx, 5Jx, 5Kx, 5Lx, 5Mx, 5Nx, 5Px, 5Qx, 5Rx, 5Sx, 5Tx, 5Ux, 5Vx, 5Wx, 5Xx, 5Yx, 5Zx, 62x, 63x, 64x, 65x, 66x, 67x, 6Jx, 6Kx, 6Lx, 6Rx, 6Sx, 6Tx, 6Ux, 6Vx, 6Wx, 6Xx, 6Yx, 6Zx, 73x, 74x, 75x, 76x, 77x, 78x, 79x, 7Ax, 7Bx, 7Cx, 7Dx, 7Ex, 7Fx, 7Jx, 7Wx, 7Xx, 7Yx, 82x, 83x, 84x, 85x, 86x, 87x, 88x, 89x, 8Ax, 8Bx, 8Cx, 8Dx, 8Ex, 8Fx, 8Hx, 8Kx, 8Nx, 8Qx, 8Sx, 8Ux, 8Wx, 92x, 93x, 94x, 95x, 96x, 97x, 98x, 99x, 9Ax, 9Bx, 9Ex, 9Jx, 9Kx, 9Lx, 9Mx, 9Nx, 9Px, 9Qx, 9Rx, 9Sx, 9Tx, 9Vx, A2x, A3x, A4x, A8x, ANx, APx, ARx, AUx, AVx, AYx, AZx, B2x, B3x, B4x, BBx, BCx, BDx, BGx, BHx, BJx, BKx, BRx, C8x, CAx, CBx, CCx, CDx, CEx, CFx, CLx, CMx, CNx, CUx, CVx, CWx, CXx, CYx, D4x, D5x, D6x, D7x, Q2x, Q3x, Q4x, Q5x, Q6x, Q7x, Q8x, Q9x, QAx, QBx, QCx, R2x, R3x, R4x, R5x, R6x, R7x, R8x, R9x, RAx, RBx, RCx, RDx, RFx, RGx, RHx, RJx, RKx, RLx, RMx, RNx, RPx, RQx, RRx, RSx, RTx, RUx, RVx, RWx, RXx • 2875-all	42T0688	N

Table 42. Parts list—15.6-inch HD LCD (continued)

No.	FRU (15.6-inch HD LCD)	FRU no.	CRU ID
8	LCD module, 15.6-inch HD glossy • 2847-CTO, 22x, 23x, 33x, 34x, 35x, 36x, 37x, 38x, 39x, 3Dx, 3Ex, 3Kx, 3Lx, 3Mx, 3Nx, 3Px, 3Qx, 42x, 43x, 44x, 45x, 46x, 47x, 48x, 49x, 4Ax, 4Bx, 4Cx, 4Dx, 4Ex, 4Fx, 4Gx, 4Hx, 4Jx, 4Tx, 4Ux, 4Vx, 4Xx, 4Yx, 4Zx, 52x, 53x, 54x, 55x, 56x, 57x, 58x, 59x, 5Ax, 5Bx, 5Cx, 5Dx, 5Ex, 5Fx, 5Gx, 5Hx, 5Jx, 5Kx, 5Lx, 5Mx, 5Nx, 5Px, 5Qx, 5Rx, 5Sx, 5Tx, 5Ux, 5Vx, 5Wx, 5Xx, 5Yx, 5Zx, 62x, 63x, 64x, 65x, 66x, 67x, 6Jx, 6Kx, 6Lx, 6Rx, 6Sx, 6Tx, 6Ux, 6Vx, 6Wx, 6Xx, 6Yx, 6Zx, 73x, 74x, 75x, 76x, 77x, 78x, 79x, 7Ax, 7Bx, 7Cx, 7Dx, 7Ex, 7Fx, 7Jx, 7Wx, 7Xx, 7Yx, 82x, 83x, 84x, 85x, 86x, 87x, 88x, 89x, 8Ax, 8Bx, 8Cx, 8Dx, 8Ex, 8Fx, 8Hx, 8Kx, 8Nx, 8Qx, 8Sx, 8Ux, 8Wx, 92x, 93x, 94x, 95x, 96x, 97x, 98x, 99x, 9Ax, 9Bx, 9Ex, 9Jx, 9Kx, 9Lx, 9Mx, 9Nx, 9Px, 9Qx, 9Rx, 9Sx, 9Tx, 9Vx, A2x, A3x, A4x, A8x, ANx, APx, ARx, AUx, AVx, AYx, AZx, B2x, B3x, B4x, BBx, BCx, BDx, BGx, BHx, BJx, BKx, BRx, C8x, CAx, CBx, CCx, CDx, CEx, CFx, CLx, CMx, CNx, CUx, CVx, CWx, CXx, CYx, D4x, D5x, D6x, D7x, Q2x, Q3x, Q4x, Q5x, Q6x, Q7x, Q8x, Q9x, QAx, QBx, QCx, R2x, R3x, R4x, R5x, R6x, R7x, R8x, R9x, RAx, RBx, RCx, RDx, RFx, RGx, RHx, RJx, RKx, RLx, RMx, RNx, RPx, RQx, RRx, RSx, RTx, RUx, RVx, RWx, RXx • 2875-all	42T0662	N
8	LCD module, 15.6-inch HD glossy • 2847-CTO, 22x, 23x, 33x, 34x, 35x, 36x, 37x, 38x, 39x, 3Dx, 3Ex, 3Kx, 3Lx, 3Mx, 3Nx, 3Px, 3Qx, 42x, 43x, 44x, 45x, 46x, 47x, 48x, 49x, 4Ax, 4Bx, 4Cx, 4Dx, 4Ex, 4Fx, 4Gx, 4Hx, 4Jx, 4Tx, 4Ux, 4Vx, 4Xx, 4Yx, 4Zx, 52x, 53x, 54x, 55x, 56x, 57x, 58x, 59x, 5Ax, 5Bx, 5Cx, 5Dx, 5Ex, 5Fx, 5Gx, 5Hx, 5Jx, 5Kx, 5Lx, 5Mx, 5Nx, 5Px, 5Qx, 5Rx, 5Sx, 5Tx, 5Ux, 5Vx, 5Wx, 5Xx, 5Yx, 5Zx, 62x, 63x, 64x, 65x, 66x, 67x, 6Jx, 6Kx, 6Lx, 6Rx, 6Sx, 6Tx, 6Ux, 6Vx, 6Wx, 6Xx, 6Yx, 6Zx, 73x, 74x, 75x, 76x, 77x, 78x, 79x, 7Ax, 7Bx, 7Cx, 7Dx, 7Ex, 7Fx, 7Jx, 7Wx, 7Xx, 7Yx, 82x, 83x, 84x, 85x, 86x, 87x, 88x, 89x, 8Ax, 8Bx, 8Cx, 8Dx, 8Ex, 8Fx, 8Hx, 8Kx, 8Nx, 8Qx, 8Sx, 8Ux, 8Wx, 92x, 93x, 94x, 95x, 96x, 97x, 98x, 99x, 9Ax, 9Bx, 9Ex, 9Jx, 9Kx, 9Lx, 9Mx, 9Nx, 9Px, 9Qx, 9Rx, 9Sx, 9Tx, 9Vx, A2x, A3x, A4x, A8x, ANx, APx, ARx, AUx, AVx, AYx, AZx, B2x, B3x, B4x, BBx, BCx, BDx, BGx, BHx, BJx, BKx, BRx, C8x, CAx, CBx, CCx, CDx, CEx, CFx, CLx, CMx, CNx, CUx, CVx, CWx, CXx, CYx, D4x, D5x, D6x, D7x, Q2x, Q3x, Q4x, Q5x, Q6x, Q7x, Q8x, Q9x, QAx, QBx, QCx, R2x, R3x, R4x, R5x, R6x, R7x, R8x, R9x, RAx, RBx, RCx, RDx, RFx, RGx, RHx, RJx, RKx, RLx, RMx, RNx, RPx, RQx, RRx, RSx, RTx, RUx, RVx, RWx, RXx • 2875-all	27R2407	N
8	LCD module, 15.6-inch HD glossy • 2847-CTO, 22x, 23x, 33x, 34x, 35x, 36x, 37x, 38x, 39x, 3Dx, 3Ex, 3Kx, 3Lx, 3Mx, 3Nx, 3Px, 3Qx, 42x, 43x, 44x, 45x, 46x, 47x, 48x, 49x, 4Ax, 4Bx, 4Cx, 4Dx, 4Ex, 4Fx, 4Gx, 4Hx, 4Jx, 4Tx, 4Ux, 4Vx, 4Xx, 4Yx, 4Zx, 52x, 53x, 54x, 55x, 56x, 57x, 58x, 59x, 5Ax, 5Bx, 5Cx, 5Dx, 5Ex, 5Fx, 5Gx, 5Hx, 5Jx, 5Kx, 5Lx, 5Mx, 5Nx, 5Px, 5Qx, 5Rx, 5Sx, 5Tx, 5Ux, 5Vx, 5Wx, 5Xx, 5Yx, 5Zx, 62x, 63x, 64x, 65x, 66x, 67x, 6Jx, 6Kx, 6Lx, 6Rx, 6Sx, 6Tx, 6Ux, 6Vx, 6Wx, 6Xx, 6Yx, 6Zx, 73x, 74x, 75x, 76x, 77x, 78x, 79x, 7Ax, 7Bx, 7Cx, 7Dx, 7Ex, 7Fx, 7Jx, 7Wx, 7Xx, 7Yx, 82x, 83x, 84x, 85x, 86x, 87x, 88x, 89x, 8Ax, 8Bx, 8Cx, 8Dx, 8Ex, 8Fx, 8Hx, 8Kx, 8Nx, 8Qx, 8Sx, 8Ux, 8Wx, 92x, 93x, 94x, 95x, 96x, 97x, 98x, 99x, 9Ax, 9Bx, 9Ex, 9Jx, 9Kx, 9Lx, 9Mx, 9Nx, 9Px, 9Qx, 9Rx, 9Sx, 9Tx, 9Vx, A2x, A3x, A4x, A8x, ANx, APx, ARx, AUx, AVx, AYx, AZx, B2x, B3x, B4x, BBx, BCx, BDx, BGx, BHx, BJx, BKx, BRx, C8x, CAx, CBx, CCx, CDx, CEx, CFx, CLx, CMx, CNx, CUx, CVx, CWx, CXx, CYx, D4x, D5x, D6x, D7x, Q2x, Q3x, Q4x, Q5x, Q6x, Q7x, Q8x, Q9x, QAx, QBx, QCx, R2x, R3x, R4x, R5x, R6x, R7x, R8x, R9x, RAx, RBx, RCx, RDx, RFx, RGx, RHx, RJx, RKx, RLx, RMx, RNx, RPx, RQx, RRx, RSx, RTx, RUx, RVx, RWx, RXx • 2875-all	27R2467	N

Table 42. Parts list—15.6-inch HD LCD (continued)

No.	FRU (15.6-inch HD LCD)	FRU no.	CRU ID
8	LCD module, 15.6-inch HD glossy • 2847-CTO, 33x, 34x, 35x, 36x, 37x, 38x, 39x, 3Dx, 3Kx, 3Lx, 3Mx, 3Nx, 3Qx, 42x, 44x, 45x, 46x, 47x, 48x, 49x, 4Ax, 4Bx, 4Cx, 4Dx, 4Ex, 4Fx, 4Gx, 4Hx, 4Jx, 4Tx, 4Ux, 4Vx, 4Xx, 4Yx, 4Zx, 52x, 53x, 54x, 56x, 58x, 5Ax, 5Cx, 5Dx, 5Ex, 5Fx, 5Gx, 5Hx, 5Jx, 5Kx, 5Lx, 5Mx, 5Nx, 5Px, 5Qx, 5Rx, 5Sx, 5Tx, 5Ux, 5Vx, 5Wx, 5Xx, 5Yx, 5Zx, 62x, 63x, 64x, 65x, 66x, 67x, 6Jx, 6Lx, 6Rx, 6Sx, 6Tx, 6Ux, 6Vx, 6Wx, 6Xx, 6Yx, 6Zx, 73x, 74x, 75x, 76x, 77x, 78x, 79x, 7Ax, 7Bx, 7Cx, 7Dx, 7Ex, 7Fx, 7Jx, 7Wx, 7Xx, 7Yx, 82x, 83x, 84x, 86x, 87x, 89x, 8Ax, 8Bx, 8Cx, 8Dx, 8Ex, 8Fx, 8Hx, 8Kx, 8Nx, 8Qx, 8Sx, 8Ux, 8Wx, 92x, 93x, 95x, 97x, 99x, 9Ax, 9Bx, 9Ex, 9Jx, 9Kx, 9Lx, 9Mx, 9Nx, 9Px, 9Qx, 9Rx, 9Sx, 9Tx, 9Vx, A2x, A3x, A4x, A8x, ANx, APx, ARx, AUx, AVx, AYx, AZx, B2x, B3x, B4x, BBx, BCx, BGx, BJx, BRx, C8x, CAx, CBx, CCx, CDx, CEx, CFx, CLx, CMx, CNx, CUx, CVx, CWx, CXx, CYx, D4x, D5x, D6x, D7x, Q2x, Q3x, Q5x, Q7x, Q9x, QBx, R2x, R3x, R4x, R5x, R6x, R7x, R8x, R9x, RAx, RBx, RCx, RDx, RFx, RGx, RHx, RJx, RKx, RLx, RMx, RNx, RPx, RQx, RRx, RSx, RTx, RUx, RVx, RWx, RXx, • 2875-CTO	93P5651	N
8	LCD module, 15.6-inch HD glossy • 2847-CTO, 22x, 23x, 33x, 34x, 35x, 36x, 37x, 38x, 39x, 3Dx, 3Ex, 3Kx, 3Lx, 3Mx, 3Nx, 3Px, 3Qx, 42x, 43x, 44x, 45x, 46x, 47x, 48x, 49x, 4Ax, 4Bx, 4Cx, 4Dx, 4Ex, 4Fx, 4Gx, 4Hx, 4Jx, 4Tx, 4Ux, 4Vx, 4Xx, 4Yx, 4Zx, 52x, 53x, 54x, 55x, 56x, 57x, 58x, 59x, 5Ax, 5Bx, 5Cx, 5Dx, 5Ex, 5Fx, 5Gx, 5Hx, 5Jx, 5Kx, 5Lx, 5Mx, 5Nx, 5Px, 5Qx, 5Rx, 5Sx, 5Tx, 5Ux, 5Vx, 5Wx, 5Xx, 5Yx, 5Zx, 62x, 63x, 64x, 65x, 66x, 67x, 6Jx, 6Kx, 6Lx, 6Rx, 6Sx, 6Tx, 6Ux, 6Vx, 6Wx, 6Xx, 6Yx, 6Zx, 73x, 74x, 75x, 76x, 77x, 78x, 79x, 7Ax, 7Bx, 7Cx, 7Dx, 7Ex, 7Fx, 7Jx, 7Wx, 7Xx, 7Yx, 82x, 83x, 84x, 85x, 86x, 87x, 88x, 89x, 8Ax, 8Bx, 8Cx, 8Dx, 8Ex, 8Fx, 8Hx, 8Kx, 8Nx, 8Qx, 8Sx, 8Ux, 8Wx, 92x, 93x, 94x, 95x, 96x, 97x, 98x, 99x, 9Ax, 9Bx, 9Ex, 9Jx, 9Kx, 9Lx, 9Mx, 9Nx, 9Px, 9Qx, 9Rx, 9Sx, 9Tx, 9Vx, A2x, A3x, A4x, A8x, ANx, APx, ARx, AUx, AVx, AYx, AZx, B2x, B3x, B4x, BBx, BCx, BDx, BGx, BHx, BJx, BKx, BRx, C8x, CAx, CBx, CCx, CDx, CEx, CFx, CLx, CMx, CNx, CUx, CVx, CWx, CXx, CYx, D4x, D5x, D6x, D7x, Q2x, Q3x, Q4x, Q5x, Q6x, Q7x, Q8x, Q9x, QAx, QBx, QCx, R2x, R3x, R4x, R5x, R6x, R7x, R8x, R9x, RAx, RBx, RCx, RDx, RFx, RGx, RHx, RJx, RKx, RLx, RMx, RNx, RPx, RQx, RRx, RSx, RTx, RUx, RVx, RWx, RXx • 2875-all	93P5711	N
8	LCD module, 15.6-inch HD anti-glair • 2847-CTO, 24x, 25x, 26x, 27x, 28x, 29x, 2Ax, 2Bx, 2Cx, 2Dx, 2Ex, 2Fx, 2Gx, 2Hx, 2Jx, 2Kx, 2Lx, 2Mx, 2Nx, 2Px, 2Qx, 2Rx, 2Sx, 2Tx, 2Ux, 2Vx, 2Wx, 2Xx, 2Yx, 2Zx, 3Vx, 3Wx, 3Xx, 3Yx, 3Zx, 4Nx, 4Px, 4Qx, 4Rx, 4Sx, 4Wx, 68x, 69x, 6Ax, 6Bx, 6Cx, 6Dx, 6Ex, 6Fx, 6Gx, 6Hx, 6Mx, 6Nx, 6Px, 6Qx, 72x, 7Kx, 7Lx, 7Mx, 7Nx, 7Px, 7Qx, 7Rx, 7Sx, 7Tx, 7Ux, 7Vx, 7Zx, 8Gx, 8Jx, 8Lx, 8Mx, 8Px, 8Rx, 8Tx, 8Vx, 8Xx, 8Yx, 8Zx, 9Cx, 9Dx, 9Fx, 9Gx, 9Hx, 9Ux, 9Wx, 9Xx, 9Yx, 9Zx, A5x, A6x, A7x, A9x, AAx, ABx, ACx, ADx, AEx, AFx, AGx, AHx, AJx, AKx, ALx, AMx, AQx, ASx, ATx, AWx, AXx, B5x, B6x, B7x, B8x, B9x, BAx, BEx, BFx, BMx, BNx, BPx, BQx, BSx, BTx, BUx, BVx, BWx, BXx, BYx, BZx, C2x, C3x, C4x, C5x, C6x, C7x, C9x, CGx, CHx, CJx, CKx, CPx, CQx, CRx, CSx, CZx, D2x, D3x, D8x, D9x, DAx, DBx, DCx, DDx, DEx, DFx, DGx, DHx, DJx, DKx, DLx, QDx, QEx, QFx, QGx, QHx, QJx • 2873-CTO, 22x, 32x, 33x • 5072-all	42T0650	N

Table 42. Parts list—15.6-inch HD LCD (continued)

No.	FRU (15.6-inch HD LCD)	FRU no.	CRU ID
8	LCD module, 15.6-inch HD anti-glair • 2847-CTO, 24x, 25x, 26x, 27x, 28x, 29x, 2Ax, 2Bx, 2Cx, 2Dx, 2Ex, 2Fx, 2Gx, 2Hx, 2Jx, 2Kx, 2Lx, 2Mx, 2Nx, 2Px, 2Qx, 2Rx, 2Sx, 2Tx, 2Ux, 2Vx, 2Wx, 2Xx, 2Yx, 2Zx, 3Vx, 3Wx, 3Xx, 3Yx, 3Zx, 4Nx, 4Px, 4Qx, 4Rx, 4Sx, 4Wx, 68x, 69x, 6Ax, 6Bx, 6Cx, 6Dx, 6Ex, 6Fx, 6Gx, 6Hx, 6Mx, 6Nx, 6Px, 6Qx, 72x, 7Kx, 7Lx, 7Mx, 7Nx, 7Px, 7Qx, 7Rx, 7Sx, 7Tx, 7Ux, 7Vx, 7Zx, 8Gx, 8Jx, 8Lx, 8Mx, 8Px, 8Rx, 8Tx, 8Vx, 8Xx, 8Yx, 8Zx, 9Cx, 9Dx, 9Fx, 9Gx, 9Hx, 9Ux, 9Wx, 9Xx, 9Yx, 9Zx, A5x, A6x, A7x, A9x, AAx, ABx, ACx, ADx, AEx, AFx, AGx, AHx, AJx, AKx, ALx, AMx, AQx, ASx, ATx, AWx, AXx, B5x, B6x, B7x, B8x, B9x, BAx, BEx, BFx, BMx, BNx, BPx, BQx, BSx, BTx, BUx, BVx, BWx, BXx, BYx, BZx, C2x, C3x, C4x, C5x, C6x, C7x, C9x, CGx, CHx, CJx, CKx, CPx, CQx, CRx, CSx, CZx, D2x, D3x, D8x, D9x, DAx, DBx, DCx, DDx, DEx, DFx, DGx, DHx, DJx, DKx, DLx, QDx, QEx, QFx, QGx, QHx, QJx • 2873-CTO, 22x, 32x, 33x • 5072-all	42T0672	N
8	LCD module, 15.6-inch HD anti-glair • 2847-CTO, 24x, 25x, 26x, 27x, 28x, 29x, 2Ax, 2Bx, 2Cx, 2Dx, 2Ex, 2Fx, 2Gx, 2Hx, 2Jx, 2Kx, 2Lx, 2Mx, 2Nx, 2Px, 2Qx, 2Rx, 2Sx, 2Tx, 2Ux, 2Vx, 2Wx, 2Xx, 2Yx, 2Zx, 3Vx, 3Wx, 3Xx, 3Yx, 3Zx, 4Nx, 4Px, 4Qx, 4Rx, 4Sx, 4Wx, 68x, 69x, 6Ax, 6Bx, 6Cx, 6Dx, 6Ex, 6Fx, 6Gx, 6Hx, 6Mx, 6Nx, 6Px, 6Qx, 72x, 7Kx, 7Lx, 7Mx, 7Nx, 7Px, 7Qx, 7Rx, 7Sx, 7Tx, 7Ux, 7Vx, 7Zx, 8Gx, 8Jx, 8Lx, 8Mx, 8Px, 8Rx, 8Tx, 8Vx, 8Xx, 8Yx, 8Zx, 9Cx, 9Dx, 9Fx, 9Gx, 9Hx, 9Ux, 9Wx, 9Xx, 9Yx, 9Zx, A5x, A6x, A7x, A9x, AAx, ABx, ACx, ADx, AEx, AFx, AGx, AHx, AJx, AKx, ALx, AMx, AQx, ASx, ATx, AWx, AXx, B5x, B6x, B7x, B8x, B9x, BAx, BEx, BFx, BMx, BNx, BPx, BQx, BSx, BTx, BUx, BVx, BWx, BXx, BYx, BZx, C2x, C3x, C4x, C5x, C6x, C7x, C9x, CGx, CHx, CJx, CKx, CPx, CQx, CRx, CSx, CZx, D2x, D3x, D8x, D9x, DAx, DBx, DCx, DDx, DEx, DFx, DGx, DHx, DJx, DKx, DLx, QDx, QEx, QFx, QGx, QHx, QJx • 2873-CTO, 22x, 32x, 33x • 5072-all	42T0686	N
8	LCD module, 15.6-inch HD anti-glair • 2847-CTO, 24x, 25x, 26x, 27x, 28x, 29x, 2Ax, 2Bx, 2Cx, 2Dx, 2Ex, 2Fx, 2Gx, 2Hx, 2Jx, 2Kx, 2Lx, 2Mx, 2Nx, 2Px, 2Qx, 2Rx, 2Sx, 2Tx, 2Ux, 2Vx, 2Wx, 2Xx, 2Yx, 2Zx, 3Vx, 3Wx, 3Xx, 3Yx, 3Zx, 4Nx, 4Px, 4Qx, 4Rx, 4Sx, 4Wx, 68x, 69x, 6Ax, 6Bx, 6Cx, 6Dx, 6Ex, 6Fx, 6Gx, 6Hx, 6Mx, 6Nx, 6Px, 6Qx, 72x, 7Kx, 7Lx, 7Mx, 7Nx, 7Px, 7Qx, 7Rx, 7Sx, 7Tx, 7Ux, 7Vx, 7Zx, 8Gx, 8Jx, 8Lx, 8Mx, 8Px, 8Rx, 8Tx, 8Vx, 8Xx, 8Yx, 8Zx, 9Cx, 9Dx, 9Fx, 9Gx, 9Hx, 9Ux, 9Wx, 9Xx, 9Yx, 9Zx, A5x, A6x, A7x, A9x, AAx, ABx, ACx, ADx, AEx, AFx, AGx, AHx, AJx, AKx, ALx, AMx, AQx, ASx, ATx, AWx, AXx, B5x, B6x, B7x, B8x, B9x, BAx, BEx, BFx, BMx, BNx, BPx, BQx, BSx, BTx, BUx, BVx, BWx, BXx, BYx, BZx, C2x, C3x, C4x, C5x, C6x, C7x, C9x, CGx, CHx, CJx, CKx, CPx, CQx, CRx, CSx, CZx, D2x, D3x, D8x, D9x, DAx, DBx, DCx, DDx, DEx, DFx, DGx, DHx, DJx, DKx, DLx, QDx, QEx, QFx, QGx, QHx, QJx • 2873-CTO, 22x, 32x, 33x • 5072-all • 2550-all • 2597-all • 2598-all • 2599-all • 4444-all • 4447-all	42T0660	N

Table 42. Parts list—15.6-inch HD LCD (continued)

No.	FRU (15.6-inch HD LCD)	FRU no.	CRU ID
8	LCD module, 15.6-inch HD anti-glair • 2847-CTO, 24x, 25x, 26x, 27x, 28x, 29x, 2Ax, 2Bx, 2Cx, 2Dx, 2Ex, 2Fx, 2Gx, 2Hx, 2Jx, 2Kx, 2Lx, 2Mx, 2Nx, 2Px, 2Qx, 2Rx, 2Sx, 2Tx, 2Ux, 2Vx, 2Wx, 2Xx, 2Yx, 2Zx, 3Vx, 3Wx, 3Xx, 3Yx, 3Zx, 4Nx, 4Px, 4Qx, 4Rx, 4Sx, 4Wx, 68x, 69x, 6Ax, 6Bx, 6Cx, 6Dx, 6Ex, 6Fx, 6Gx, 6Hx, 6Mx, 6Nx, 6Px, 6Qx, 72x, 7Kx, 7Lx, 7Mx, 7Nx, 7Px, 7Qx, 7Rx, 7Sx, 7Tx, 7Ux, 7Vx, 7Zx, 8Gx, 8Jx, 8Lx, 8Mx, 8Px, 8Rx, 8Tx, 8Vx, 8Xx, 8Yx, 8Zx, 9Cx, 9Dx, 9Fx, 9Gx, 9Hx, 9Ux, 9Wx, 9Xx, 9Yx, 9Zx, A5x, A6x, A7x, A9x, AAx, ABx, ACx, ADx, AEx, AFx, AGx, AHx, AJx, AKx, ALx, AMx, AQx, ASx, ATx, AWx, AXx, B5x, B6x, B7x, B8x, B9x, BAx, BEx, BFx, BMx, BNx, BPx, BQx, BSx, BTx, BUx, BVx, BWx, BXx, BYx, BZx, C2x, C3x, C4x, C5x, C6x, C7x, C9x, CGx, CHx, CJx, CKx, CPx, CQx, CRx, CSx, CZx, D2x, D3x, D8x, D9x, DAx, DBx, DCx, DDx, DEx, DFx, DGx, DHx, DJx, DKx, DLx, QDx, QEx, QFx, QGx, QHx, QJx • 2873-CTO, 22x, 32x, 33x • 5072-all • 2550-CTO, 52x, 53x, 54x, 55x, 57x, 58x, 59x, 5Ax, 5Bx, 5Dx, 5Fx, 5Hx, 5Kx, 5Mx, 5Px, 5Rx, 5Tx, 5Vx, 5Xx, 5Yx, 63x, 64x, 65x, 66x, 67x, 68x, 69x, 6Ax • 2597-CTO, 22x, 32x, 52x, 54x, 56x, 58x, 59x, 5Ax, 5Bx, 5Cx, 5Dx, 5Ex, 5Fx, 5Gx, 5Hx, 5Jx, 5Kx, 5Lx, 5Mx, 5Nx, 5Px, 5Qx, 5Rx, 5Sx, 5Tx, 5Vx, 5Wx, 65x, 6Ax, 6Bx, 6Cx, 6Dx, 6Ex, 6Fx, 6Gx, 6Hx, 6Jx, 6Kx, 6Lx, 6Mx • 2598-CTO, 22x, 33x, 56x, 57x, 58x, 59x, 5Dx, 5Fx, 5Hx, 5Kx, 5Mx, 5Px, 5Rx, 5Tx, 5Vx, 5Wx, 5Xx, 5Yx, 5Zx, 62x, 63x, 64x, 67x, 68x, 69x, 6Ax, 6Bx, 6Cx, 6Dx, 6Ex, 6Fx, 6Gx, 6Jx, 6Kx, 6Px, 6Zx, 73x, 74x, 76x, 7Gx, 7Hx, 7Jx, 7Kx, 7Vx, 7Wx, 82x, 84x, R2x • 2599-CTO • 4444-CTO, 35x, 39x, 3Ax, 3Bx, 3Cx, 3Dx, 3Ex, 3Fx, 3Gx, 3Hx, 3Jx, 3Kx, 3Lx, 3Vx, 3Wx, 3Yx, 3Zx, 42x, 43x, 44x, 45x, 46x, 47x, 48x, 49x, 4Ax, 4Kx, 4Lx, 4Mx, 4Rx, 4Sx, 4Tx, 4Ux, 4Yx, 4Zx, 52x, 59x, 5Ax • 4447-CTO, 34x, 35x, 36x, 37x, 38x, 39x, 3Ax, 3Bx, 3Cx, 3Dx, 7Lx, 7Mx, 7Nx, 7Px	27R2469	N
8	LCD module, 15.6-inch HD anti-glair • 2550-all • 2597-all • 2598-all • 2599-all • 4444-all • 4447-all	27R2473	N
8	LCD module, 15.6-inch HD anti-glair • 2847-CTO, 24x, 25x, 26x, 27x, 28x, 29x, 2Ax, 2Bx, 2Cx, 2Dx, 2Ex, 2Fx, 2Gx, 2Hx, 2Jx, 2Kx, 2Lx, 2Mx, 2Nx, 2Px, 2Qx, 2Rx, 2Sx, 2Tx, 2Ux, 2Vx, 2Wx, 2Xx, 2Yx, 2Zx, 3Vx, 3Wx, 3Xx, 3Yx, 3Zx, 4Nx, 4Px, 4Qx, 4Rx, 4Sx, 4Wx, 68x, 69x, 6Ax, 6Bx, 6Cx, 6Dx, 6Ex, 6Fx, 6Gx, 6Hx, 6Mx, 6Nx, 6Px, 6Qx, 72x, 7Kx, 7Lx, 7Mx, 7Nx, 7Px, 7Qx, 7Rx, 7Sx, 7Tx, 7Ux, 7Vx, 7Zx, 8Gx, 8Jx, 8Lx, 8Mx, 8Px, 8Rx, 8Tx, 8Vx, 8Xx, 8Yx, 8Zx, 9Cx, 9Dx, 9Fx, 9Gx, 9Hx, 9Ux, 9Wx, 9Xx, 9Yx, 9Zx, A5x, A6x, A7x, A9x, AAx, ABx, ACx, ADx, AEx, AFx, AGx, AHx, AJx, AKx, ALx, AMx, AQx, ASx, ATx, AWx, AXx, B5x, B6x, B7x, B8x, B9x, BAx, BEx, BFx, BMx, BNx, BPx, BQx, BSx, BTx, BUx, BVx, BWx, BXx, BYx, BZx, C2x, C3x, C4x, C5x, C6x, C7x, C9x, CGx, CHx, CJx, CKx, CPx, CQx, CRx, CSx, CZx, D2x, D3x, D8x, D9x, DAx, DBx, DCx, DDx, DEx, DFx, DGx, DHx, DJx, DKx, DLx, QDx, QEx, QFx, QGx, QHx, QJx • 2873-CTO, 22x, 32x, 33x • 5072-all • 2550-all • 2597-all • 2598-all • 2599-all • 4444-all • 4447-all	27R2405	N

Table 42. Parts list—15.6-inch HD LCD (continued)

No.	FRU (15.6-inch HD LCD)	FRU no.	CRU ID
8	LCD module, 15.6-inch HD anti-glair • 2550-all • 2597-all • 2598-all • 2599-all • 4444-all • 4447-all	27R2483	N
8	LCD module, 15.6-inch HD anti-glair • 2550-all • 2597-all • 2598-all • 2599-all • 4444-all • 4447-all	93P5699	N
8	LCD module, 15.6-inch HD anti-glair • 2847-CTO, 24x, 25x, 26x, 27x, 28x, 29x, 2Ax, 2Bx, 2Cx, 2Dx, 2Ex, 2Fx, 2Gx, 2Hx, 2Jx, 2Kx, 2Lx, 2Mx, 2Px, 2Qx, 2Rx, 2Sx, 2Tx, 2Ux, 2Vx, 2Wx, 2Xx, 2Yx, 2Zx, 3Vx, 3Wx, 3Xx, 3Yx, 3Zx, 4Nx, 4Px, 4Qx, 4Rx, 4Sx, 4Wx, 68x, 6Ax, 6Cx, 6Ex, 6Gx, 6Mx, 6Nx, 6Px, 6Qx, 72x, 7Kx, 7Lx, 7Mx, 7Nx, 7Px, 7Qx, 7Rx, 7Sx, 7Tx, 7Ux, 7Vx, 7Zx, 8Gx, 8Jx, 8Lx, 8Mx, 8Px, 8Rx, 8Tx, 8Vx, 8Xx, 8Yx, 8Zx, 9Cx, 9Dx, 9Fx, 9Gx, 9Hx, 9Ux, 9Wx, 9Xx, 9Yx, A5x, A6x, A7x, A9x, AAx, ABx, ACx, ADx, AEx, AFx, AGx, AHx, AJx, AKx, ALx, AMx, AQx, ASx, ATx, AWx, AXx, B5x, B6x, B7x, B8x, B9x, BAx, BEx, BMx, BNx, BPx, BQx, BSx, BTx, BUx, BVx, BWx, BXx, BYx, BZx, C2x, C3x, C4x, C5x, C6x, C7x, C9x, CGx, CHx, CJx, CKx, CPx, CQx, CRx, CSx, CZx, D2x, D3x, D8x, D9x, DAx, DBx, DCx, DDx, DEx, DFx, DGx, DHx, DJx, DKx, DLx, QDx, QEx, QFx, QGx, QHx, QJx • 2873-CTO, 22x, 32x, 33x • 5072-all • 2550-CTO, 52x, 53x, 54x, 55x, 57x, 58x, 59x, 5Ax, 5Bx, 5Dx, 5Fx, 5Hx, 5Kx, 5Mx, 5Px, 5Rx, 5Tx, 5Vx, 5Xx, 5Yx, 63x, 64x, 65x, 66x, 67x, 68x, 69x, 6Ax • 2597-CTO, 22x, 32x, 52x, 54x, 56x, 58x, 59x, 5Ax, 5Bx, 5Cx, 5Dx, 5Ex, 5Fx, 5Gx, 5Hx, 5Jx, 5Kx, 5Lx, 5Mx, 5Nx, 5Px, 5Qx, 5Rx, 5Sx, 5Tx, 5Vx, 5Wx, 65x, 6Ax, 6Bx, 6Cx, 6Dx, 6Ex, 6Fx, 6Gx, 6Hx, 6Jx, 6Kx, 6Lx, 6Mx • 2598-CTO, 22x, 33x, 56x, 57x, 58x, 59x, 5Dx, 5Fx, 5Hx, 5Kx, 5Mx, 5Px, 5Rx, 5Tx, 5Vx, 5Wx, 5Xx, 5Yx, 5Zx, 62x, 63x, 64x, 67x, 68x, 69x, 6Ax, 6Bx, 6Cx, 6Dx, 6Ex, 6Fx, 6Gx, 6Jx, 6Kx, 6Px, 6Zx, 73x, 74x, 76x, 7Gx, 7Hx, 7Jx, 7Kx, 7Vx, 7Wx, 82x, 84x, R2x • 2599-CTO • 4444-CTO, 35x, 39x, 3Ax, 3Bx, 3Cx, 3Dx, 3Ex, 3Fx, 3Gx, 3Hx, 3Jx, 3Kx, 3Lx, 3Vx, 3Wx, 3Yx, 3Zx, 42x, 43x, 44x, 45x, 46x, 47x, 48x, 49x, 4Ax, 4Kx, 4Lx, 4Mx, 4Rx, 4Sx, 4Tx, 4Ux, 4Yx, 4Zx, 52x, 59x, 5Ax • 4447-CTO, 34x, 35x, 36x, 37x, 38x, 39x, 3Ax, 3Bx, 3Cx, 3Dx, 7Lx, 7Mx, 7Nx, 7Px	93P5653	N

Table 42. Parts list—15.6-inch HD LCD (continued)

No.	FRU (15.6-inch HD LCD)	FRU no.	CRU ID
8	LCD module, 15.6-inch HD anti-glair • 2847-CTO, 24x, 25x, 26x, 27x, 28x, 29x, 2Ax, 2Bx, 2Cx, 2Dx, 2Ex, 2Fx, 2Gx, 2Hx, 2Jx, 2Kx, 2Lx, 2Mx, 2Nx, 2Px, 2Qx, 2Rx, 2Sx, 2Tx, 2Ux, 2Vx, 2Wx, 2Xx, 2Yx, 2Zx, 3Vx, 3Wx, 3Xx, 3Yx, 3Zx, 4Nx, 4Px, 4Qx, 4Rx, 4Sx, 4Wx, 68x, 69x, 6Ax, 6Bx, 6Cx, 6Dx, 6Ex, 6Fx, 6Gx, 6Hx, 6Mx, 6Nx, 6Px, 6Qx, 72x, 7Kx, 7Lx, 7Mx, 7Nx, 7Px, 7Qx, 7Rx, 7Sx, 7Tx, 7Ux, 7Vx, 7Zx, 8Gx, 8Jx, 8Lx, 8Mx, 8Px, 8Rx, 8Tx, 8Vx, 8Xx, 8Yx, 8Zx, 9Cx, 9Dx, 9Fx, 9Gx, 9Hx, 9Ux, 9Wx, 9Xx, 9Yx, 9Zx, A5x, A6x, A7x, A9x, AAx, ABx, ACx, ADx, AEx, AFx, AGx, AHx, AJx, AKx, ALx, AMx, AQx, ASx, ATx, AWx, AXx, B5x, B6x, B7x, B8x, B9x, BAx, BEx, BFx, BMx, BNx, BPx, BQx, BSx, BTx, BUx, BVx, BWx, BXx, BYx, BZx, C2x, C3x, C4x, C5x, C6x, C7x, C9x, CGx, CHx, CJx, CKx, CPx, CQx, CRx, CSx, CZx, D2x, D3x, D8x, D9x, DAx, DBx, DCx, DDx, DEx, DFx, DGx, DHx, DJx, DKx, DLx, QDx, QEx, QFx, QGx, QHx, QJx • 2873-CTO, 22x, 32x, 33x • 5072-all • 2550-all • 2597-all • 2598-all • 2599-all • 4444-all • 4447-all	93P5709	N
9	Wireless LAN antenna set 15W	45M2853	N

Table 43. Parts list—15.6-inch HD+ LCD

No.	FRU (15.6-inch HD+ LCD)	FRU no.	CRU ID
1	LCD front bezel 15W • 2847-CTO • 2873-CTO • 2875-CTO	60Y4352	N
1	LCD front bezel 15W • 2847-CTO • 2873-CTO • 2875-CTO	60Y5348	N
1	LCD front bezel 15W • 2847-CTO • 2873-CTO • 2875-CTO	75Y4788	N
2	Integrated camera with microphone (0.3M) • 2847-CTO • 2873-CTO • 2875-CTO	60Y3325	N
2	Integrated camera with microphone (2.0M) • 2847-CTO • 2873-CTO • 2875-CTO	60Y3327	N
2	Microphone • 2847-CTO • 2873-CTO • 2875-CTO	60Y3329	N

Table 43. Parts list—15.6-inch HD+ LCD (continued)

No.	FRU (15.6-inch HD+ LCD)	FRU no.	CRU ID
3	Wireless WAN antenna set 15W • 2847-CTO • 2873-CTO • 2875-CTO	45M2854	N
4	Hinges 15W	60Y4349	N
4	Hinges 15W	60Y4350	N
5	LCD cover kit Paint 15W (with logo) • 2847-CTO • 2873-CTO • 2875-CTO	60Y5346	N
5	LCD cover kit Paint 15W (with logo) • 2847-CTO • 2873-CTO • 2875-CTO	75Y4786	N
6	Speaker assembly for 15W	60Y3334	N
7	LCD cable, HD+, Teflon 15W • 2847-CTO • 2873-CTO • 2875-CTO	45M2859	N
7	LCD cable, HD+, Coaxial 15W • 2847-CTO • 2873-CTO • 2875-CTO	45M2860	N
8	LCD module, 15.6-inch HD+ glair • 2847-CTO • 2873-CTO • 2875-CTO	42T0676	N
8	LCD module, 15.6-inch HD+ glair • 2847-CTO • 2873-CTO • 2875-CTO	42T0690	N
9	Wireless LAN antenna set 15W	45M2853	N

Keyboard

Table 44. Parts list—Keyboard

Language	FRU no.			CRU ID
Arabic	45N2288	45N2358	45N2428	N
Belgian	45N2289	45N2359	45N2429	
Brazilian Portuguese	45N2287	45N2357	45N2427	
Bulgarian	45N2290	45N2360	45N2430	
Canadian French (058)	45N2285	45N2355	45N2425	
Canadian French (Acnor)	45N2284	45N2354	45N2424	
Czech	45N2291	45N2361	45N2431	

Table 44. Parts list—Keyboard (continued)

Language	FRU no.			CRU ID
Danish	45N2292	45N2362	45N2432	
Dutch	45N2302	45N2372	45N2442	
Finnish, Swedish	45N2309	45N2379	45N2449	
French	45N2294	45N2364	45N2434	
German	45N2295	45N2365	45N2435	
Greek (U.S. English and Greek layout)	45N2296	45N2366	45N2436	
Hebrew	45N2297	45N2367	45N2437	
Hungarian	45N2298	45N2368	45N2438	
Icelandic	45N2299	45N2369	45N2439	
Italian	45N2300	45N2370	45N2440	
Japanese	45N2314	45N2384	45N2454	
Korean	45N2315	45N2385	45N2455	
Latin American Spanish	45N2286	45N2356	45N2426	
Norwegian	45N2303	45N2373	45N2443	
Polish	45N2304	45N2374	45N2444	
Portuguese	45N2305	45N2375	45N2445	
Russian	45N2306	45N2376	45N2446	
Slovak	45N2307	45N2377	45N2447	
Slovenian	45N2308	45N2378	45N2448	
Spanish	45N2293	45N2363	45N2433	
Swiss	45N2310	45N2380	45N2450	
Thai	45N2317	45N2387	45N2457	
Traditional Chinese	45N2316	45N2386	45N2456	
Turkish	45N2311	45N2381	45N2451	
Turkish F	60Y9558	60Y9560	60Y9556	
U.K. English	45N2312	45N2382	45N2452	
U.S. English	45N2283	45N2353	45N2423	
U.S. English (International, with a Euro symbol)	45N2313	45N2383	45N2453	

Miscellaneous parts

Table 45. Parts list—Miscellaneous parts

FRU	FRU no.	CRU ID
Screw kit (including nylon-coated screws): • M2 × 3 mm (silver), small head (35) • M2 × 4 mm (black), bind head (15) • M2 × 4 mm (black), small head (4) • M2 × 6 mm (black), bind head (25) • M2 × 3 mm tamper proof (4) • Shoulder screw M2 (4) • Hex stud (4) • Security screw M2 × 4 mm (2)	60Y4343	N
Seal kit: • Tape for LCD cable (large) • Tape S (cable fix) • Tape L (cable fix) • Screw cap, thin • Screw cap square	60Y4344	N
System board miscellaneous parts 14W for ThinkPad L410 and SL410	60Y4414	N
System board miscellaneous parts 15W for ThinkPad L510 and SL510	60Y4415	N

Table 46. Parts list—Miscellaneous parts

FRU	FRU no.	CRU ID
• Rubber foot (front) • Rubber foot (rear) • LCD latch knob • LCD latch • Latch link wire • LCD latch spring • Wireless radio switch knob • Wireless radio switch latch • Security keyhole bracket • EMI spring (optical drive) • EMI spring (HDD front) • EMI spring (HDD rear) • Gasket (long) • Gasket (short) • HDD guide (front) • HDD rubber rail (front) • HDD guide (rear) • HDD rubber rail (rear) • LCD latch rubber • Pad, battery • Sponge (large) • Sponge (small) • Cap for Mg • Screw M2 × 3		

Table 46. Parts list—Miscellaneous parts (continued)

FRU	FRU no.	CRU ID
System miscellaneous parts: • *(a)* Expansion slot cover • *(b)* HDD cover • I/O sub bracket • Connector cap • Optical drive bracket **Note:** Italicized letters in parentheses are references to the exploded view in “Overall” on page 120.		N
System board miscellaneous parts: • Mini Card stud, system board • Stud, system board • Insulation (top) • Insulation, black (battery) • Insulation, black (coil) • Insulation, black (SIM) • SIM card bracket • Eject sheet • USB gascket		N
LCD miscellaneous parts: • *(a)* Heat spreader for camera • ThinkPad logo • Lenovo logo • Label (camera) • Label (no camera) • Label (LED) • Tape cable fix (10 × 38) • LCD latch R • LCD latch L • Rubber 0.5 • Rubber 0.8 • Rubber 0.8 long • Rubber 1.0 • Rubber 1.5 • Alpet sheet for LCD • Gasket for LCD • Screw cap, thin • Screw cap, square **Note:** Italicized letter in parentheses is reference to the exploded view in “LCD FRUs” on page 230.		N

AC power adapters

Table 47. Parts list—2-pin ac power adapters

FRU	FRU no.	CRU ID
2-pin (65 W, 20 V) adapter (models CTO, xxE, xxF, xxJ, xxL, xxP, xxS, xxU, xxY)	42T5282	*
2-pin (65 W, 20 V) adapter (models CTO, xxE, xxF, xxJ, xxL, xxP, xxS, xxU, xxY)	42T4423	
2-pin (65 W, 20 V) adapter (models CTO, xxE, xxF, xxJ, xxL, xxP, xxS, xxU, xxY)	42T4419	
2-pin (90 W, 20 V) adapter (models CTO, xxE, xxF, xxJ, xxL, xxP, xxS, xxU, xxY)	42T4427	
2-pin (90 W, 20 V) adapter (models CTO, xxE, xxF, xxJ, xxL, xxP, xxS, xxU, xxY)	42T4431	
2-pin (90 W, 20 V) adapter (models CTO, xxE, xxF, xxJ, xxL, xxP, xxS, xxU, xxY)	42T4435	
2-pin (90 W, 20 V) adapter (models CTO, xxE, xxF, xxJ, xxL, xxP, xxS, xxU, xxY)	42T4439	

Table 48. Parts list—3-pin ac power adapters

FRU	FRU no.	CRU ID
3-pin (65 W, 20 V) adapter (models CTO, xxA, xxB, xxG, xxH, xxK, xxM, xxQ, xxT, xxV)	42T5283	*
3-pin (65 W, 20 V) adapter (models CTO, xxA, xxB, xxG, xxH, xxK, xxM, xxQ, xxT, xxV)	42T4421	
3-pin (65 W, 20 V) adapter (models CTO, xxA, xxB, xxG, xxH, xxK, xxM, xxQ, xxT, xxV)	42T4417	
3-pin (90 W, 20 V) adapter (models CTO, xxA, xxB, xxG, xxH, xxK, xxM, xxQ, xxT, xxV)	42T4425	
3-pin (90 W, 20 V) adapter (models CTO, xxA, xxB, xxG, xxH, xxK, xxM, xxQ, xxT, xxV)	42T4429	
3-pin (90 W, 20 V) adapter (models CTO, xxA, xxB, xxG, xxH, xxK, xxM, xxQ, xxT, xxV)	42T4433	
3-pin (90 W, 20 V) adapter (models CTO, xxA, xxB, xxG, xxH, xxK, xxM, xxQ, xxT, xxV)	45N0068	

Power cords

A ThinkPad power cord for a specific country or region is usually available only in that country or region:

Table 49. Parts list—2-pin power cords

Country or region	FRU no.		CRU ID
Argentina • models -CTO, xxY	42T5020	42T5105	*
Brazil • models -CTO, xxP	42T5180	42T5183	
Canada, U.S. • models -CTO, xxF, xxL, xxS, xxU	42T5008	42T5093	
Japan • models -CTO, xxE, xxJ	42T5014	42T5099	

Table 50. Parts list—3-pin power cords

Country or region	FRU no.		CRU ID
Australia, New Zealand • models -CTO, xxM	42T5050	42T5135	*
Bangladesh, Sri Lanka, South Africa • models -CTO, xxG	42T5056	42T5141	
Canada, U.S. • models -CTO, xxG, xxT	42T5004	42T5089	
China (P.R.C.) (other than Hong Kong S.A.R.) • models -CTO, xxC	42T5065	42T5150	
Denmark • models -CTO, xxG	42T5041	42T5126	
European countries • models -CTO, xxG	42T5029	42T5114	
India • models -CTO, xxQ	42T5083	42T5168	
Israel • models -CTO, xxG	42T5062	42T5147	

Table 50. Parts list—3-pin power cords (continued)

Country or region	FRU no.		CRU ID
Italy • models -CTO, xxG	42T5047	42T5132	
Korea • models -CTO, xxK	42T5077	42T5162	
Switzerland • models -CTO, xxG	42T5044	42T5129	
Taiwan • models -CTO, xxV	42T5071	42T5156	
U.K., China (Hong Kong S.A.R.) • models -CTO, xxB, xxG, xxH	42T5035	42T5120	

Recovery discs

Windows XP Professional (32 bit) DVDs

Windows XP Professional (32 bit) is preinstalled as the operating system in the following models:

- 0616-CTO
- 2842-CTO, 23x, 24x, 25x, 26x, 2Ax, 2Bx, 33x, 35x, 37x, 3Qx, 3Sx, 3Tx, 49x, 4Ax, 4Bx, 4Dx, 4Ex, 4Fx, 4Gx, 5Ex, 5Fx, 5Gx, 5Hx, 5Jx, 5Ux, 5Vx, 5Wx, 5Xx, 6Nx, 77x, 78x, 7Ex, 7Fx, 7Gx, 7Hx, 7Jx, 7Qx, 7Tx, 7Ux, 7Vx, 7Wx, 8Rx, AGx, AHx, ALx, CPx, DGx, DHx, GKx, GWx
- 2847-CTO, 24x, 25x, 26x, 27x, 28x, 29x, 2Bx, 2Cx, 2Dx, 2Ex, 2Fx, 2Gx, 2Jx, 2Mx, 2Nx, 2Px, 2Sx, 2Ux, 2Wx, 2Xx, 2Yx, 34x, 36x, 37x, 38x, 39x, 3Dx, 3Ex, 3Vx, 3Wx, 3Zx, 4Sx, 4Tx, 4Ux, 4Vx, 4Wx, 4Xx, 4Zx, 53x, 54x, 55x, 68x, 69x, 6Px, 7Nx, 93x, 94x, 9Wx, BQx, BRx, Q5x, Q6x, QDx, QEx, QFx, QGx, QHx, QJx
- 2873-CTO
- 2874-CTO, 36x, 39x, 3Kx, 4Ax, 4Fx, 4Jx
- 2875-CTO, 23x, 36x, 39x, 3Wx, 4Ex, 4Fx, 4Gx, 4Jx, 53x, 54x, 55x, 5Px, 5Qx, 5Rx, 5Sx
- 2931-CTO
- 5072-CTO

Table 51. Parts list—Windows XP Professional (32 bit) recovery DVDs

Language	P/N (with Windows 7 Professional)	P/N (with Windows Vista Business)	CRU ID
Brazilian Portuguese	03W7674	58Y4034	*
Czech	03W7677	N/A	
Danish	03W7678	58Y4035	
English	03W7692	58Y2526	
French	03W7679	58Y4036	
German	03W7680	76Y2705	
Hebrew	03W7681	58Y4038	
Hungarian	03W7683	58Y4039	
Italian	03W7684	58Y4040	
Japanese	03W7685	58Y4041	
Polish	03W7686	58Y4042	

Table 51. Parts list—Windows XP Professional (32 bit) recovery DVDs (continued)

Language	P/N (with Windows 7 Professional)	P/N (with Windows Vista Business)	CRU ID
Russian	03W7688	58Y2521	
Russian (English-enabled)	03W7687	58Y2520	
Simplified Chinese	03W7675	58Y2508	
Slovenian	03W7689	58Y4043	
Spanish	03W7690	58Y2523	
Traditional Chinese	03W7676	58Y2509	
Traditional Chinese (Hong Kong S.A.R.)	03W7682	58Y2515	
Turkish	03W7691	58Y4044	

- 0530-CTO, 52x, 62x, 69x, 6Ex
- 0553-CTO, 6Sx
- 0585-CTO
- 0591-CTO
- 4403-CTO, 32x, 3Dx, 3Hx, 3Mx, 3Rx, 3Vx, 4Ex, 4Jx, 5Cx, 5Gx, 5Lx, 5Mx, 5Rx, 5Sx, 5Wx, 5Zx, 63x, 68x
- 4404-CTO, 42x, 45x, 4Cx, 4Fx, 4Hx, 4Kx
- 2550-CTO
- 2597-CTO, 5Xx, 6Ax, 6Dx
- 2598-CTO
- 2599-CTO
- 4444-CTO
- 4447-CTO, 7Nx, 7Px

Table 52. Parts list—Windows XP Professional (32 bit) recovery DVDs

Language	P/N	CRU ID
Brazilian Portuguese	03W7638	
Danish	03W7640	
Dutch	03W7648	
English	03W7654	
Finnish	03W7641	
French	03W7642	
German	03W7643	
Hebrew	03W7644	
Italian	03W7646	
Japanese	03W7647	
Norwegian	03W7649	
Russian	03W7651	
Russian (English-enabled)	03W7650	
Simplified Chinese	03W7639	
Spanish	03W7652	
Swedish	03W7653	
Traditional Chinese (Hong Kong S.A.R.)	03W7645	

Windows Vista Business (32 bit) DVDs

Windows Vista Business (32 bit) is preinstalled as the operating system in the following models:

- 0616-CTO
- 2842-CTO, 22x, 39x, 45x, 47x, 4Jx, 4Lx, 4Mx, 4Nx, 4Sx, 4Tx, 83x, 84x
- 2847-CTO, 22x, 23x, 46x, 47x, 48x, 49x, 75x, 77x
- 2873-CTO, 22x, 32x
- 2874-CTO, 22x, 3Bx, 3Nx
- 2875-CTO, 22x, 3Ax
- 2931-CTO, 22x, 23x, 24x, 25x
- 5072-CTO

Table 53. Parts list—Windows Vista Business (32 bit) recovery DVDs

Language	P/N	CRU ID
English (for India)	58Y2595	*
English	58Y2597	
Korean	58Y2596	
Russian	58Y3189	
Russian (English-enabled)	58Y3188	
Simplified Chinese	58Y2592	
Spanish	58Y3190	
Traditional Chinese	58Y2593	
Traditional Chinese (Hong Kong S.A.R.)	58Y2594	

- 0530-CTO
- 0553-CTO
- 0585-CTO
- 0591-CTO
- 4403-CTO
- 4404-CTO
- 2550-CTO
- 2597-CTO
- 2598-CTO
- 2599-CTO
- 4444-CTO
- 4447-CTO

Table 54. Parts list—Windows Vista Business (32 bit) recovery DVDs

Language	P/N (with MS 2007)	P/N (with MS 2010)	CRU ID
English (for India)	76Y2404	03W7363	*
English	76Y2405	03W7364	
Japanese	03W6001	N/A	

Windows Vista Home Basic (32 bit) DVDs

Windows Vista Home Basic (32 bit) is preinstalled as the operating system in the following models:

- 0616-CTO
- 2842-CTO, 34x, 3Bx, 3Px, 4Ux, 4Vx, 4Wx, 4Xx, 4Yx, 4Zx, 52x, 53x, 54x, 55x, 56x, 57x, 58x, 59x, 5Ax, 5Bx, 5Cx, 5Dx, 8Mx, BSx, BUx, BWx

- 2847-CTO, 33x, 42x, 43x, 44x, 4Ax, 4Bx, 4Cx, 4Dx, 7Ax, 8Jx, 8Kx, 8Mx, 8Nx
- 2873-CTO
- 2874-CTO, 37x, 3Px, 3Qx, 3Rx, 3Sx, 4Cx, 6Wx, 6Zx, 72x, 73x
- 2875-CTO, 2Jx, 2Lx, 35x, 43x, 44x, 47x, 48x, 49x, 4Ax, 4Bx
- 2931-CTO
- 5072-CTO

Table 55. Parts list—Windows Vista Home Basic (32 bit) recovery DVDs

Language	P/N	CRU ID
English (for India)	58Y2604	*
English	58Y2606	
Russian	58Y2605	
Russian (English-enabled)	58Y3198	
Spanish	58Y3199	
Traditional Chinese	58Y2603	
Traditional Chinese (Hong Kong S.A.R.)	58Y3197	

- 0530-CTO
- 0553-CTO
- 0585-CTO
- 0591-CTO
- 4403-CTO
- 4404-CTO
- 2550-CTO
- 2597-CTO
- 2598-CTO
- 2599-CTO
- 4444-CTO
- 4447-CTO

Table 56. Parts list—Windows Vista Home Basic (32 bit) recovery DVDs

Language	P/N (with MS 2007)	P/N (with MS 2010)	CRU ID
English (for India)	76Y2408	03W7365	*
English	76Y2409	03W7366	

Windows Vista Home Premium (32 bit) DVDs

Windows Vista Home Premium (32 bit) is preinstalled as the operating system in the following models:
- 0616-CTO
- 2842-CTO, 3Dx, 4Hx, 4Kx, B4x, B5x, B6x, C5x, C6x, CRx, CVx, CYx, D3x, D6x, H4x
- 2847-CTO, 35x, 45x
- 2873-CTO
- 2874-CTO, 48x, 6Mx, 6Nx, 7Px, 7Qx
- 2875-CTO, 4Cx
- 2931-CTO
- 5072-CTO

Table 57. Parts list—Windows Vista Home Premium (32 bit) recovery DVDs

Language	P/N	CRU ID
English (for India)	58Y2599	*
English	58Y2602	
Korean	58Y2601	
Russian	58Y3193	
Russian (English-enabled)	58Y3192	
Simplified Chinese	58Y3191	
Spanish	58Y3194	
Traditional Chinese	58Y2598	
Traditional Chinese (Hong Kong S.A.R.)	58Y2600	

Windows 7 Home Basic (32 bit) DVDs

Windows 7 Home Basic (32 bit) is preinstalled as the operating system in the following models:

- 0616-CTO, 22x, 25x, 27x
- 2842-CTO, 3Fx, 3Gx, 3Rx, 66x, 67x, 68x, 69x, 6Ax, 6Bx, 6Cx, 6Dx, 6Ex, 6Fx, 6Gx, 6Hx, 6Jx, 6Kx, 6Lx, 6Mx, 6Px, 6Qx, 6Rx, 6Sx, 6Tx, 6Ux, 6Vx, 6Wx, 6Xx, 6Yx, 6Zx, 72x, 73x, 74x, 75x, 76x, 87x, 88x, 89x, 8Ax, 8Bx, 8Cx, 8Ex, 8Fx, 8Gx, 8Hx, 8Jx, 8Kx, 8Nx, 8Sx, 8Tx, 8Ux, 8Vx, 8Wx, 8Xx, 8Yx, 8Zx, 92x, 93x, 94x, 95x, 96x, 97x, 98x, 99x, 9Ax, 9Bx, 9Cx, 9Dx, 9Ex, 9Fx, 9Gx, 9Hx, 9Jx, 9Kx, 9Lx, 9Mx, 9Nx, 9Px, 9Qx, 9Rx, 9Sx, 9Tx, 9Ux, 9Vx, 9Wx, 9Xx, 9Yx, 9Zx, A2x, A3x, A4x, A5x, A6x, A7x, A8x, A9x, AAx, ABx, ACx, ADx, AEx, AFx, ANx, AQx, ASx, AUx, AWx, AYx, B2x, B3x, BGx, BHx, BJx, BKx, BMx, BTx, BXx, CGx, CHx, DNx, EBx, ECx, EDx, EEx, EFx, EGx, EHx, EJx, EKx, ELx, EMx, ENx, EPx, EQx, ERx, ESx, ETx, EUx, EVx, EWx, EXx, EYx, FSx, FTx, G2x, G3x, G7x, G8x, GEx, GFx, GJx, GNx, GPx, HQx, HSx, HTx, HUx, HVx, JLx, JQx, K6x, K8x, K9x, KAx, KBx, KCx, KDx, KFx, KHx, KJx, KKx, KLx, KMx, KNx, KPx, KQx, KRx, KSx, KTx, KUx
- 2847-CTO, 3Kx, 3Lx, 5Hx, 5Jx, 5Kx, 5Lx, 5Mx, 5Nx, 5Px, 5Qx, 5Rx, 5Sx, 5Tx, 5Ux, 5Vx, 5Wx, 5Xx, 5Yx, 5Zx, 62x, 63x, 64x, 65x, 66x, 67x, 7Bx, 7Cx, 7Fx, 8Dx, 8Ex, 8Fx, 8Gx, 8Hx, 8Lx, 8Ux, 8Vx, 8Yx, 9Mx, AGx, AHx, B5x, B6x, B7x, BAx, C3x, C4x, C5x, C6x, C7x, CAx, CBx, CCx, D6x, D7x, DCx, R2x, R3x, R4x, R5x, R6x, R7x, R8x, R9x, RAx, RBx, RCx, RDx, RFx, RGx, RHx, RJx, RKx, RLx, RMx, RNx, RPx, RQx, RRx, RSx, RTx, RUx, RVx, RWx, RXx
- 2873-CTO
- 2874-CTO, 34x, 35x, 3Lx, 4Mx, 4Nx, 4Px, 4Qx, 52x, 53x, 54x, 55x, 56x, 57x, 58x, 59x, 5Ax, 5Bx, 5Cx, 5Dx, 5Ex, 5Fx, 5Gx, 5Hx, 5Jx, 5Kx, 5Lx, 5Mx, 5Nx, 5Px, 5Qx, 5Rx, 6Ex, 6Gx, 6Jx, 6Lx, 6Rx, 6Sx, 7Ax, 7Dx, 7Fx, 7Gx, 7Hx, 7Jx, 7Kx, 7Lx, 7Mx, 7Nx, 7Sx, 7Tx, 7Vx, 7Wx, 7Xx, 7Yx, 7Zx, 86x, 89x, 8Cx, 8Dx, 8Ex
- 2875-CTO, 2Fx, 2Kx, 2Mx, 2Qx, 2Zx, 3Mx, 3Nx, 3Xx, 3Zx, 4Nx, 4Px, 4Qx, 4Rx, 4Sx, 4Ux, 5Bx, 5Hx, 5Kx, 5Mx, R2x, R3x, R4x, R5x, R6x, R7x, R8x, R9x, RAx, RBx, RCx, RDx, RFx, RGx, RHx, RJx
- 2931-CTO, 27x, 28x, 2Ax, 2Bx
- 5072-CTO

Table 58. Parts list—Windows 7 Home Basic (32 bit) recovery DVDs

Language	P/N (with MS 2007)	P/N (with MS 2010)	CRU ID
Brazilian Portuguese	03W7008	03W7693	*
English	03W7016	03W7701	
Russian	03W7012	03W7697	
Russian (English-enabled)	03W7011	03W7696	
Serbian-Latin	03W7014	03W7799	

Table 58. Parts list—Windows 7 Home Basic (32 bit) recovery DVDs (continued)

Language	P/N (with MS 2007)	P/N (with MS 2010)	CRU ID
Simplified Chinese	03W7009	03W7694	
Spanish	03W7013	03W7698	
Traditional Chinese (Hong Kong S.A.R.)	03W7010	03W7695	
Turkish	03W7015	03W7700	

- 0530-CTO, 5Ex, 5Fx, 5Vx, 5Wx, 5Xx, 6Hx, 6Jx, 6Kx
- 0553-CTO, 6Dx, 7Vx, 7Wx, 7Xx
- 0585-CTO
- 0591-CTO
- 4403-CTO, 3Ax, 3Bx, 3Ex, 3Fx, 3Jx, 3Kx, 3Nx, 3Px, 3Sx, 3Tx, 43x, 44x, 4Bx, 4Cx, 4Fx, 4Gx, 4Rx, 4Tx, 4Zx, 59x, 5Ax, 5Bx, 5Dx, 5Ex, 5Hx, 5Jx, 5Nx, 5Px, 5Tx, 5Ux, 5Xx, 5Yx, 62x, 6Dx, 6Ex, 6Fx, 6Gx, 6Nx, 6Px, 6Qx, 6Sx
- 4404-CTO, 3Xx, 3Yx, 43x, 46x, 47x, 49x, 4Ax, 4Dx, 4Ex, 4Gx, 4Jx, 4Mx, 4Qx, 4Rx, 4Sx, 4Ux
- 2550-CTO
- 2597-CTO, 5Dx, 5Ex
- 2598-CTO
- 2599-CTO
- 4444-CTO, 3Ex, 3Fx, 42x, 47x
- 4447-CTO

Table 59. Parts list—Windows 7 Home Basic (32 bit) recovery DVDs

Language	P/N (with MS 2007)	P/N (with MS 2010)	CRU ID
Brazilian Portuguese	76Y2501	03W7292	*
English (for India)	76Y2503	03W7294	
English	76Y2509	03W7300	
Russian	76Y2505	03W7296	
Russian (English-enabled)	76Y2504	03W7295	
Serbian-Latin	76Y2507	03W7796	
Simplified Chinese	76Y2502	03W7293	
Spanish	76Y2506	03W7297	
Turkish	76Y2508	03W7299	

Windows 7 Home Premium (32 bit) DVDs

Windows 7 Home Premium (32 bit) is preinstalled as the operating system in the following models:

- 0616-CTO
- 2842-CTO, 29x, 2Ex, 46x, 5Lx, 5Mx, 5Qx, 5Sx, 5Yx, 62x, BNx, BPx, BQx, BZx, C2x, C3x, C4x, C7x, CAx, CNx, D8x, D9x, DAx, DBx, DCx, DEx, DFx, EZx, FDx, FGx, FKx, GDx, GLx, GMx, GSx, GTx, GUx, GVx, H7x, H8x, H9x, HDx, HFx, HGx, HRx, HWx, JZx
- 2847-CTO, 2Zx, 3Mx, 3Qx, 4Jx, 6Sx, 6Ux, 6Vx, 6Wx, 6Xx, 6Yx, 6Zx, 7Dx, 7Ex, 7Kx, 7Wx, 7Xx, 7Yx, 7Zx, 82x, 83x, 8Wx, 8Xx, 8Zx, 9Jx, 9Nx, 9Px, 9Rx, A7x, ABx, ACx, ADx, AJx, AKx, ALx, AQx, ARx, ASx, AVx, AWx, AXx, B3x, B8x, B9x, BPx, C8x, CDx, CEx, CFx, Q2x
- 2873-CTO
- 2874-CTO, 3Ex, 3Mx, 4Gx, 4Kx, 62x, 63x, 64x, 65x, 66x, 68x, 69x, 6Bx
- 2875-CTO, 25x, 26x, 27x, 28x, 2Ax, 2Bx, 2Cx, 3Yx, 4Tx, 4Vx, 4Wx, 4Xx, 56x, 57x, 5Ax, 5Gx
- 2931-CTO

- 5072-CTO

Table 60. Parts list—Windows 7 Home Premium (32 bit) recovery DVDs

Language	P/N (with MS 2007)	P/N (with MS 2010)	CRU ID
Brazilian Portuguese	03W7017	03W7702	*
English	03W7028	03W7712	
Japanese	03W7791	N/A	
Korean	03W7022	03W7706	
Russian	03W7024	03W7708	
Russian (English-enabled)	03W7023	03W7707	
Serbian-Latin	03W7026	03W7800	
Simplified Chinese	03W7018	03W7703	
Spanish	03W7025	03W7709	
Traditional Chinese	03W7019	03W7704	
Traditional Chinese (Hong Kong S.A.R.)	03W7020	03W7705	
Turkish	03W7027	03W7711	

- 0530-CTO, 5Kx, 5Mx, 5Qx, 5Tx, 6Bx, 6Dx
- 0553-CTO, 62x, 65x, 68x, 7Nx, 7Qx
- 0585-CTO
- 0591-CTO
- 4403-CTO, 55x
- 4404-CTO
- 2550-CTO
- 2597-CTO, 5Hx, 5Lx, 5Px, 5Sx, 6Ex, 6Gx
- 2598-CTO, 68x, 6Bx, 6Ex, 7Gx, 7Jx
- 2599-CTO
- 4444-CTO
- 4447-CTO

Table 61. Parts list—Windows 7 Home Premium (32 bit) recovery DVDs

Language	P/N (with MS 2007)	P/N (with MS 2010)	CRU ID
Brazilian Portuguese	76Y2510	03W7301	*
Danish	76Y2513	03W7304	
English	76Y2525	03W7312	
English (for India)	76Y2514	03W7305	
English, Finnish, and Swedish (in Sweden)	76Y2527	03W7314	
English, French, German, and Dutch (in Belgium and Luxemburg)	76Y2526	03W7313	
English, French, German, and Italian (in Switzerland)	76Y2528	03W7315	
French	76Y2515	03W7306	
German	76Y2516	03W7307	
Hebrew	76Y2517	03W7308	
Japanese	03W7609	N/A	
Korean	76Y2520	03W7310	

Table 61. Parts list—Windows 7 Home Premium (32 bit) recovery DVDs (continued)

Language	P/N (with MS 2007)	P/N (with MS 2010)	CRU ID
Simplified Chinese	76Y2511	03W7302	
Spanish	76Y2524	03W7311	
Traditional Chinese	76Y2512	03W7303	
Traditional Chinese (Hong Kong S.A.R.)	76Y2518	03W7309	

Windows 7 Home Premium (64 bit) DVDs

Windows 7 Home Premium (64 bit) is preinstalled as the operating system in the following models:

- 0616-CTO
- 2842-CTO, B7x, B8x, BAx, BBx, DMx
- 2847-CTO, 2Lx, 2Rx, 58x, 59x, 7Jx, 7Px, 7Qx, 7Ux, 7Vx, 84x, 85x, 87x, 88x, 97x, 98x, 9Ex, 9Vx, AZx, BJx, BKx, BTx, BUx, BWx, CLx, CWx, DAx, DFx, DGx, DJx, DKx, Q9x, QAx
- 2873-CTO
- 2874-CTO, 32x, 78x, 7Rx, 7Ux, 87x, 88x
- 2875-CTO, 2Nx, 2Rx, 32x, 4Yx
- 2931-CTO
- 5072-CTO

Table 62. Parts list—Windows 7 Home Premium (64 bit) recovery DVDs

Language	P/N (with MS 2007)	P/N (with MS 2010)	CRU ID
Czech	03W7088	03W7770	*
Danish	03W7089	03W7771	
English	03W7106	03W7787	
English, Finnish, and Swedish (in Sweden)	03W7108	03W7789	
English, French, German, and Dutch (in Belgium and Luxemburg)	03W7107	03W7788	
English, French, German, and Italian (in Switzerland)	03W7109	03W7790	
French	03W7090	03W7772	
German	03W7092	03W7774	
Greek	03W7091	03W7773	
Hebrew	03W7093	03W7775	
Hungarian	03W7094	03W7776	
Italian	03W7095	03W7777	
Japanese	03W7794	N/A	
Korean	03W7097	03W7778	
Polish	03W7098	03W7779	
Portuguese	03W7099	03W7780	
Romanian	03W7100	03W7781	
Serbian-Latin	03W7104	03W7803	
Simplified Chinese	03W7087	03W7769	
Slovak	03W7101	03W7782	

Table 62. Parts list—Windows 7 Home Premium (64 bit) recovery DVDs (continued)

Language	P/N (with MS 2007)	P/N (with MS 2010)	CRU ID
Slovenian	03W7102	03W7783	
Spanish	03W7103	03W7784	
Turkish	03W7105	03W7786	

- 0530-CTO, 59x, 5Ax, 5Bx, 5Cx, 5Dx
- 0553-CTO
- 0585-CTO, 53x
- 0591-CTO
- 4403-CTO, 3Wx, 3Xx, 3Yx, 3Zx, 42x, 46x, 47x, 48x, 49x, 4Ax, 4Nx, 4Px, 4Ux, 4Vx, 4Wx, 4Xx, 4Yx, 6Lx, 6Mx
- 4404-CTO
- 2550-CTO
- 2597-CTO, 58x, 59x, 5Ax, 5Bx, 5Cx
- 2598-CTO
- 2599-CTO
- 4444-CTO, 39x, 3Ax, 3Bx, 3Cx, 3Dx, 3Hx, 3Jx, 3Kx, 3Lx, 3Vx, 3Wx, 43x, 44x, 45x, 46x, 4Rx, 4Sx, 4Tx, 4Ux, 5Dx, 5Ex
- 4447-CTO

Table 63. Parts list—Windows 7 Home Premium (64 bit) recovery DVDs

Language	P/N (with MS 2007)	P/N (with MS 2010)	CRU ID
Czech	76Y2581	03W7347	*
English	76Y2589	03W7360	
English (for India)	76Y2582	03W7348	
French	N/A	03W7612	
Greek	76Y2776	03W7349	
Hungarian	76Y2777	03W7351	
Japanese	03W7611	N/A	
Portuguese	76Y2779	03W7353	
Polish	76Y2778	03W7352	
Romanian	76Y2781	03W7355	
Russian	76Y2782	03W7356	
Russian (English-enabled)	76Y2780	03W7354	
Slovak	76Y2783	03W7357	
Slovenian	76Y2784	03W7358	
Simplified Chinese	76Y2580	03W7346	
Traditional Chinese (Hong Kong S.A.R.)	76Y2585	03W7350	
Turkish	76Y2588	03W7359	

Windows 7 Professional (32 bit) DVDs

Windows 7 Professional (32 bit) is preinstalled as the operating system in the following models:

- 0616-CTO, 26x, 28x, 29x

- 2842-CTO, 23x, 24x, 25x, 26x, 27x, 28x, 2Ax, 2Bx, 2Cx, 2Dx, 33x, 3Hx, 3Sx, 3Tx, 3Ux, 3Vx, 5Ex, 5Fx, 5Gx, 5Hx, 5Jx, 5Kx, 5Nx, 5Px, 5Rx, 5Tx, 5Ux, 5Vx, 5Wx, 5Xx, 5Zx, 63x, 64x, 65x, 6Nx, 77x, 78x, 7Bx, 7Cx, 7Dx, 7Ex, 7Fx, 7Gx, 7Hx, 7Jx, 7Qx, 7Tx, 7Ux, 7Vx, 8Dx, 8Lx, 8Rx, AGx, AHx, AJx, AKx, ALx, CCx, CDx, CEx, CFx, CJx, CKx, CLx, CMx, CPx, CSx, CWx, CZx, D4x, DDx, DGx, DHx, DJx, DKx, DQx, DSx, DUx, DWx, DYx, DZx, E2x, E3x, E4x, E6x, F2x, F3x, F4x, F5x, F6x, F7x, F8x, FEx, FHx, FLx, FMx, FPx, GBx, GCx, GHx, GKx, GWx, GZx, H3x, H5x, HCx, HLx, HNx, HPx, HXx, HYx, HZx, J2x, J3x, J4x, JKx, JPx, JTx, JUx, K2x, KVx, KYx
- 2847-CTO, 24x, 25x, 26x, 27x, 28x, 29x, 2Ax, 2Bx, 2Cx, 2Dx, 2Ex, 2Fx, 2Gx, 2Hx, 2Jx, 2Kx, 2Mx, 2Nx, 2Px, 2Sx, 2Tx, 2Ux, 2Vx, 2Wx, 2Xx, 2Yx, 3Nx, 3Px, 3Vx, 3Wx, 3Xx, 3Yx, 3Zx, 4Nx, 4Px, 4Qx, 4Rx, 4Sx, 4Tx, 4Ux, 4Vx, 4Wx, 4Xx, 4Yx, 4Zx, 52x, 53x, 54x, 55x, 56x, 57x, 5Ax, 5Bx, 5Cx, 5Dx, 5Ex, 5Fx, 5Gx, 68x, 69x, 6Ax, 6Bx, 6Cx, 6Dx, 6Ex, 6Fx, 6Gx, 6Hx, 6Jx, 6Kx, 6Px, 6Rx, 6Tx, 7Lx, 7Nx, 7Rx, 7Sx, 92x, 93x, 94x, 95x, 96x, 9Bx, 9Cx, 9Qx, 9Sx, 9Tx, 9Ux, 9Wx, 9Xx, 9Zx, A2x, A3x, A4x, AFx, B2x, BCx, BDx, BEx, BFx, BGx, BHx, BMx, BQx, BRx, BXx, BZx, C9x, CNx, CPx, CQx, CRx, CSx, D3x, D9x, DBx, Q3x, Q4x, Q5x, Q6x, Q7x, Q8x, QBx, QCx, QDx, QEx, QFx, QGx, QHx, QJx
- 2873-CTO, 33x
- 2874-CTO, 3Gx, 4Hx, 4Jx, 4Lx, 75x, 76x
- 2875-CTO, 23x, 24x, 2Tx, 3Px, 3Wx, 4Dx, 4Ex, 4Fx, 4Gx, 4Hx, 4Jx, 4Kx, 4Lx, 52x, 53x, 54x, 55x, 5Px, 5Qx, 5Rx, 5Sx
- 2931-CTO, 26x, 29x
- 5072-CTO

Table 64. Parts list—Windows 7 Professional (32 bit) recovery DVDs

Language	P/N (with MS 2007)	P/N (with MS 2010)	CRU ID
Brazilian Portuguese	03W7029	03W7713	*
Czech	03W7032	03W7716	
Danish	03W7033	03W7717	
English	03W7054	03W7737	
English, Finnish, and Swedish (in Sweden)	03W7056	03W7739	
English, French, German, and Dutch (in Belgium and Luxemburg)	03W7055	03W7738	
English, French, German, and Italian (in Switzerland)	03W7057	03W7740	
French	03W7034	03W7718	
German	03W7036	03W7720	
Greek	03W7035	03W7719	
Hebrew	03W7037	03W7721	
Hungarian	03W7039	03W7723	
Italian	03W7040	03W7724	
Japanese	03W7792	N/A	
Korean	03W7042	03W7725	
Norwegian	03W7043	03W7726	
Polish	03W7044	03W7727	
Portuguese	03W7045	03W7728	
Romanian	03W7047	03W7730	
Russian	03W7048	03W7731	
Russian (English-enabled)	03W7046	03W7729	
Serbian-Latin	03W7052	03W7801	

Table 64. Parts list—Windows 7 Professional (32 bit) recovery DVDs (continued)

Language	P/N (with MS 2007)	P/N (with MS 2010)	CRU ID
Simplified Chinese	03W7030	03W7714	
Slovak	03W7049	03W7732	
Slovenian	03W7050	03W7733	
Spanish	03W7051	03W7734	
Traditional Chinese	03W7031	03W7715	
Traditional Chinese (Hong Kong S.A.R.)	03W7038	03W7722	
Turkish	03W7053	03W7736	

- 0530-CTO
- 0553-CTO, 22x, 24x, 25x, 33x, 35x, 42x, 43x, 44x, 52x, 53x, 54x, 55x, 56x, 57x, 58x, 59x, 5Ax, 5Bx, 5Cx, 5Dx, 5Hx, 5Jx, 5Kx, 5Lx, 5Mx, 5Nx, 5Px, 5Qx, 5Rx, 5Tx, 5Ux, 5Vx, 5Wx, 5Xx, 5Yx, 63x, 66x, 69x, 6Bx, 6Cx, 6Hx, 6Jx, 6Kx, 6Mx, 6Nx, 6Px, 6Qx, 6Rx, 6Sx, 6Tx, 6Ux, 6Vx, 6Wx, 74x, 7Bx, 7Cx, 7Dx, 7Ex, 7Jx, 7Mx, 7Px, 7Sx, 7Ux, 89x, 8Dx, 8Ex, R2x, R3x
- 0585-CTO, 42x, 43x, 44x, 52x, 54x, 55x, 57x, 58x, 59x, 5Ax, 5Bx, 5Fx, 5Kx, 5Px, 5Tx, 5Yx, 64x, 67x, 68x, 69x, 6Cx, 6Dx, 6Gx, 6Hx, 6Px, 6Qx, 6Rx, 6Sx, 6Tx, 6Ux, 74x, 77x
- 0591-CTO, 52x, 53x
- 4403-CTO, 32x, 35x, 36x, 3Cx, 3Dx, 3Gx, 3Hx, 3Lx, 3Mx, 3Qx, 3Rx, 3Ux, 3Vx, 4Dx, 4Ex, 4Hx, 4Jx, 56x, 57x, 5Cx, 5Fx, 5Gx, 5Kx, 5Lx, 5Mx, 5Qx, 5Rx, 5Sx, 5Vx, 5Wx, 5Zx, 63x, 68x, 6Rx, 6Tx, 6Ux, 6Vx, 6Wx, 6Xx
- 4404-CTO, 36x, 38x, 3Ax, 3Cx, 3Ex, 3Mx, 3Nx, 3Rx, 3Sx, 3Vx, 3Wx, 3Zx, 42x, 44x, 45x, 48x, 4Bx, 4Cx, 4Fx, 4Hx, 4Kx, 4Nx, 4Tx, 4Vx, 4Wx, 4Xx, 4Yx, 4Zx
- 2550-CTO, 42x, 43x, 44x, 52x, 53x, 54x, 55x, 57x, 58x, 59x, 5Ax, 5Bx, 5Fx, 5Kx, 5Px, 5Tx, 5Xx, 5Yx, 66x, 67x, 68x, 69x, 6Ax
- 2597-CTO, 22x, 32x, 52x, 53x, 54x, 55x, 56x, 5Jx, 5Mx, 5Qx, 5Rx, 5Tx, 5Xx, 5Yx, 62x, 64x, 65x, 6Ax, 6Bx, 6Dx, 6Fx, 6Hx
- 2598-CTO, 22x, 24x, 25x, 33x, 34x, 42x, 43x, 44x, 52x, 53x, 54x, 55x, 56x, 5Ax, 5Bx, 5Cx, 5Dx, 5Ex, 5Fx, 5Gx, 5Hx, 5Jx, 5Kx, 5Lx, 5Mx, 5Nx, 5Px, 5Qx, 5Rx, 5Sx, 5Vx, 5Wx, 5Xx, 5Yx, 5Zx, 62x, 65x, 66x, 69x, 6Cx, 6Fx, 6Gx, 6Jx, 6Kx, 6Lx, 6Px, 6Qx, 6Rx, 73x, 74x, 75x, 76x, 77x, 7Ex, 7Fx, 7Hx, 7Kx, R2x, R3x
- 2599-CTO, 52x, 53x
- 4444-CTO, 32x, 35x, 49x, 4Ax, 59x, 5Ax
- 4447-CTO, 32x, 34x, 36x, 38x, 3Ax, 3Cx, 3Ex, 7Lx, 7Mx, 7Nx, 7Px

Table 65. Parts list—Windows 7 Professional (32 bit) recovery DVDs

Language	P/N (with MS 2007)	P/N (with MS 2010)	CRU ID
Brazilian Portuguese	76Y2411	03W7275	
Danish	76Y2415	03W7278	
English	76Y2437	03W7288	
English (for India)	76Y2416	03W7279	
English, Finnish, and Swedish (in Sweden)	76Y2439	03W7290	
English, French, German, and Dutch (in Belgium and Luxemburg)	76Y2438	03W7289	
English, French, German, and Italian (in Switzerland)	76Y2440	03W7291	
French	76Y2417	03W7280	
German	76Y2419	03W7281	
Hebrew	76Y2420	03W7282	
Italian	76Y2423	03W7284	

Table 65. Parts list—Windows 7 Professional (32 bit) recovery DVDs (continued)

Language	P/N (with MS 2007)	P/N (with MS 2010)	CRU ID
Japanese	03W7608	N/A	
Korean	76Y2425	03W7285	
Norwegian	76Y2426	03W7286	
Simplified Chinese	76Y2412	03W7276	
Spanish	76Y2434	03W7287	
Traditional Chinese	76Y2413	03W7277	
Traditional Chinese (Hong Kong S.A.R.)	76Y2421	03W7283	

Windows 7 Professional (64 bit) DVDs

Windows 7 Professional (64 bit) is preinstalled as the operating system in the following models:

- 0616-CTO
- 2842-CTO, 7Px, C8x, CBx, F9x, FAx, FBx, JNx, JSx, JXx, K3x, K4x, KXx
- 2847-CTO, 2Qx, 6Nx, 6Qx, 72x, 9Yx, BYx, C2x, CVx, CYx, CZx, D2x, D8x, DHx
- 2873-CTO
- 2874-CTO
- 2875-CTO
- 2931-CTO
- 5072-CTO

Table 66. Parts list—Windows 7 Professional (64 bit) recovery DVDs

Language	P/N (with MS 2007)	P/N (with MS 2010)	CRU ID
Brazilian Portuguese	03W7058	03W7741	*
Czech	03W7061	03W7744	
Danish	03W7062	03W7745	
English	03W7083	03W7765	
English, Finnish, and Swedish (in Sweden)	03W7085	03W7767	
English, French, German, and Dutch (in Belgium and Luxemburg)	03W7084	03W7766	
English, French, German, and Italian (in Switzerland)	03W7086	03W7768	
French	03W7063	03W7746	
German	03W7065	03W7748	
Greek	03W7064	03W7747	
Hebrew	03W7066	03W7749	
Hungarian	03W7068	03W7751	
Japanese	03W7793	N/A	
Italian	03W7069	03W7752	
Korean	03W7071	03W7753	
Norwegian	03W7072	03W7754	
Polish	03W7073	03W7755	
Portuguese	03W7074	03W7756	

Table 66. Parts list—Windows 7 Professional (64 bit) recovery DVDs (continued)

Language	P/N (with MS 2007)	P/N (with MS 2010)	CRU ID
Romanian	03W7076	03W7758	
Russian	03W7077	03W7759	
Russian (English-enabled)	03W7075	03W7757	
Serbian-Latin	03W7081	03W7802	
Simplified Chinese	03W7059	03W7742	
Slovak	03W7078	03W7760	
Slovenian	03W7079	03W7761	
Spanish	03W7080	03W7762	
Traditional Chinese	03W7060	03W7743	
Traditional Chinese (Hong Kong S.A.R.)	03W7067	03W7750	
Turkish	03W7082	03W7764	

- 0530-CTO, 5Zx, 65x, 67x, 6Gx, 6Lx, 6Mx
- 0553-CTO, 36x, 5Ex, 5Fx, 5Gx, 6Xx, 6Yx, 6Zx, 72x, 73x, 75x, 76x, 77x, 78x, 79x, 7Ax, 7Fx, 7Gx, 7Hx, 7Kx, 7Lx, 7Yx, 7Zx, 82x, 83x, 84x, 85x, 86x, 87x, 88x, 8Ax, 8Bx, 8Cx
- 0585-CTO, 56x, 65x, 66x, 6Xx, 6Yx, 6Zx, 75x, 76x
- 0591-CTO
- 4403-CTO, 33x, 34x, 37x, 38x, 39x, 4Kx, 4Lx, 4Mx, 53x, 54x, 58x, 64x, 65x, 66x, 67x, 69x, 6Ax, 6Bx, 6Cx, 6Hx, 6Jx, 6Kx, 6Yx, 6Zx, 72x, 73x, 74x, 75x, 76x
- 4404-CTO, 32x, 33x, 34x, 35x, 3Gx, 3Hx, 3Jx, 3Kx, 3Lx, 4Lx, 4Px
- 2550-CTO, 5Zx, 62x, 6Nx, 6Sx, 6Tx, 6Ux
- 2597-CTO, 5Vx, 5Wx, 5Zx, 63x, 66x, 67x, 68x, 69x, 6Cx, 6Nx, 6Px, 6Qx
- 2598-CTO, 35x, 57x, 58x, 59x, 5Tx, 6Nx, 6Sx, 6Tx, 6Ux, 6Vx, 6Wx, 6Xx, 6Yx, 6Zx, 72x, 78x, 79x, 7Ax, 7Bx, 7Cx, 7Dx, 7Qx, 7Rx, 7Sx, 7Tx, 7Ux, 7Vx, 7Wx, 7Xx, 7Yx, 7Zx, 82x, 83x, 84x, 85x
- 2599-CTO
- 4444-CTO, 33x, 34x, 36x, 37x, 38x, 3Mx, 3Nx, 3Px, 3Qx, 3Rx, 3Sx, 3Tx, 3Ux, 3Zx, 4Bx, 4Cx, 4Dx, 4Ex, 4Fx, 4Gx, 4Hx, 4Jx, 4Kx, 4Lx, 4Mx, 4Nx, 4Px, 4Qx, 4Vx, 4Wx, 4Xx, 4Yx, 4Zx, 52x, 53x, 54x, 55x, 56x, 57x, 58x, 5Bx, 5Cx
- 4447-CTO, 33x, 3Fx, 3Gx, 3Hx

Table 67. Parts list—Windows 7 Professional (64 bit) recovery DVDs

Language	P/N (with MS 2007)	P/N (with MS 2010)	CRU ID
Czech	76Y2739	03W7320	
Danish	76Y2534	03W7321	
English	76Y2546	03W7342	
English (for India)	76Y2535	03W7322	
English, Finnish, and Swedish (in Sweden)	76Y2751	03W7344	
English, French, German, and Dutch (in Belgium and Luxemburg)	76Y2750	03W7343	
English, French, German, and Italian (in Switzerland)	76Y2547	03W7345	
French	76Y2536	03W7655	
German	76Y2537	03W7325	
Greek	76Y2740	03W7324	

Table 67. Parts list—Windows 7 Professional (64 bit) recovery DVDs (continued)

Language	P/N (with MS 2007)	P/N (with MS 2010)	CRU ID
Hebrew	76Y2538	03W7326	
Hungarian	76Y2741	03W7328	
Italian	76Y2540	03W7329	
Korean	76Y2542	03W7330	
Norwegian	76Y2742	03W7331	
Portuguese	76Y2743	03W7333	
Polish	76Y2543	03W7332	
Romanian	76Y2745	03W7335	
Russian	76Y2746	03W7336	
Russian (English-enabled)	76Y2744	03W7334	
Serbian-Latin	76Y2749	03W7797	
Slovak	76Y2747	03W7337	
Slovenian	76Y2748	03W7338	
Simplified Chinese	76Y2532	03W7318	
Spanish	76Y2544	03W7339	
Traditional Chinese	76Y2533	03W7319	
Traditional Chinese (Hong Kong S.A.R.)	76Y2539	03W7327	
Turkish	76Y2545	03W7341	

Windows 7 Starter (32 bit) DVDs

Windows 7 Starter (32 bit) is preinstalled as the operating system in the following models:

- 0616-CTO
- 2842-CTO
- 2847-CTO
- 2873-CTO
- 2874-CTO
- 2875-CTO
- 2931-CTO
- 5072-CTO

Table 68. Parts list—Windows 7 Starter (32 bit) recovery DVDs

Language	P/N	CRU ID
English	03W7798	*

- 0530-CTO
- 0553-CTO
- 0585-CTO
- 0591-CTO
- 4403-CTO
- 4404-CTO
- 2550-CTO
- 2597-CTO
- 2598-CTO

- 2599-CTO
- 4444-CTO
- 4447-CTO

Table 69. Parts list—Windows 7 Starter (32 bit) recovery DVDs

Language	P/N	CRU ID
English	03W7656	*

Common service tools

Table 70. Parts list—Common service tools

Tool	P/N
Screwdriver kit	95F3598
1/4" drive spinner handle	1650840
1/4" Sq. to 1/4" hex torx adapter	93F2838
TR7-TR-10 tamper resistant torx bits	00P6967
Removal tool antenna RF connector	08K7159
USB 2.0 CD-RW/DVD-ROM combo drive II	40Y8687
USB cable	40Y8704
USB floppy diskette drive for maintenance diskette	05K9283
USB floppy diskette drive tool kit	27L3452
Test card for integrated Smart Card	42W7820
LENOVO ThinkPad Hardware Maintenance Diskette Version 1.76 or later **Note:** Download the file from the Web site http://www.lenovo.com/spm	—

Appendix A. Notices

Lenovo may not offer the products, services, or features discussed in this document in all countries. Consult your local Lenovo representative for information on the products and services currently available in your area. Any reference to a Lenovo product, program, or service is not intended to state or imply that only that Lenovo product, program, or service may be used. Any functionally equivalent product, program, or service that does not infringe any Lenovo intellectual property right may be used instead. However, it is the user's responsibility to evaluate and verify the operation of any other product, program, or service.

Lenovo may have patents or pending patent applications covering subject matter described in this document. The furnishing of this document does not give you any license to these patents. You can send license inquiries, in writing, to:

Lenovo (United States), Inc.
1009 Think Place - Building One
Morrisville, NC 27560
U.S.A.
Attention: Lenovo Director of Licensing

LENOVO PROVIDES THIS PUBLICATION "AS IS" WITHOUT WARRANTY OF ANY KIND, EITHER EXPRESS OR IMPLIED, INCLUDING, BUT NOT LIMITED TO, THE IMPLIED WARRANTIES OF NON-INFRINGEMENT, MERCHANTABILITY OR FITNESS FOR A PARTICULAR PURPOSE. Some jurisdictions do not allow disclaimer of express or implied warranties in certain transactions, therefore, this statement may not apply to you.

This information could include technical inaccuracies or typographical errors. Changes are periodically made to the information herein; these changes will be incorporated in new editions of the publication. Lenovo may make improvements and/or changes in the product(s) and/or the program(s) described in this publication at any time without notice.

The products described in this document are not intended for use in implantation or other life support applications where malfunction may result in injury or death to persons. The information contained in this document does not affect or change Lenovo product specifications or warranties. Nothing in this document shall operate as an express or implied license or indemnity under the intellectual property rights of Lenovo or third parties. All information contained in this document was obtained in specific environments and is presented as an illustration. The result obtained in other operating environments may vary.

Lenovo may use or distribute any of the information you supply in any way it believes appropriate without incurring any obligation to you.

Any references in this publication to non-Lenovo Web sites are provided for convenience only and do not in any manner serve as an endorsement of those Web sites. The materials at those Web sites are not part of the materials for this Lenovo product, and use of those Web sites is at your own risk.

Any performance data contained herein was determined in a controlled environment. Therefore, the result obtained in other operating environments may vary significantly. Some measurements may have been made on development-level systems and there is no guarantee that these measurements will be the same on generally available systems. Furthermore, some measurements may have been estimated through extrapolation. Actual results may vary. Users of this document should verify the applicable data for their specific environment.

© Copyright Lenovo 2009, 2011

European Union - Compliance to the Electromagnetic Compatibility Directive

This product is in conformity with the protection requirements of EU Council Directive 2004/108/EC on the approximation of the laws of the Member States relating to electromagnetic compatibility. Lenovo cannot accept responsibility for any failure to satisfy the protection requirements resulting from a nonrecommended modification of the product, including the installation of option cards from other manufacturers.

This product has been tested and found to comply with the limits for Class B Information Technology Equipment according to European Standard EN 55022. The limits for Class B equipment were derived for typical residential environments to provide reasonable protection against interference with licensed communication devices.

Trademarks

The following terms are trademarks of Lenovo in the United States, other countries or both:

Lenovo
Rescue and Recovery
ThinkPad
ThinkVantage
TrackPoint
Ultrabay
UltraNav

IBM (used under license) is trademark of the International Business Machines Corporation in the United States, other countries, or both:

The following terms are trademarks of Microsoft Corporation in the United States, other countries, or both:

Microsoft
Windows
Windows Vista

The following are trademarks of Intel Corporation or its subsidiaries in the United States, other countries, or both:

Intel
Intel Celeron
Intel Core™ 2 Duo

Other company, product, or service names may be the trademarks or service marks of others.

ThinkPad®

Part Number: 60Y3635_02

Printed in China

(1P) P/N: 60Y3635_02