Lenovo IdeaPad Y460

User Guide

lenovo

ideapad

Notes

- Before using this information and the product it supports, be sure to read Important safety information on page iii and Notices in Appendix E first.
- Some instructions in this guide may assume that you are using Windows® 7. If you are using other Windows operating system, some operations may be slightly different. If you are using other operating systems, some operations may not apply to you, but it won't substantially affect your use of this computer.
- The features described in this guide are common to most models. Some features may not be available on your computer and/or your computer may include features that are not described in this user guide.

First Edition (Jan. 2010)

© Copyright Lenovo 2010.

LENOVO products, data, computer software, and services have been developed exclusively at private expense and are sold to governmental entities as commercial items as defined by 48 C.F.R. 2.101 with limited and restricted rights to use, reproduction and disclosure. LIMITED AND RESTRICTED RIGHTS NOTICE: If products, data, computer software, or services are delivered pursuant a General Services Administration "GSA" contract, use, reproduction, or disclosure is subject to restrictions set forth in Contract No. GS-35F-05925.

Respective Users

Dear user,
Thank you for purchasing your new Lenovo notebook computer!
Before using this product, make sure to read this user guide carefully.

We are pleased that you have chosen Lenovo for your mobile computing needs. To help you master the usage of your new computer quickly, we have prepared this user guide. In this manual you will find information on the system configuration, basic operating instructions, and important notices. We have done our best to avoid any errors in making sure that the information provided in this manual is accurate and reliable. However, due to the short length of the user guide it is impossible to cover all topics in great depth. For this reason, we apologize for any omissions you might find.

Lenovo is always trying to improve the performance and reliability of its products. For that reason, the hardware and software components shown within the user guide might not perfectly match those of your system. However, any inconsistencies between what is described in the user guide and the operations of your computer should not substantially affect your use. Lenovo apologizes for any inconvenience that this issue might cause.

Thank you for your cooperation.

Explanation of hard disk capacity

Dear user,
While using your computer, you may find that the nominal hard disk capacity indicated is somewhat different from the disk capacity displayed by the operating system. For example, a nominal 40GB hard disk will appear as less than 40GB in the operating system. This discrepancy is not an error in hard disk installation nor any other problem, but a normal phenomenon of computers. This phenomenon is primarily due to the following reasons:

I. Different standards used by the manufacturer and operating system when calculating hard disk capacity

Hard disk manufacturers use a radix of 1000, i.e., 1G = 1,000MB, 1MB = 1,000KB, 1KB = 1,000 bytes. However, when identifying hard disk capacity, operating systems use a radix of 1024, i.e., 1GB = 1,024MB, 1MB = 1,024KB, 1KB = 1,024 bytes. The standard adopted by your computer is that of the hard disk manufacturers. Since the standards adopted by the hard disk manufacturer and operating system are different, the hard disk capacity displayed by the operating system will be different from the nominal hard disk capacity.

For example, if the hard disk is nominally X G, even when it is completely empty, the capacity displayed by the operating system will be:
$X \times 1000 \times 1000 \times 1000 / (1024 \times 1024 \times 1024) \approx X \times 0.931$ G

In addition, if a portion of the hard disk space has been used for some specific purpose, then the capacity indicated by the operating system will be even less than X × 0.931 G.

II. A portion of the hard disk space is used for specific purposes

Lenovo computers may come with preinstalled OneKey Rescue System, so the hard disk has a special portion partitioned before delivery, which is used to store hard disk mirror and OneKey Rescue System program files. The size of the reserved space for this partition varies according to the model, operating system and software of the computer. For the sake of safety, this partition is not apparent, which is commonly referred to as a "hidden partition".

In addition, after the hard disk is partitioned or formatted, the system will assign a certain amount of hard disk space for the system files.

For the above reasons, the available hard disk space indicated by the operating system is always less than the computer's nominal hard disk capacity.

Contents

Important safety information..... iii
Important safety information....iii

Chapter 1. Getting to know your computer 1
Top view 1
Left-side view 4
Right-side view 5
Front view 7
Bottom view 8

Chapter 2. Learning the basics 10
First use..... 10
Using AC adapter and battery 13
Using the touchpad..... 16
Using the keyboard..... 19
Special keys and buttons..... 22
System status indicators..... 25
Securing your computer..... 26
Connecting external devices..... 28
Using Switchable Graphics (specific models only)..... 31

Chapter 3. Using the Internet 32
Wired connection 32
Wireless connection 34

Chapter 4. OneKey Rescue System 40
OneKey Rescue System 40

Chapter 5. Troubleshooting 43
Frequently Asked Questions 43
Troubleshooting 46

Chapter 6. Upgrading and replacing devices 55
Replacing the battery 55
Replacing memory..... 57
Replacing the hard disk drive ... 61

Appendix A. Getting help and service.....66
Getting help on the Web 67
Calling the customer support center 67
Getting help around the world 70
Lenovo warranty service telephone numbers..... 70

Appendix B. Use and care information 71
Caring for your computer 71
Accessibility and comfort..... 78
Maintenance 80

Appendix C. Lenovo limited warranty 85
Warranty information 95

Appendix D. Customer replaceable units (CRUs) 99

Appendix E. Notices 101
Notices 101
ENERGY STAR model information 104
Wireless related information ... 106
Electronic emissions notices ... 110
WEEE and recycling statements 117
Turkish statement of compliance 117
EU WEEE statements 118
Japan recycling statements 119
Notice for users in the U.S.A. .. 121
Notice on deleting data from your hard disk 121

Appendix F. Features and Specifications 123

Trademarks 125

Index 126

Important safety information

This information can help you safely use your notebook personal computer. Follow and retain all information included with your computer. The information in this document does not alter the terms of your purchase agreement or the Lenovo Limited Warranty. For more information, see "Appendix C. Lenovo limited warranty" on page 85.

Read this first

Personal computers are electronic devices. Power cords, power adapters, and other features can create potential safety risks that can result in physical injury or property damage, especially if misused.
The safety risks are categorized as follows:

Danger:
Physical injury or even death may be caused.

Attention:
Property damage or even minor injury may be caused.

To protect yourself from hazards and create a safer computer work environment, follow the instructions hereafter.

Unpack

Inspect the covers of the computer and the AC adapter, especially parts with the following labels attached for any crack or damage.

Danger:

- Hazardous voltage, current, and energy levels are present inside any component that has this label attached.

Working place

Do NOT use the computer in humid places such as a bathroom.

Keep the computer and other parts away from liquids.

Danger:

- An electric shock may be caused by spilled liquid.

Do NOT use the computer during a lightning storm.

Attention:

- Lightning storm may damage the computer and result in an electric shock.

Keep a good ventilation of the computer and other parts.

Danger:

- Placing the working computer or other parts on a bed, sofa or other flexible surface may block the ventilation slots causing overheat of your computer or other parts to overheat or even catch a fire.

Turn off wireless devices where they may cause interference, such as in a hospital or at an airport.

On using

Use ONLY the power cord, power adapter and battery pack shipped with the computer and never use them with another product.

Be sure the power outlet is suitable for the plug and provides the correct voltage and current for the product you are installing.

Danger:

- An unsuitable power supply may damage your computer or cause an electric shock or fire.

Do NOT use a power outlet, power cord, power adapter or battery pack that appears to be damaged or corroded.

Do NOT share an electrical outlet with other home or commercial appliances that draw large amounts of electricity.

If power strips are used, the load should NOT exceed the power strip's input rating. Unplug the power cord if there is a cracking, hissing, or a popping sound, or a strong odor comes from the computer.

Danger:

- Overloading the power supply may cause unstable voltages which might damage the computer, data, or attached devices, or even cause a fire.

Do NOT wrap the power cord around the power adapter or other objects.

Do NOT squeeze or pinch the cord, or place heavy objects on it.

Attention:

- Stressing the cord may cause the cord to fray, crack or crimp which may present a safety hazard.

Avoid keeping your hands, your lap, or any other part of your body in contact with a hot section of the working computer for any extended length of time.

Attention:

- Extended contact with your body, even through clothing, could cause discomfort or even a skin burn.

Do NOT drop, bump, scratch, hit or place heavy objects on the liquid crystal display (LCD) of your computer.

Attention:

- Direct contact with liquid crystal material from a broken LCD is hazardous; if contact occurs, rinse with large amount of running water for more than 15 minutes.

Service and upgrades

Do NOT attempt to service a product yourself unless instructed to do so by the customer support center or your documentation.

Attention:

- Do NOT take risks or attempt to diagnose the situation yourself. Contact the customer support center for further guidance. For a list of service and support phone numbers, go to http://consumersupport.lenovo.com.

Lenovo provides documentation with instructions when it is appropriate for customers to install options or replace units (CRUs). Closely follow all instructions when installing or replacing parts.

Disconnect the attached power cords, battery pack, and all the cables before you open the device covers, unless instructed otherwise in the installation and configuration procedures.

Keep the covers closed whenever the computer is plugged in.

Chapter 1. Getting to know your computer

Top view

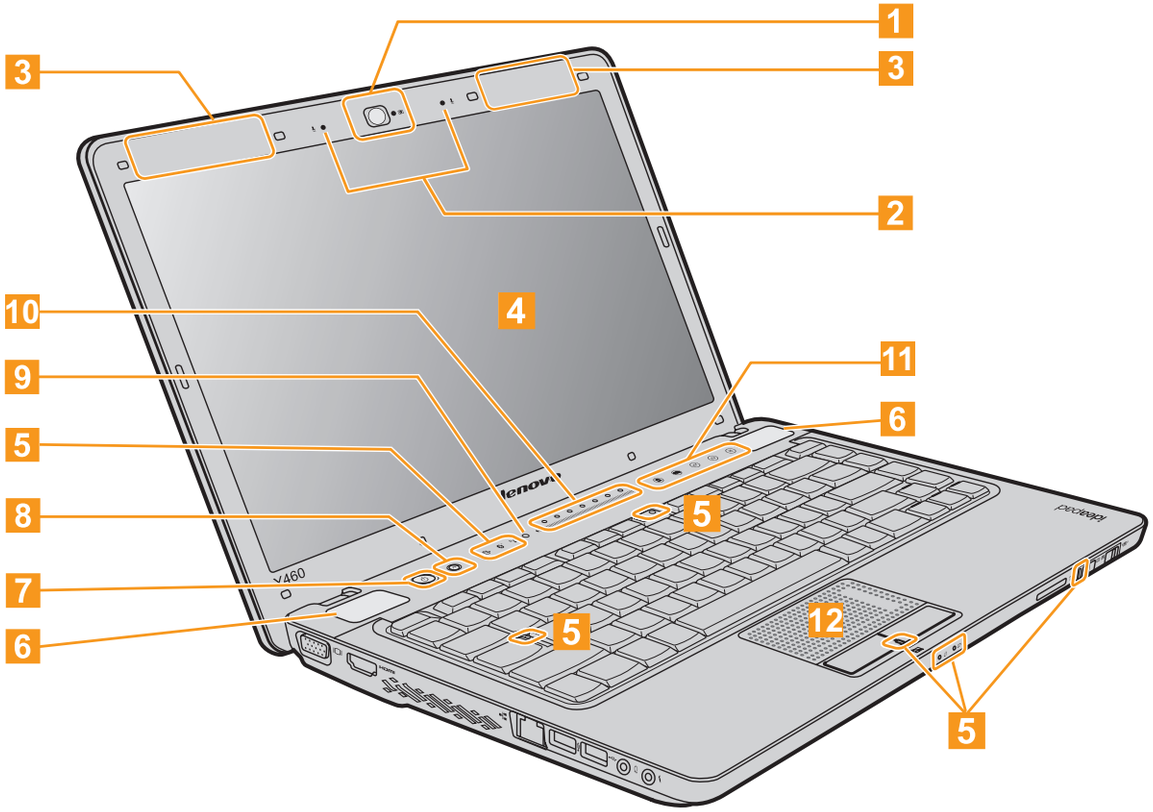

Note: The illustrations in this manual may differ from the actual product. Please refer to the actual product.

Attention:

- Do NOT open the display panel beyond 135 degree. When closing the display panel, be careful NOT to leave pens or any other objects in between the display panel and the keyboard. Otherwise, the display panel may be damaged.

1	**Integrated camera**	Use the camera for video communication.
2	**Built-in microphone**	The built-in microphone (with echo cancellation and noise reduction) can be used for video conferencing, voice narration, or simple audio recordings.
3	**Wireless module antennas**	The built-in antennas ensure optimal reception of wireless communication radio.
4	**Computer display**	The LCD display provides brilliant visual output.
5	**System status indicators**	For details, see “System status indicators” on page 25.
6	**Speakers**	The JBL certificated speakers provide rich and powerful sound.
7	**Power button**	Press this button to turn on the computer.
8	**OneKey Rescue System button**	Press this button to open OneKey Rescue System (If OneKey Rescue System has been preinstalled) when the computer is powered off.

Note: For details, see “Chapter 4. OneKey Rescue System” on page 40.

9	**Ambient Light Sensor**	The Ambient Light Sensor detects the environmental illuminance and automatically adjusts the panel brightness of the display accordingly, if enabled. You may enable/disable the Ambient Light Sensor in Lenovo Energy Management.
10	**Lenovo SlideNav bar**	For details, see “Lenovo SlideNav bar” on page 23.
11	**Cap sensor buttons**	For details, see “Cap Sensor buttons” on page 24.
12	**Touchpad**	The touchpad functions as a conventional mouse.

Note: For details, see “Using the touchpad” on page 16.

Left-side view

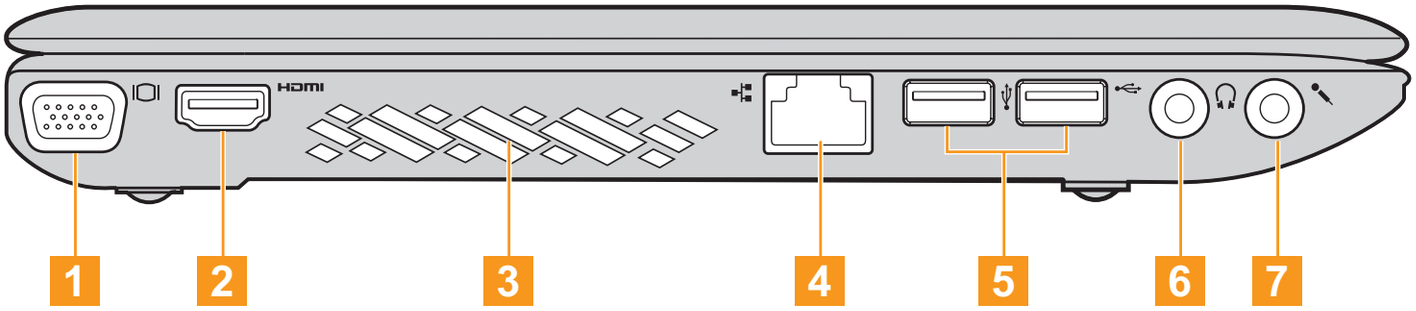

1	**VGA port**	Connects to external display devices.
2	**HDMI port**	Connects to devices with HDMI input such as a TV or a display.
3	**Fan louvers**	Dissipate internal heat.

Note: Make sure that none of the fan louvers are blocked or else overheating of the computer may occur.

4	**RJ-45 port**	Connects to an Ethernet network.

Note: For details, see “Wired connection” on page 32.

5	**USB port**	Connects to USB devices.

Note: For details, see “Connecting a universal serial bus (USB) device” on page 30.

6	**Headphone jack**	Connects to an external headphone.

Attention:

- Listening to music at high volume over extended periods of time may damage your hearing.

7	**Microphone jack**	Connects to an external microphone.

Right-side view

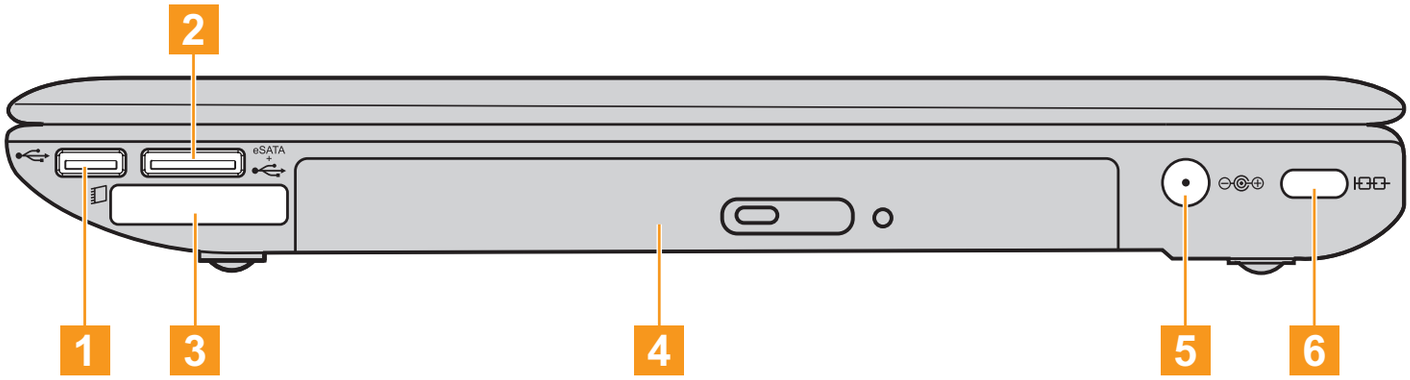

1	**USB port**	Connects to USB devices.
	Note: For details, see “Connecting a universal serial bus (USB) device” on page 30.	
2	**eSATA/USB combo port**	Connects to eSATA or USB devices.
	Note: For details, see “Connecting a universal serial bus (USB) device” on page 30.	
3	**ExpressCard Slot**	Connects to ExpressCard devices that are compatible with the ExpressCard/34 interface.
4	**Optical drive**	Your computer comes with an optical drive, such as a CD/DVD drive.

5	**AC power adapter jack**	Connect the AC adapter here.

Note: For details, see “Using AC adapter and battery” on page 13.

6	**Kensington slot**	Attach a security lock (not supplied) here.

Note: For details, see “Attaching a security lock (not supplied)” on page 26.

Front view

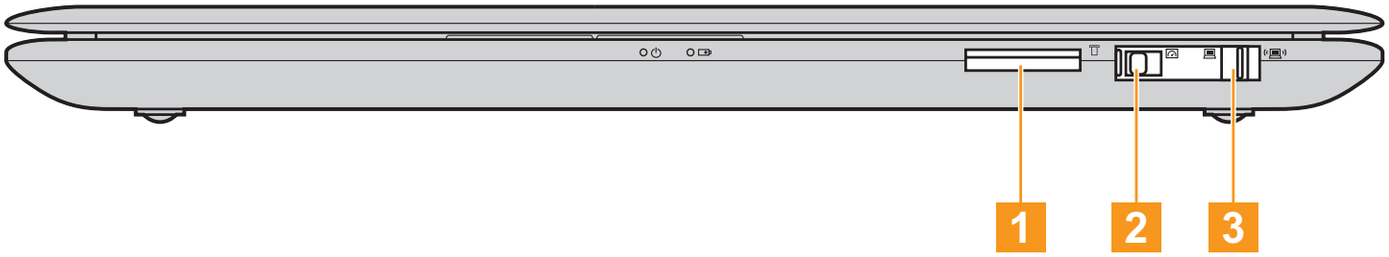

1	**Media card slot**	Insert media cards (not supplied) here.
	Note: For details, see “Using media cards (not supplied)” on page 28.	
2	**GPU (graphics processing unit) switch (specific models only)**	Slide and release this switch to change the GPU.
3	**Integrated wireless device switch**	Use this switch to turn on/off the wireless radio of all wireless devices on your computer.

Bottom view

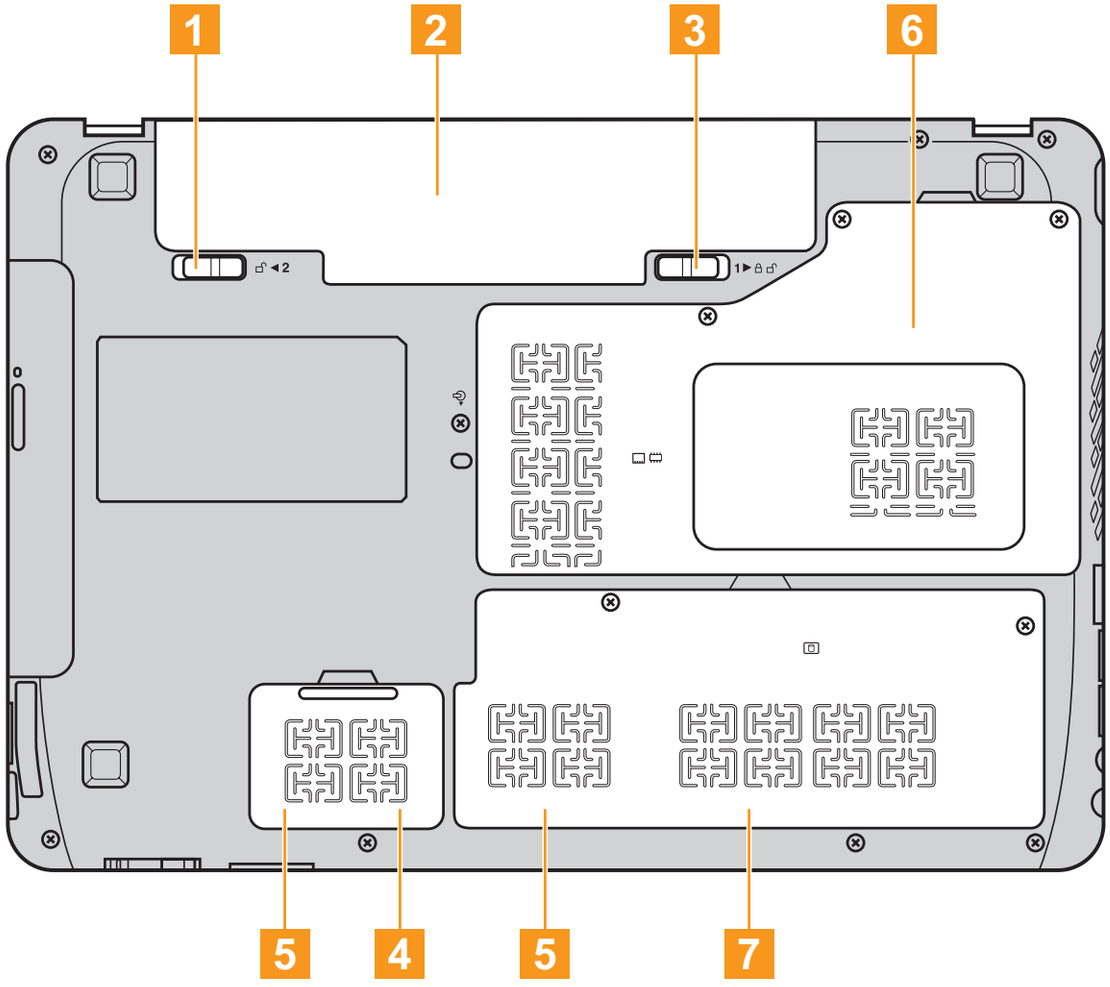

1	**Battery latch-spring loaded**	The spring-loaded battery latch keeps the battery pack secured in place.
2	**Battery pack**	For details, see “Using AC adapter and battery” on page 13.
3	**Battery latch-manual**	The manual battery latch is used to keep the battery pack secured in place.
4	**SIM card slot (specific models only)**	Insert wireless WAN SIM cards (not supplied) here. For details, see “Using Mobile Broadband (specific models only)” on page 36.
5	**Mini PCI ExpressCard slot compartment (specific models only)**	Houses the computer’s wireless module or SSD card.
6	**Central Processing Unit (CPU)/ Memory (RAM) compartment**	Houses the computer's CPU and memory.
7	**Hard disk drive (HDD) compartment**	Houses the computer's hard disk drive.

Note: In the case of a non-WWAN configuration, customer upgrade is not supported. The icon in the bottom view is for reference only, and no practical function is available.

First use

Read the manuals

Read the supplied manuals before using your computer.

Connect to the power

The supplied battery pack is not fully charged at purchase.
To charge the battery and begin using your computer, insert the battery pack and connect the computer to an electrical outlet. The battery is automatically charged while the computer is running on AC power.

Install the battery pack

Refer to the supplied *Setup Poster* to install the battery pack.

Connect the computer to an electrical outlet

1. Connect the power cord to the AC adapter.
2. Connect the AC adapter to the AC power adapter jack of the computer firmly.
3. Plug the power cord into an electrical outlet.

Turn on the computer

Press the power button to turn on the computer.

Configure the operating system

You may need to configure the operating system when it is first used. The configuration process may include the procedures below.

- Accepting the end user license agreement
- Configuring the Internet connection
- Registering the operating system
- Creating a user account

Putting your computer into sleep state or shutting it down

When you finish working with your computer, you can put it into sleep state or shut it down.

Putting your computer into sleep state

If you will be away from your computer for only a short time, put the computer into sleep state.
When the computer is in sleep state, you can quickly wake it to resume use, and bypass the startup process.

To put the computer into sleep state, do one of the following.

- Click and select **Sleep** from the **Start** menu.
- Press **Fn + F1**.

Note: Wait until the power indicator light starts blinking (indicating that the computer is in sleep state) before you move your computer. Moving your computer while the hard disk is spinning can damage the hard disk, causing loss of data.

To wake the computer, do one of the following.

- Press the power button.
- Press any key on the keyboard.
- If you do not use the computer for a long time, the computer will switch from sleep to hibernation automatically. To wake it up, just press the power button.

Shutting down your computer

If you are not going to use your computer for a day or two, shut it down.

To shut down your computer, click and select **Shut Down** from the **Start** menu.

Using AC adapter and battery

Checking battery status

You can determine the percentage of battery power remaining by using Windows **Power Options**.

Note: As each computer user has different habits and needs, it is difficult to predict how long a battery charge will last. There are two main factors:

- The amount of energy stored in the battery when you commence work.
- The way you use your computer: for example, how often you access the hard disk drive and how bright you make the computer display.

Charging the battery

When you find that the battery power is low, you need to charge the battery or replace it with a fully charged one.

The battery is charged when the AC adapter is connected to the computer and the battery is installed.

Charging time will depend on the usage environment.

You need to charge the battery in any of the following situations:

- When you purchase a new battery.
- If the battery status indicator turns amber.
- If the battery has not been used for a long time.

Notes:
- You are advised to insert the battery pack when using your computer to prevent small particles from entering the inside of your computer.
- To increase the life of the battery pack, the computer does not start recharging the battery immediately after it drops from fully charged.
- Charge the battery at a temperature between 50 °F and 80 °F (10 °C-30 °C).
- Full charge or discharge is not required.
- To protect the computer system, we advise you not to insert or remove the battery when the computer is on.

Removing the battery pack

If you are not going to use the computer for an extended period of time, or if you need to send your computer to Lenovo for service, etc. remove the battery pack from the computer.
Before removing the battery pack, make sure the computer has been shut down.

Handling the battery

If the rechargeable battery pack is replaced with an incorrect type, there may be danger of an explosion. The battery pack contains a small amount of harmful substances. To avoid possible injury and detriment to the environment, pay attention to the following points.

Notes:

- Replace only with a battery of the type recommended by Lenovo.
- Keep the battery pack away from fire.
- Do not expose the battery pack to water or rain.
- Do not attempt to disassemble the battery pack.
- Do not short-circuit the battery pack.
- Keep the battery pack away from children.
- Do not put the battery pack in trash that is disposed of in landfills. When disposing of the battery, comply with local ordinances or regulations and your company's safety standards.

Using the touchpad

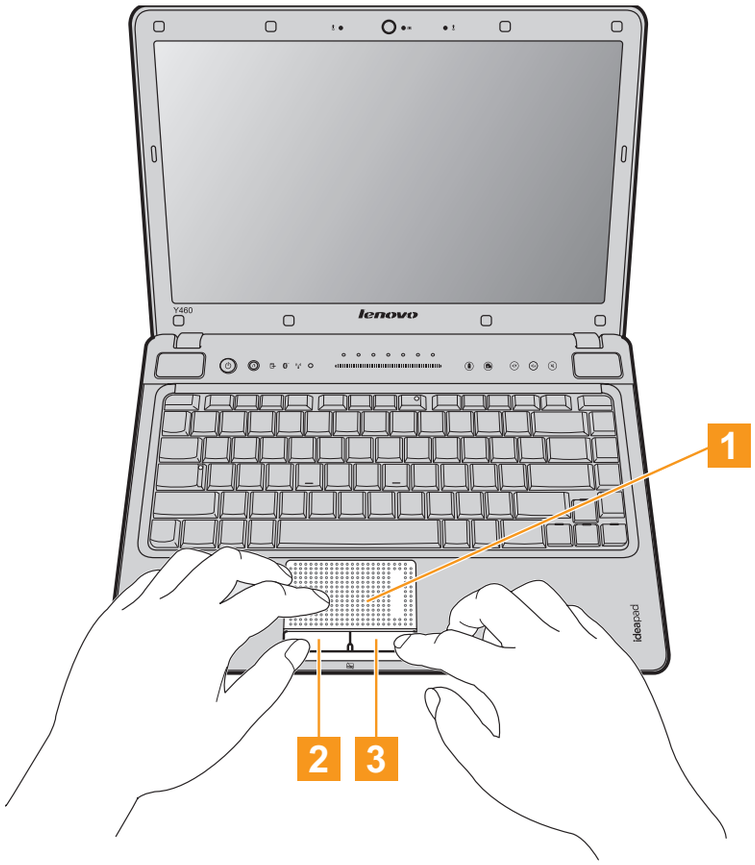

1	**Touchpad**	To move the cursor on the screen, slide your fingertip over the pad in the direction to which you want the cursor to move.
2	**Left click button**	The function corresponds to that of the left mouse button on a conventional mouse.
3	**Right click button**	The function corresponds to that of the right mouse button on a conventional mouse.

Note: You can enable/disable the touchpad using **Fn+F6**. See "System status indicators" on page 25.

Gestures

The touch pad recognizes certain gestures, and allows for easy execution of actions such as zoom in/out, or scroll up/down, etc.

Pinch zoom

- Place two fingers down on the TouchPad surface.
- Slide the fingers further apart to zoom in or slide the fingers closer together to zoom out. For the best zooming experience, use the tips of your fingers.

Two-Finger Scrolling

- Place two fingers down on the TouchPad surface. The fingers should be slightly separated.
- Using a straight continuous motion, slide both fingers in the desired direction.
- Lift both fingers up off the TouchPad surface to stop scrolling.

Rotating

- Place two fingers down on the TouchPad surface. The fingers should be slightly separated.
- Rotate one finger in the desired direction.

Three-Finger Flick

- Place three fingers, slightly separated, down on the TouchPad surface.
- Flick your fingers in a linear, continuous motion in the desired direction, moving from one side of the TouchPad to the opposite side.
- Horizontal finger motion, sliding your fingers to the right or left will page forwards or backwards in a photo viewer or an Internet browser window.
- Slide your fingers upwards to launch slideshow mode, Slide your fingers downwards to exit slideshow mode.

Using the keyboard

Your computer has a numeric keypad and function keys incorporated in its standard keyboard.

Numeric keypad

The keyboard has keys that, when enabled, work as a 10-key numeric keypad.

To enable or disable the numeric keypad, press **Fn+F8**.

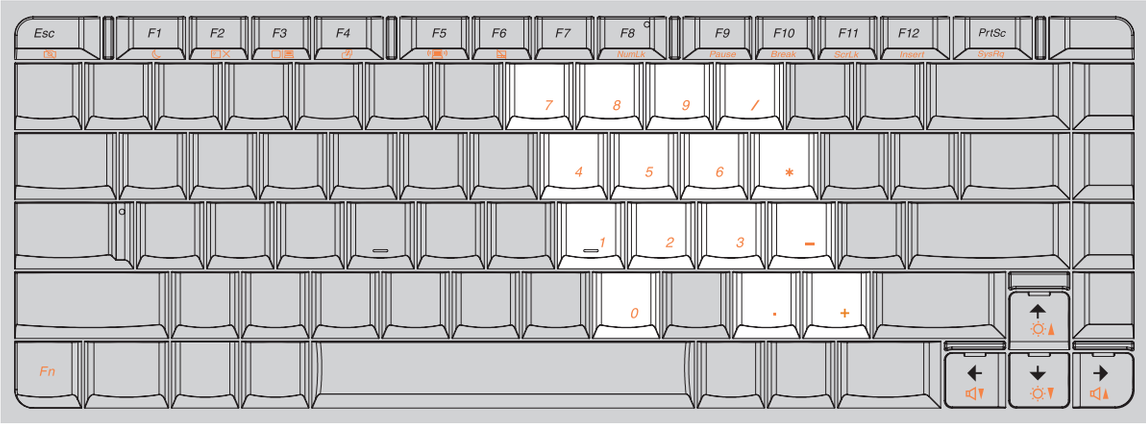

Note: The indicator on the upper right corner of the **F8 (NumLk)** key will light on if the numeric keypad is enabled.

Function key combinations

Through the use of the function keys, you can change operational features instantly. To use this function, press and hold **Fn** 1, then press one of the function keys 2.

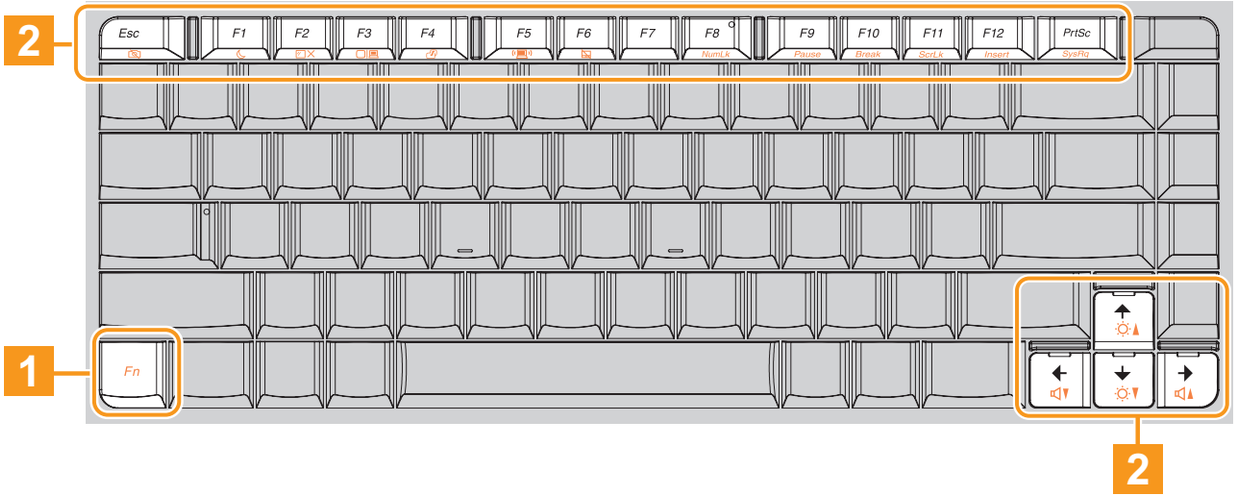

The following describes the features of each function key.

Fn + Esc:	Turn on/off the integrated camera.
Fn + F1:	Enter sleep mode.
Fn + F2:	Turn on/off the backlight for the LCD screen.
Fn + F3:	Shift to other connected display devices.
Fn + F4:	Open the interface for display resolution settings.
Fn + F5:	Open the interface for integrated wireless devices settings (enable/disable).
Fn + F6:	Enable/Disable the touchpad.
Fn + F7:	Start/Pause playback of Windows Media Player.
Fn + F8:	Enable/Disable the numeric keypad.
Fn + F9:	Activate the pause function.
Fn + F10:	Activate the break function.
Fn + F11:	Enable/Disable the Scroll Lock.
Fn + F12:	Turn on/off the insert input.
Fn + PrtSc:	Activate the system request.
Fn + ↑/↓:	Increase/Decrease display brightness.
Fn + ←/→:	Decrease/Increase volume level.

Special keys and buttons

Your computer has several special keys and buttons.

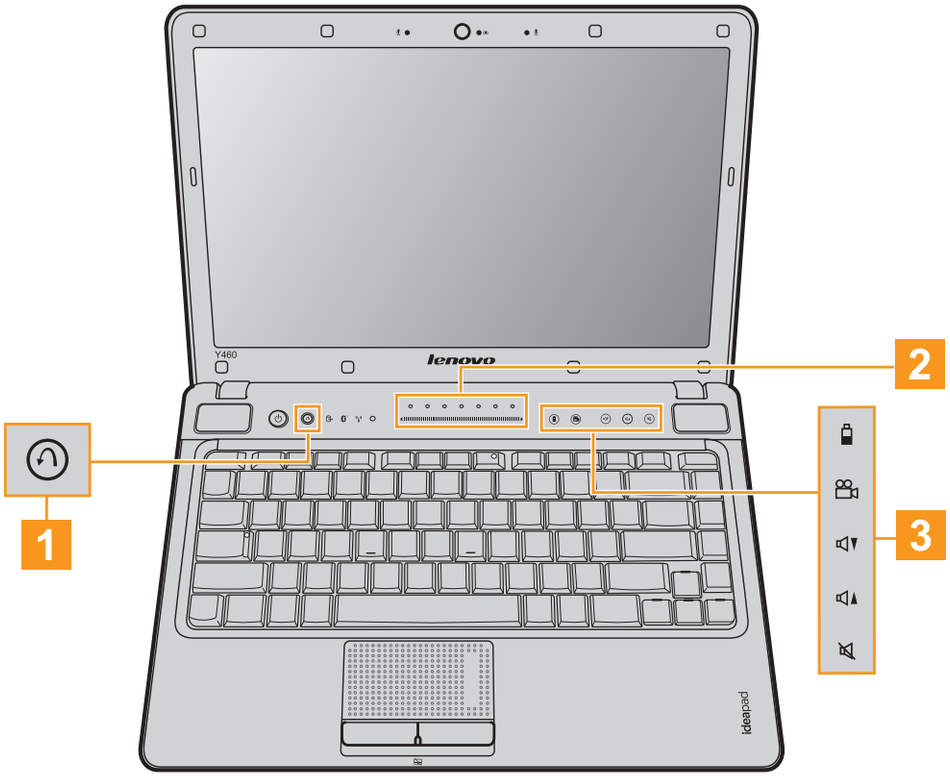

1 OneKey Rescue System button

- When the computer is powered-off, press this button to enter the OneKey Rescue System if Lenovo OneKey Rescue System has been preinstalled.
- In Windows operating system, press this button to start Lenovo OneKey Recovery.

Note: For details, see “OneKey Rescue System” on page 40.

2 Lenovo SlideNav bar

Lenovo SlideNav is a piece of cool software. You can launch an item quickly, change wallpaper, zip or unzip the screen, and even switch between workspaces (only available in trial version), just by simply sliding your finger on Lenovo SlideNav bar.

Launching an Item: Slide your finger on Lenovo SlideNav bar to select an item. Once the item is selected, quickly release your finger to launch it.

Changing Wallpaper: To change the desktop wallpaper, use the Lenovo SlideNav bar to slide from the very right-hand side of the screen to the very left-hand side.

Zipping the Screen: You are able to zip or unzip the screen just by a simple sliding. If the screen is zipped, all input are locked, such as keyboard, mouse, touchpad and even touch panel.

Switching Workspace (only available in trial version): You are able to edit the name or choose a style for each workspace. Workspace indicator is always embedded in Windows task bar, which is used to indicate the status of each workspace.

Note: For details, see the help file of Lenovo SlideNav Application.

3 Cap Sensor buttons

Energy management button:

Quick launch Lenovo EM utility for power management.

OneKey Theater II button:

Press to switch Lenovo OneKey Theater II application for best user scenario. It includes Normal Mode, Movie Mode and Intelligent Mode.

Volume Down button:

Quick decrease volume level.

Volume Up button:

Quick increase volume level.

Mute button:

Mute/Unmute the sound.

System status indicators

These indicators inform you of the computer status.

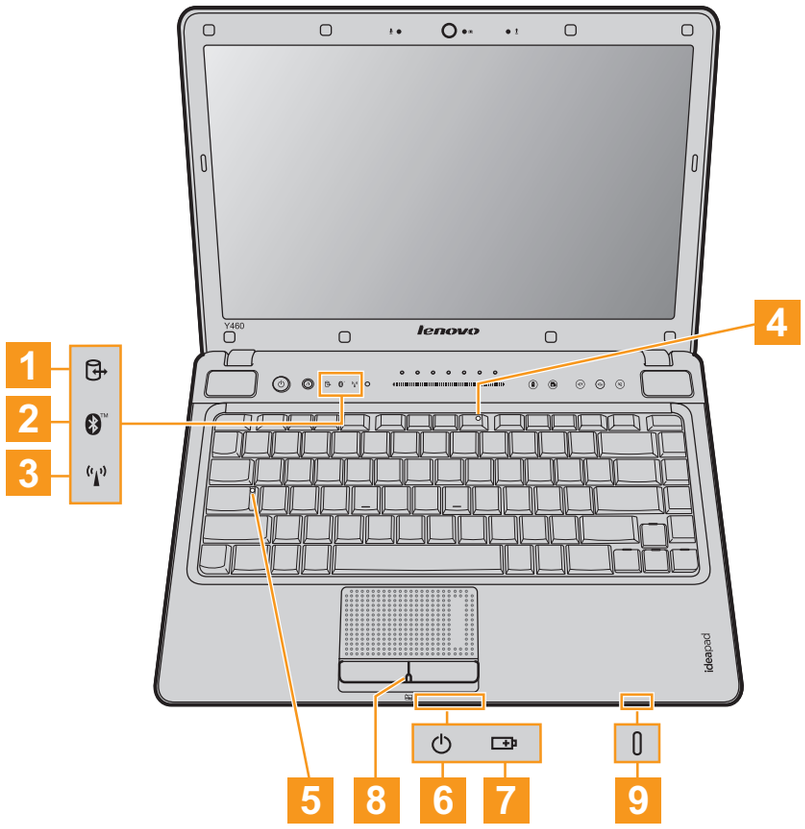

1. **Hard disk drive indicator**
2. **Bluetooth indicator**
3. **Wireless communication indicator**
4. **Num lock indicator**
5. **Caps lock indicator**
6. **Power status indicator**
7. **Battery status indicator**
8. **Touchpad indicator**
9. **Graphics status indicator (specific models only)**

Securing your computer

This section provides information about how to help protect your computer from theft and unauthorized use.

Attaching a security lock (not supplied)

You can attach a security lock to your computer to help prevent it from being removed without your permission. For details on installing the security lock, please refer to the instructions shipped with the security lock that you have purchased.

Refer to the “Right-side view” on page 5 for the location of the Kensington slot.

Notes:

- Before purchasing any security product, verify that it is compatible with this type of security keyhole.
- You are responsible for evaluating, selecting, and implementing the locking devices and security features. Lenovo offers no comment judgement or warranty regarding the function, quality or performance of locking devices and security features.

Using VeriFace™

VeriFace is a face recognition software which takes a digital snapshot, extracts key features of your face, and creates a digital map that becomes the system's "password".

Note: The face registration and verification works best in an environment with steady and even light.

For more instructions on VeriFace, see the help file on your software.

Using passwords

Using passwords helps prevent your computer from being used by others. Once you set a password and enable it, a prompt appears on the screen each time you power on the computer. Enter your password at the prompt. The computer cannot be used unless you enter the correct password.

Note: This password can be from one to seven alphanumeric characters in any combination.

For details about how to set the password, see the help to the right of the screen in **BIOS setup utility**.

Note: To enter **BIOS setup utility**, press **F2** when the Lenovo logo appears on the screen while the computer is starting up.

Connecting external devices

Your computer has a wide range of built-in features and connection capabilities.

Using media cards (not supplied)

Your computer supports the following types of media cards:

- Secure Digital (SD) card
- Secure Digital PRO (SD PRO) card
- MultiMediaCard (MMC)
- Memory Stick (MS)
- Memory Stick PRO (MS PRO)
- xD-Picture (xD) card

Notes:

- Insert ONLY one card in the slot at a time.
- This card reader does not support SDIO devices (e.g. SDIO Bluetooth, etc.).

Inserting a media card

1. Push the dummy card until you hear a click. Gently pull the dummy card out of the media card slot.

Note: The dummy card is used for preventing dust and small particles from entering the inside of your computer when the media card slot is not in use. Retain the dummy card for future use.

2. Push the card directly into the media card slot until it reaches the end.

Removing a media card

1. Push the media card until you hear a click. Gently pull the media card out of the media card slot.
2. Insert the dummy card to the media card slot.

Note: Before removing the media card, unable it by Windows **Safely Remove Hardware** utility to avoid data corruption.

Connecting a universal serial bus (USB) device

Your computer comes with 3 USB ports and an eSATA/USB port compatible with USB devices.

Note: When using a high power consumption USB device such as USB ODD, use the external device's power adapter. Otherwise, the device may not be recognized, or system shut down may result.

Connecting a *Bluetooth* device (specific models only)

If your computer has an integrated *Bluetooth* adapter card, it can connect to and transfer data wirelessly to other *Bluetooth* enabled devices, such as notebook computers, PDAs and cell phones. You can transfer data between these devices without cables and up to 10 meters range in open space.

Note: The actual maximum range may vary due to interference and transmission barriers. To get the best possible connection speed, place the device as near your computer as possible.

Enabling *Bluetooth* communications

1. Slide the integrated wireless device switch to .
2. Press **Fn** + **F5** to make configuration.

Notes:
- When you do not need to use the *Bluetooth* function, turn it off to save battery power.
- For details on pairing with wireless devices, refer to their instructions.
- Pairing methods may vary by operating systems.

Using Switchable Graphics (specific models only)

Some IdeaPad models support Switchable Graphics. With this technology, you have the flexibility to switch between a dedicated AMD® GPU* (high-performance GPU) and an integrated Intel GPU (power-saving GPU) without restarting the Windows operating system.

*GPU is short for graphics processing unit.

Note: The dedicated AMD GPU provides you with superior graphics performance while the energy-efficient integrated graphics provides longer operation with the battery. You can switch to the high-performance GPU to gain the best graphics performance. However, when the computer is using battery power you are advised to switch to the power-saving GPU if you are not running graphics-intensive applications.

To change the GPU, do the following:

1. Start your computer to the Windows operating system. If the computer is in sleep or hibernation mode, press the power button to wake it up.

Note: Do not try to change the GPU when the computer is in sleep or hibernation mode.

2. Activate the Switchable Graphics dialog box. To activate the dialog box, you can:

- right-click on the desktop and select **Configure Switchable Graphics** from the pop-up menu.
- slide and release the GPU switch on the front side of your computer.

Chapter 3. Using the Internet

As a global network, the Internet connects computers worldwide, providing services such as e-mailing, information searching, electronic commerce, Web browsing and entertainment.

You can connect the computer to the Internet in the following ways:

Wired connection: uses physical wiring to connect.

Wireless network technology: connect without wiring.

Wired connection

Wired connection is a reliable and safe way to connect the computer to the Internet. Generally, the following two accessing methods are widely used.

Cable	Cable Internet services use a cable modem connected to the residential cable TV line.
DSL	DSL is a family of related technologies that bring high-speed network access to homes and small businesses over ordinary telephone lines.

Hardware connection:

Cable

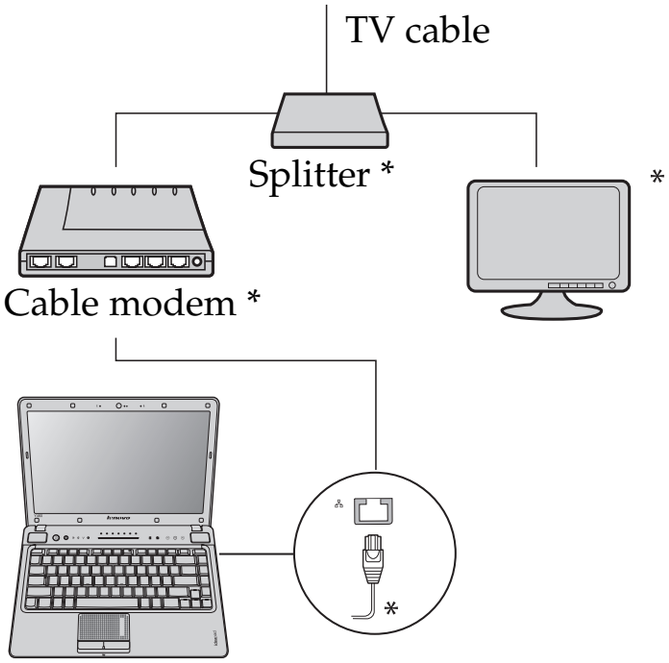

DSL

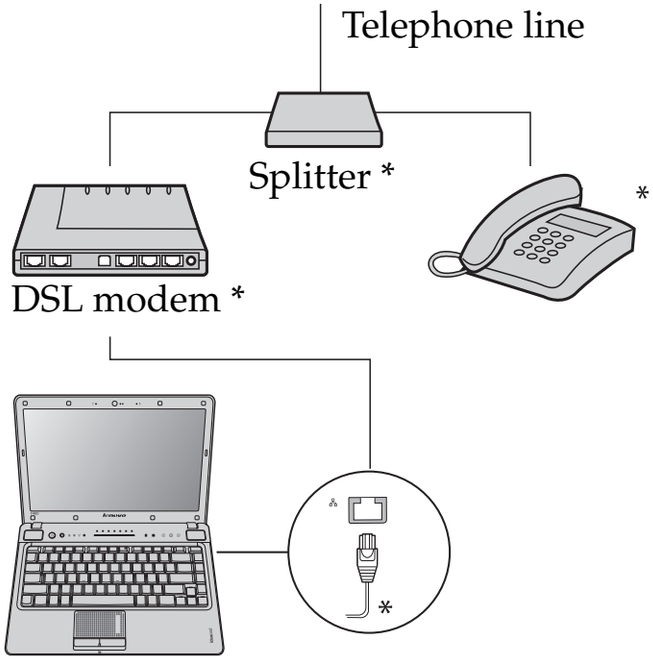

* Not supplied.

Note: The above diagrams are for reference only. Actual connection method may vary.

Software configuration

Consult your Internet Service Provider (ISP) for details on how to configure your computer.

Wireless connection

Wireless connection provides mobile access to the Internet, allowing you to stay online anywhere the wireless signal covers.

Divided by the signal scales, wireless connection to the Internet can be built based on the following standards.

Wi-Fi	Wi-Fi networks cover a small physical area, like a home, office, or small group of buildings. An access point is necessary for the connection.
WiMAX	WiMAX networks connect several Wireless LAN systems to cover a metropolitan area, providing high-speed broadband access without the need for cables.
Mobile Broadband	The Mobile Broadband network provides Internet access to computers, cell phones and other devices over a large geographic area. Mobile networks are used for data transmission, and access is usually provided by a mobile network operator. A Mobile Broadband SIM card is necessary for the connection.

Note: Your computer may not support all wireless connection methods.

Using Wi-Fi/WiMax (specific models only)

Enabling wireless connection

To enable wireless communications, do the following:

1. Slide the integrated wireless device switch to .
2. Press **Fn + F5** to make configuration.

Hardware connection

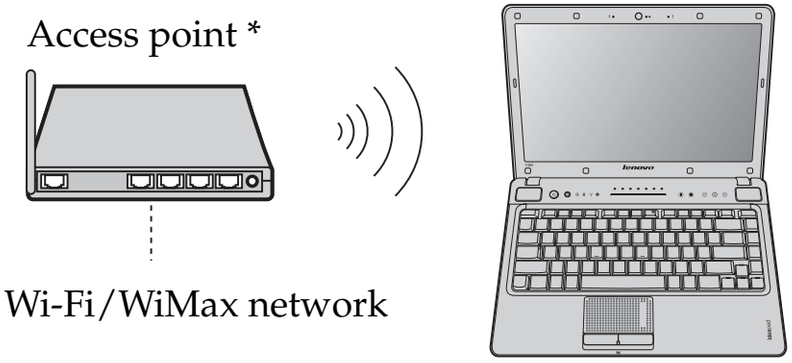

* Not supplied

Software configuration

Consult your Internet Service Provider (ISP) and search Windows Help and Support Center for details on how to configure your computer.

Using Mobile Broadband (specific models only)

Before getting started with Mobile Broadband, you first need to choose a mobile network operator and make sure you are in the coverage area of the network. After that, you also need:

- To activate the Mobile Broadband service through your local mobile network operator. You will get a Subscriber Identity Module (SIM) card after activation. For instructions on inserting the SIM card, refer to "Inserting the SIM card" on page 37.

Notes:

- Various standards are in use by mobile operators to provide Mobile Broadband services. The Lenovo Mobile Broadband module may support one or more of the following standards:
  - GSM (Global System for Mobile Communications)
  - TD-SCDMA (Time Division-Synchronous Code Division Multiple Access)
  - SCDMA (Synchronous Code Division Multiple Access)
  - EV-DO (Evolution Data Optimized)
  - HSPA (High Speed Packet Access)
- Mobile Broadband is a subscription service. Refer to your local mobile network operator for availability, cost and other information.
- A SIM card is a type of smart card used by mobile network operators to identify their service subscribers on the mobile network. You will get the SIM card from your mobile network operator after you have activated the Mobile Broadband service.

- A connection management utility to connect/disconnect to your Mobile Broadband network.

Note: In general, your mobile service provider provides this utility.

Inserting the SIM card

To insert the SIM card:

1. Turn off the computer; then disconnect the AC adapter and all cables from the computer.
2. Close the computer display and turn it over.
3. Remove the battery.
4. Remove the SIM card slot cover.
5. Open the SIM card holder, and insert the SIM card to the card slot as shown in the drawing. Close the SIM card holder.

Note: Insert the SIM card in the direction shown below. Inserting the SIM card in the wrong direction may damage the SIM card slot.

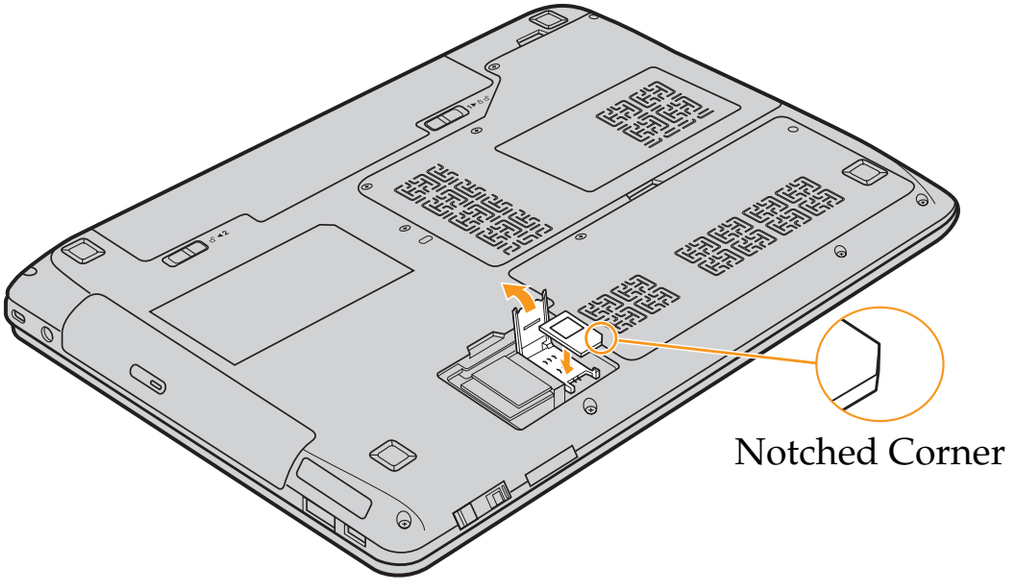

6. Reinstall the SIM card slot cover.
7. Put the battery back in place, turn the computer over again, and reconnect the cables.

Removing the SIM card

To remove the SIM card:

1. Turn off the computer, then disconnect the AC adapter and all cables from the computer.
2. Close the computer display and turn it over.
3. Remove the battery.
4. Remove the SIM card slot cover.

5. Open the SIM card holder, and pull the SIM card out. Close the SIM card holder.

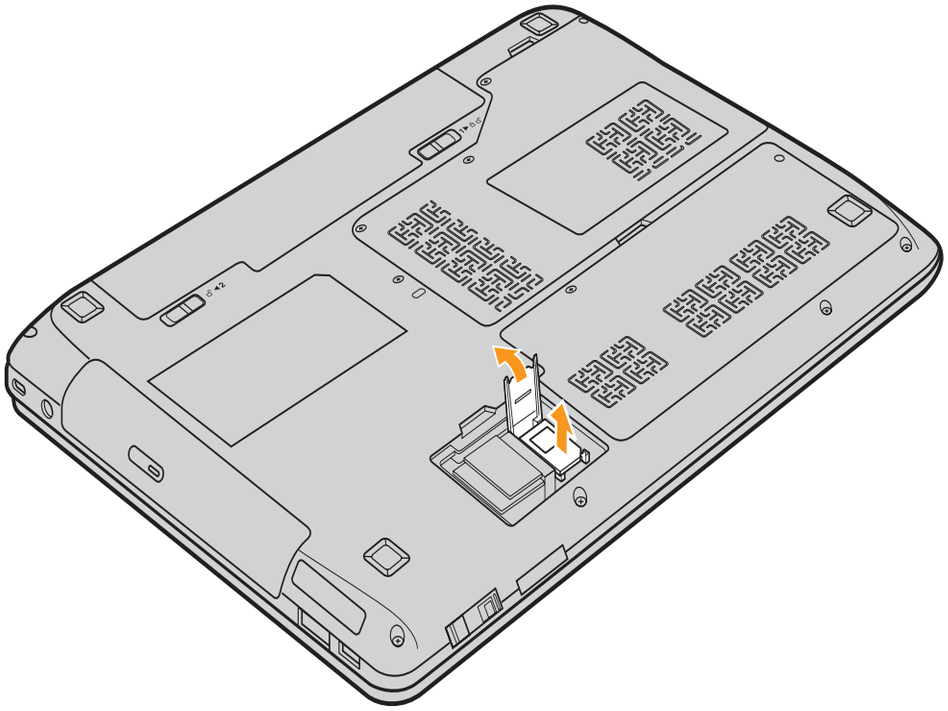

6. Reinstall the SIM card slot cover.
7. Put the battery back in place, turn the computer over again, and reconnect the cables.

Note: Never insert or remove the SIM card while the computer is on. Doing so may cause permanent damage to the SIM card as well as the SIM card reader.

OneKey Rescue System

Introduction

The Lenovo OneKey Rescue System is an easy-to-use application that can be used to back up the data on your system partition (C drive) for easy restore when required. You can run Lenovo OneKey Recovery under the Windows operating system, and the OneKey Rescue System without starting the Windows operating system.

Attention:

In order to utilize the features of the OneKey Rescue System, your hard disk already includes a hidden partition by default to store the system image file and OneKey Rescue System program files. This default partition is hidden for security reasons and is the reason the available disk space is less than it claims. The exact available hard disk space depends on the file size of the mirror image file (based on the size of operating system and pre-installed software).

Using Lenovo OneKey Recovery (Within Windows operating system)

In Windows operating system, double click the OneKey Recovery System Icon on the desktop to launch Lenovo OneKey Recovery.

Within the program, you can back up the system partition on the hard disk drive, other storage devices, or by creating recovery discs.

Notes:

- The backup process and creation of recovery discs may take some time, connect the AC adapter and battery pack to your computer.
- After the recovery discs are burned, please number them so that you can use them in the correct order.
- Computers without an integrated optical drive support the creation of recovery discs; however an appropriate external optical drive is needed to physically create the recovery discs.

For more instructions, see the help file of Lenovo OneKey Recovery.

Using Lenovo OneKey Rescue System (Without Windows operating system)

In the event that the operating system cannot be loaded, follow the steps below to access OneKey Rescue System.

- Shut down your computer.
- Press the ↶ key to launch OneKey Rescue System.

Within the program, you can choose to restore your system partition to the original factory status, or to a previously generated backup.

Note: The recovery process is irreversible. Make sure to back up any critical data before using the recovery feature.

Chapter 5. Troubleshooting

Frequently Asked Questions

This section lists frequently asked questions and tell where you can find detailed answers. For details about each publication included in the package with your computer, see Lenovo IdeaPad Y460 *Setup Poster*.

What safety precautions should I follow when using my computer?

See "Important safety information" on page iii of this guide.

How can I prevent problems with my computer?

See "Appendix B. Use and care information" on page 71 of this guide.
More tips can be found in Chapter 1 and 2.

What are the main hardware features of my new computer?

More information can be found in Chapter 1 and 2.

Where can I find the detailed specifications for my computer?

See http://consumersupport.lenovo.com.

How can I upgrade or replace a customer replaceable unit (CRU)?

See "Appendix D. Customer replaceable units (CRUs)" on page 99 of this guide.

Where are the recovery discs?

Your computer did not come with a recovery disc. For an explanation of the alternative recovery methods offered by Lenovo, see "Chapter 4. OneKey Rescue System" on page 40.

How can I contact the customer support center?

See "Appendix A. Getting help and service" on page 66 of this guide.

Where can I find warranty information?

For the warranty applicable to your computer, including the warranty period and type of warranty service, see "Appendix C. Lenovo limited warranty" on page 85.

How can I install the device drivers?

A compatible device driver is a requirement to ensure correct operation and performance of each component in your computer. If your computer is preinstalled with an operating system, Lenovo provides all the drivers you need in your hard disk.

What can I do if the backup process fails?

If you can start the backup feature without a problem, but it fails during the backup process, please try the following steps:

1. Close other applications, then restart the backup process.
2. Check if the destination media is damaged, try to select another path and then try again.

When do I need to restore the system to the factory status?

You can use this feature when your system fails or you need to re-install your operating system. This will restore your computer back to the initial status when you first booted up your computer after receiving it from the store. If there is critical data on your current partition, back it up before you run this recovery feature.

Troubleshooting

If you do not find your problem here, see Chapter 2. The following section only describes problems that might negate the need to refer to the more comprehensive information in Chapter 2.

Display problems

When I turn on the computer, nothing appears on the screen.	• If the screen is blank, make sure that: - The battery is installed correctly. - The AC adapter is connected to the computer and the power cord is plugged into a working electrical outlet. - The computer power is on. (Press the power button again for confirmation.) - The memory is installed correctly. • If these items are properly set, and the screen remains blank, have the computer serviced.
When I turn on the computer, only a white cursor appears on a blank screen.	• Restore backed-up files to your Windows environment or the entire contents of your system partition (C drive) to the original factory contents using OneKey Recovery. If you still see only the cursor on the screen, have the computer serviced.

My screen goes blank while the computer is on.	• Your screen saver or power management may be enabled. Do one of the following to exit from the screen saver or to resume from sleep or hibernation mode: - Touch the touchpad. - Press any key on the keyboard. - Press the power button. - Press **Fn**+**F2** to confirm whether the LCD screen has been turned off.

Problems on changing graphics processing unit (GPU)

When I right-click on the desktop, the **Configure Switchable Graphics** option is not displayed on the pop up menu. Or when I slide and release the GPU switch on the front side of the computer, the Switchable Graphics dialog box is not displayed.	• Check the graphics device setting in BIOS setup utility. In BIOS setup utility, move the cursor to **Configuration**, make sure **Switchable Graphics** option is set active under **Graphics Device**. • Check the operating system you are using. Switchable Graphics technology is currently available only on Windows Vista and Windows 7.
The screen remains blank when I try to switch the GPU.	• Make sure your computer is not running an exclusive mode Direct3D or OpenGL application. If your computer is running either of the above applications, quit the application before you switch the GPU.

The system cannot be switched from highperformance GPU to power-saving GPU.	• If you are outputting the screen to an external display through an HDMI cable, you might not be able to switch to power-saving GPU. Change the display device back to the LCD display of your notebook before you switch to power-saving GPU.

A Password problem

I forgot my password.	• If you forget your user password, you must take your computer to a Lenovo authorized servicer or a marketing representative to have the password changed. • If you forget your HDD password, a Lenovo authorized servicer cannot reset your password or recover data from the hard disk. You must take your computer to a Lenovo authorized servicer or a marketing representative to have the hard disk drive replaced. Proof of purchase is required, and a fee will be charged for parts and service. • If you forget your supervisor password, a Lenovo authorized servicer cannot reset your password. You must take your computer to a Lenovo authorized servicer or a marketing representative to have the system board replaced. Proof of purchase is required, and a fee will be charged for parts and service.

Keyboard problems

A number appears when you enter a letter.	• The numeric lock function is on. To disable it, press **Fn+F8**.

Sleep or hibernation problems

The computer enters sleep mode unexpectedly.	• If the processor overheats, the computer automatically enters sleep mode to allow the computer to cool and to protect the processor and other internal components. Check the settings for sleep mode.
The computer enters sleep mode immediately after Power-on self-test (POST).	• Make sure that: - The battery is charged. - The operating temperature is within the acceptable range. See "Appendix B. Use and care information" on page 71.

Note: If the battery is charged and the temperature is within range, have the computer serviced.

The critical low-battery error message appears, and the computer immediately turns off.	• The battery power is getting low. Connect the AC adapter to the computer, or replace the battery with a fully charged one.

The computer does not return from sleep mode and does not work.	• If the computer does not return from sleep mode, it may have entered hibernation mode automatically because the battery is depleted. Check the power indicator. • If your computer is in sleep mode connect the AC adapter to the computer, then press any key or the power button. • If your computer is in hibernation mode or power-off state. Connect the AC adapter to the computer, then press the power button to resume operation.

Note: If the system still does not return from sleep mode, your system has stopped responding, and you cannot turn off the computer, reset the computer. However, unsaved data may be lost. To reset the computer, press and hold the power button for 4 seconds or more. If the computer is still not reset, remove the AC adapter and the battery.

Computer screen problems

The screen is blank.	• Do the following: - If you are using the AC adapter, or using the battery, and the battery status indicator is on, press **Fn** + ↑ to make the screen brighter. - If the power indicator is blinking, press the power button to resume from the sleep mode. - If the problem persists, follow the solution in the following problem "The screen is unreadable or distorted." - Press **Fn**+**F2** to confirm whether the LCD screen has been turned off.
The screen is unreadable or distorted.	• Make sure that: - The display device driver is installed correctly. - The screen resolution and color quality are correctly set. - The monitor type is correct.
Incorrect characters appear on the screen.	• Did you install the operating system or application program correctly? If they are installed and configured correctly, have the computer serviced.

Sound problems

No sound can be heard from the speaker even when the volume is turned up.	• Make sure that: - The Mute function is off. - The headphone jack is not used. - Speakers is selected as a playback device.

Battery problems

Your computer shuts down before the battery status indicator shows empty. *-or-* Your computer operates after the battery status indicator shows empty.	• Discharge and recharge the battery.
The operating time for a fully charged battery is short.	• For details, see "Handling the battery" in Chapter 2.
The computer does not operate with a fully charged battery.	• The surge protector in the battery might be active. Turn off the computer for one minute to reset the protector, then turn on the computer again.
The battery does not charge.	• For details, see "Handling the battery" in Chapter 2.

A hard disk drive problem

The hard disk drive does not work.	• In the **Boot** menu in **BIOS Setup Utility**, make sure that the hard disk drive is included in the **Boot priority order** correctly.

A startup problem

The Microsoft® Windows operating system does not start.	• Use the OneKey Rescue System to help solve or identify your problem. For details on the OneKey Rescue System, see "Chapter 4. OneKey Rescue System" on page 40.

OneKey Rescue System problems

Backup cannot be made.	• You are not currently using a Windows operating system. • There is not enough space to store the backed up data. You will need to free more hard disk space on your system partition (C drive).
Fail to restore system partition to factory default.	• The system partition, such as the partition size or the drive capacity of C, has been modified.

Other problems

The computer does not respond.	• To turn off your computer, press and hold the power button for 4 seconds or more. If the computer still does not respond, remove the AC adapter and the battery. • Your computer might lock when it enters sleep mode during a communication operation.
The computer does not start from the desired device.	• See the **Boot** menu of **BIOS Setup Utility**. Make sure that **Boot priority order** in **BIOS Setup Utility** is set so that the computer starts from the device you want. • Also make sure that the device from which the computer starts is enabled. In the **Boot** menu in **BIOS Setup Utility**, make sure that the device is included in the **Boot priority order** list. • Press **F2** when the Lenovo logo appears on the screen while the computer is starting up to select the device you want the computer starts from.

The connected external device does not work.	• Do not connect or disconnect any external device cables other than Plug and Play (PnP) device while the computer power is on; otherwise, you might damage your computer. • When using a high power consumption external devices such as an external USB optical disk drive, use external device power adapter. Otherwise, the device may not be recognized, or system shut down may result.

Replacing the battery

Note: Use only the battery provided by Lenovo. Any other battery could ignite or explode.

To replace the battery

1. Turn off the computer, or enter hibernation mode. Disconnect the AC adapter and all cables from the computer.
2. Close the computer display, and turn the computer over.

3. Unlock the battery latches in the unlocked position 1, remove the battery pack in the direction shown by the arrow 2.

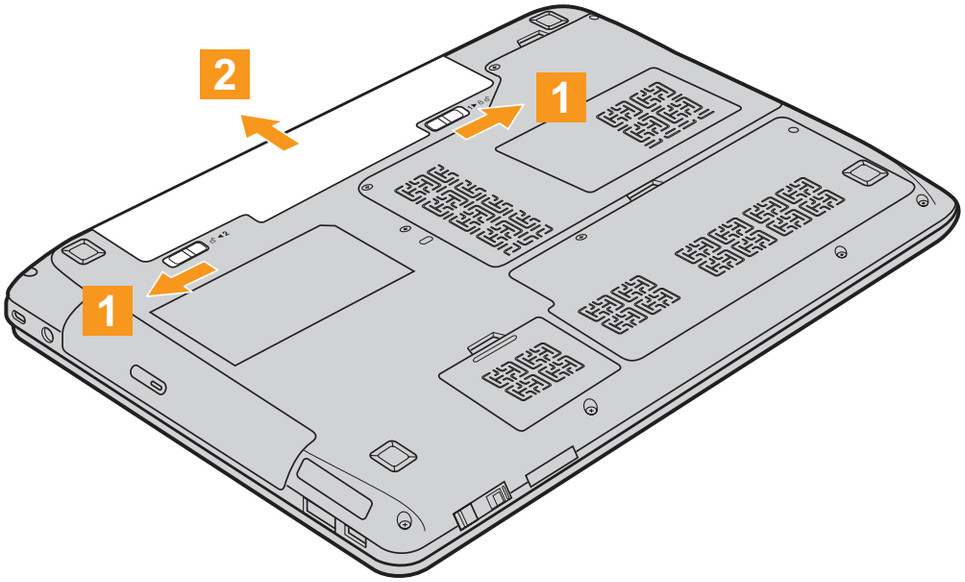

4. Install a fully charged battery.
5. Turn the computer over again. Connect the AC adapter and the cables to the computer again.

Replacing memory

You can increase the amount of memory in your computer by installing a double data rate (DDR3) small outline dual inline memory module (SO-DIMM)-available as an option-in the memory slot of your computer. SO-DIMMs are available in various capacities.

Note: Use only the memory types supported by your computer. If you incorrectly install optional memory, or install an unsupported memory type, a warning beep will sound when you try to start the computer.

To install an SO-DIMM, do the following:

1. Touch a metal table or a grounded metal object to reduce any static electricity in your body, which could damage the SO-DIMM. Do not touch the contact edge of the SO-DIMM.
2. Turn off the computer. Disconnect the AC adapter and all cables from the computer.
3. Close the computer display, and turn the computer over.
4. Remove the battery again.

5. Remove the CPU/Memory compartment cover.

   a. Remove the screws that secure the compartment cover 1.

   b. Remove the compartment cover 2.

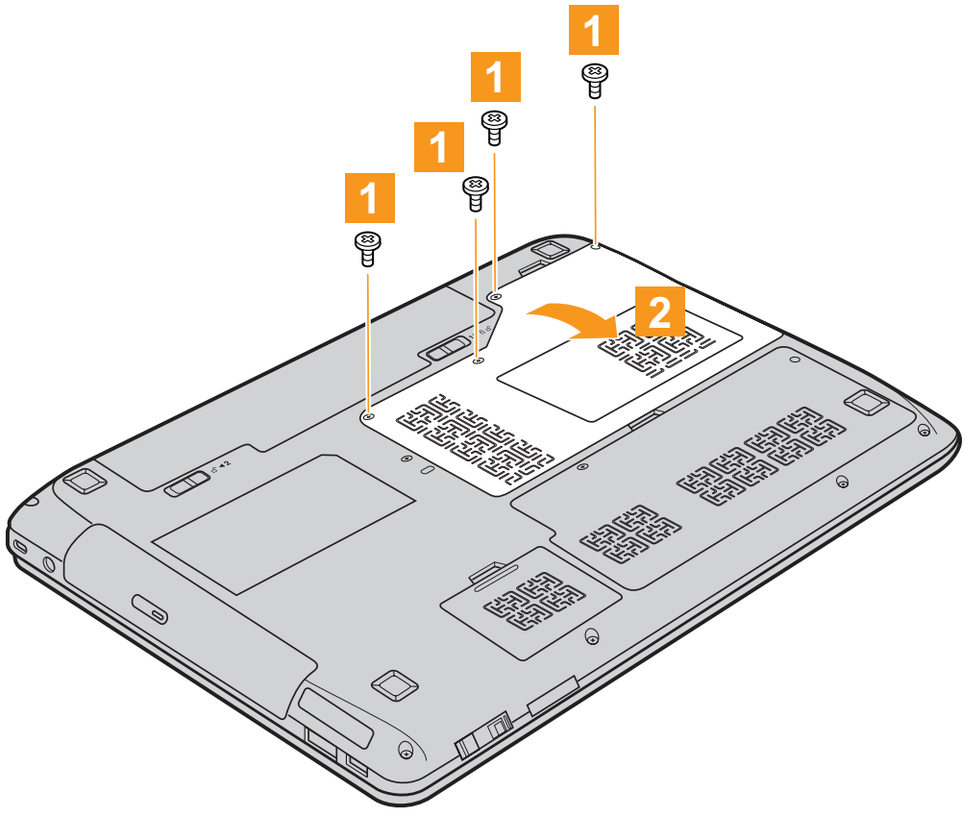

6. If two SO-DIMMs are already installed in the memory slot, remove one of them to make room for the new one by pressing out on the latches on both edges of the socket at the same time. Be sure to save the old SO-DIMM for future use.

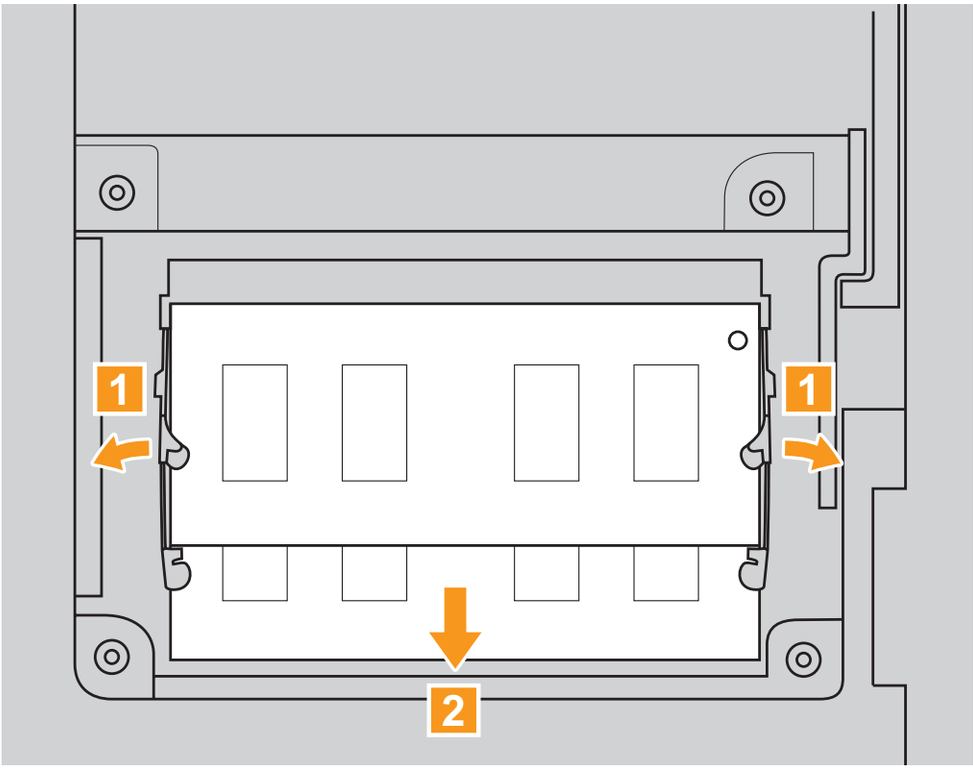

7. Insert the notched end of the DIMM into the socket.

   Press the DIMM firmly, and pivot it until it snaps into place. Make sure that it is firmly fixed in the slot and does not move easily.

8. Reinstall the compartment cover.
9. Reinstall the battery.
10. Turn the computer over, and reconnect the AC adapter and the cables to the computer.

Note: If only one DIMM is used on the computer you are servicing, the card must be installed in SLOT-0 (a : lower slot), but not in SLOT-1 (b : upper slot).

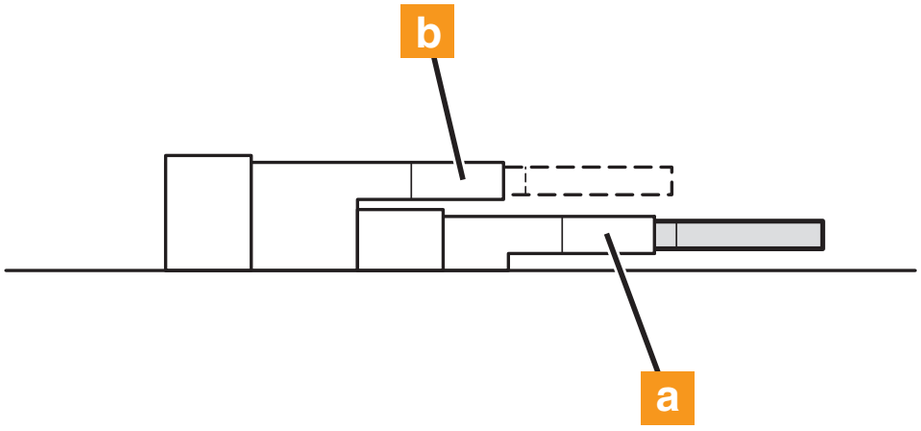

To make sure that the SO-DIMM is installed correctly, do as follows:

1. Turn the computer on.
2. Hold **F2** during startup. The **BIOS Setup Utility** screen opens. The **Total Memory** item shows the total amount of memory installed in your computer.

Replacing the hard disk drive

You can increase the storage capacity of your computer by replacing the hard disk drive with one of greater capacity. You can purchase a new hard disk drive from your reseller or Lenovo marketing representative.

Notes:

- Replace the hard disk drive only if you upgrade it or have it repaired. The connectors and bay of the hard disk drive were not designed for frequent changes, or drive swapping.
- The preinstalled softwares are not included on an optional hard disk drive.

Handling a hard disk drive

- Do not drop the drive or subject it to physical shocks. Put the drive on a material, such as soft cloth, that absorbs the physical shock.
- Do not apply pressure to the cover of the drive.
- Do not touch the connector.

The drive is very sensitive. Incorrect handling can cause damage and permanent loss of data on the hard disk. Before removing the hard disk drive, make a backup copy of all the information on the hard disk, and then turn the computer off. Never remove the drive while the system is operating, in sleep mode, or in hibernation mode.

To replace the hard disk drive, do the following:

1. Turn off the computer; then disconnect the AC adapter and all cables from the computer.
2. Close the computer display, and then turn the computer over.
3. Remove the battery pack.
4. Remove the Hard disk drive compartment cover.
   a. Remove the screws that secure the compartment cover 1.
   b. Remove the compartment cover 2.

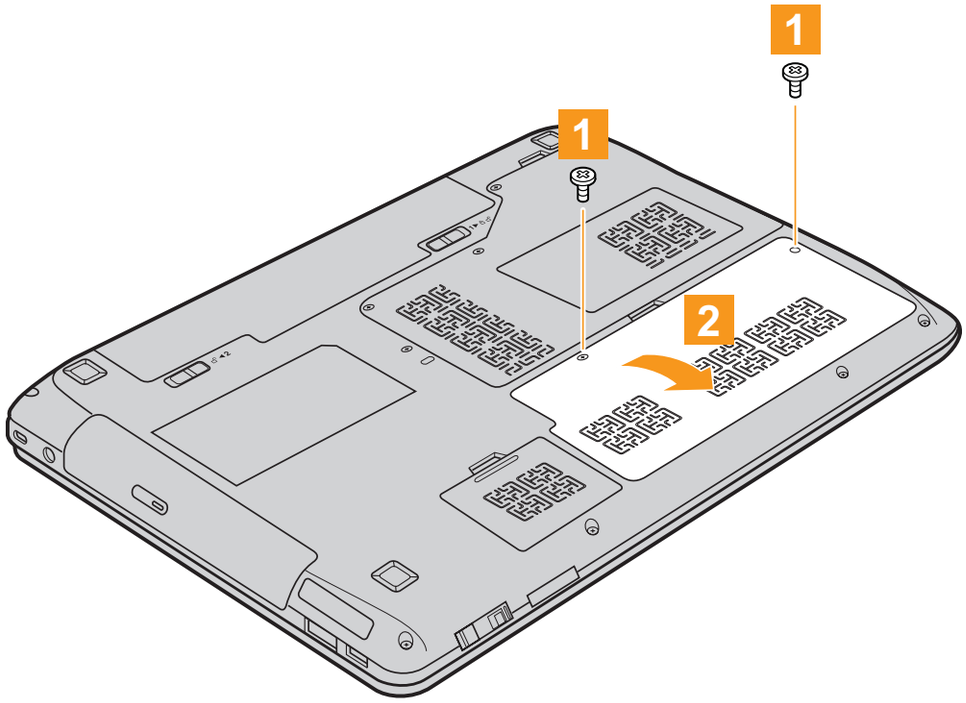

❺ Remove the frame fixing screw.

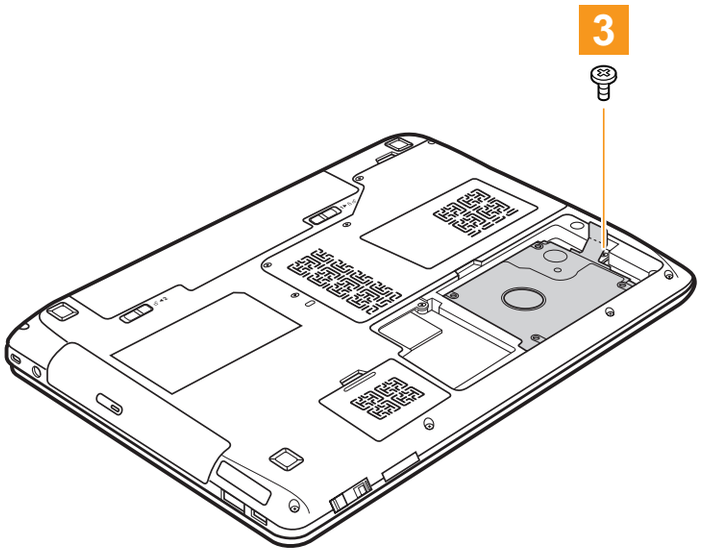

❻ Pull the tab in the direction shown by arrow.

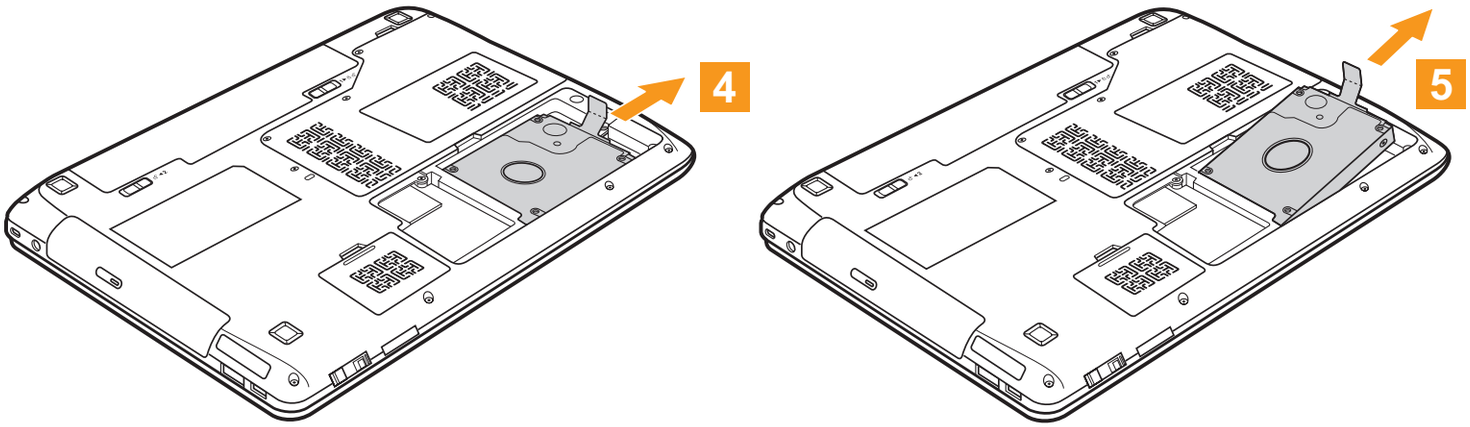

❼ Take out the hard disk drive secured in a metal frame.

❽ Remove the screws and detach the metal frame from the hard disk drive.

9. Attach the metal frame to a new hard disk drive; then tighten the screws.
10. Put the hard disk drive gently into the hard disk drive bay with the tab facing upwards and the connectors facing each other; then push it firmly into space.
11. Reinstall the frame fixing screw.
12. Reinstall the compartment cover.
13. Reinstall the screws.
14. Reinstall the battery pack.
15. Turn the computer over again. Connect the AC adapter and the cables to the computer again.

The following table provides a list of CRUs (Customer Replaceable Units) for your computer, and informs you of where to find replacement instructions.

	Setup Poster	User Guide
AC adapter	O	
Power cord for AC adapter	O	
Battery	O	O
Bottom access doors		O
Memory		O
Hard disk drive		O

Appendix A. Getting help and service

If you need help, service, technical assistance, or just want more information about Lenovo computers, you will find a wide variety of sources available from Lenovo to assist you. This section contains information about where to go for additional information about Lenovo computers, what to do if you experience a problem with your computer, and whom to call for service should it be necessary.

Microsoft Service Packs are the latest software source for Windows product updates. They are available by means of a Web download (connection charges may apply) or from a disc. For more specific information and links, go to the Microsoft Web site at http://www.microsoft.com. Lenovo offers Up and Running technical assistance with installation of, or questions related to, Service Packs for your Lenovo-preinstalled Microsoft Windows product.

Getting help on the Web

The Lenovo Web site on the World Wide Web has up-to-date information about Lenovo computers and support. The address for the Lenovo home page is http://consumersupport.lenovo.com.

You can find support information for your Lenovo IdeaPad™ computer at http://consumersupport.lenovo.com. Research this Web site to learn how to solve problems, find new ways to use your computer, and learn about options that can make working with your Lenovo computer even easier.

Calling the customer support center

If you have tried to correct the problem yourself and still need help, during the warranty period, you can get help and information by telephone through the customer support center. The following services are available during the warranty period:

- Problem determination - Trained personnel are available to assist you with determining if you have a hardware problem and deciding what action is necessary to fix the problem.
- Lenovo hardware repair - If the problem is determined to be caused by Lenovo hardware under warranty, trained service personnel are available to provide the applicable level of service.

- Engineering change management - Occasionally, there might be changes that are required after a product has been sold. Lenovo or your reseller, if authorized by Lenovo, will make selected Engineering Changes (ECs) available that apply to your hardware.

The following items are not covered:

- Replacement or use of parts not manufactured for or by Lenovo or non warranted parts
- Identification of software problem sources
- Configuration of BIOS as part of an installation or upgrade
- Changes, modifications, or upgrades to device drivers
- Installation and maintenance of network operating systems (NOS)
- Installation and maintenance of application programs

To determine if your Lenovo hardware product is under warranty and when the warranty expires, go to http://consumersupport.lenovo.com.

Refer to your Lenovo hardware warranty for a full explanation of Lenovo warranty terms. Be sure to retain your proof of purchase to obtain warranty service.

If possible, be near your computer when you make your call in case the technical assistance representative needs to help you resolve a computer problem. Please ensure that you have downloaded the most current drivers and system updates, and recorded information before you call. When calling for technical assistance, please have the following information available:

- Machine Type and Model
- Serial number of your computer and your proof of purchase
- Description of the problem
- Hardware and software configuration information for your system

Note: For the latest list of customer support center telephone numbers and hours of operation, visit the Support Web site at http://consumersupport.lenovo.com. If the number for your country or region is not listed, contact your Lenovo reseller or Lenovo marketing representative.

Getting help around the world

If you travel with your computer or relocate it to a country where your Lenovo machine type is sold, your computer might be eligible for International Warranty Service, which automatically entitles you to obtain warranty service throughout the warranty period. Service will be performed by service providers authorized to perform warranty service.

Service methods and procedures vary by country, and some services might not be available in all countries. Service centers in certain countries might not be able to service all models of a particular machine type. In some countries, fees and restrictions might apply at the time of service.

To determine whether your computer is eligible for International Warranty Service and to view a list of the countries where service is available, go to http://consumersupport.lenovo.com.

Lenovo warranty service telephone numbers

Warranty Service Telephone Numbers

A list of warranty service telephone numbers is available at www.lenovo.com/support/phone. For the latest warranty service number in a country or region, please contact Lenovo, or your reseller in your country or region.

Appendix B. Use and care information

Caring for your computer

Though your computer is designed to function reliably in normal work environments, you need to use common sense in handling it. By following these important tips, you will get the most use and enjoyment out of your computer.

Be careful about where and how you work.

- Do not eat or smoke over your keyboard. Particles that fall into your keyboard can cause damage.
- Store packing materials safely out of the reach of children to prevent the risk of suffocation from plastic bags.
- Keep your computer away from magnets, activated cellular phones, electrical appliances, or speakers (within 13 cm or 5 in).
- Avoid subjecting your computer to extreme temperatures (below 5°C/41°F or above 35°C/95°F).
- For Notebooks with glossy display bezels the user should consider the placement of the Notebook as the bezel may cause disturbing reflections from surrounding light and bright surfaces.
- Some appliances, such as certain portable desktop fans or air purifiers, can produce negative ions. If a computer is close to such an appliance, and is exposed for an extended time to air containing negative ions, it may become electrostatically charged. Such a charge may be discharged through your hands when you touch the keyboard or other parts of the

computer, or through connectors on I/O devices connected to it. Even though this kind of electrostatic discharge (ESD) is the opposite of a discharge from your body or clothing to the computer, it poses the same risk of a computer malfunction.

Your computer is designed and manufactured to minimize any effects of electrostatic charge. An electrostatic charge above a certain limit, however, can increase the risk of ESD. Therefore, when using the computer close to an appliance that can produce negative ions, give special attention to the following:

- Avoid directly exposing your computer to the air from an appliance that can produce negative ions.
- Keep your computer and peripherals as far as possible from such an appliance.
- Wherever possible, ground your computer to facilitate safe electrostatic discharge.

Notice of static-electricity

When you handle options or CRUs, or perform any work inside the computer, take the following precautions to avoid static-electricity damage:

- Limit your movement. Movement can cause static electricity to build up around you.

- Always handle components carefully. Handle adapters, memory modules, and other circuit boards by the edges. Never touch exposed circuitry.
- Prevent others from touching components.
- When you install a static-sensitive option or CRU, touch the static-protective package containing the part to a metal expansion-slot cover or other unpainted metal surface on the computer for at least two seconds. This reduces static electricity in the package and your body.
- Whenever possible, remove the static-sensitive part from the static-protective packaging and install the part without setting it down. When this is not possible, place the static-protective packaging on a smooth, level surface and place the part on it.
- Do not place the part on the computer cover or other metal surface.

Be gentle with your computer

- Avoid placing any objects (including paper) between the display and the keyboard or under the keyboard.
- Do not drop, bump, scratch, twist, hit, vibrate, push, or place heavy objects on your computer, display, or external devices.
- Avoid turning the display beyond 135°.

Carry your computer properly

- Before moving your computer, be sure to remove any media, turn off attached devices, and disconnect cords and cables.
- Be sure your computer is in sleep or hibernation mode, or turned off, before moving it. This will prevent damage to the hard disk drive and data loss.
- When picking up your open computer, hold it by the bottom. Do not pick up or hold your computer by the display.
- Use a quality carrying case that provides adequate cushion and protection. Do not pack your computer in a tightly packed suitcase or bag.

For outdoor use

- Backup your critical data before you take your computer outdoors.
- Ensure that the battery is full.
- Be sure to turn off the power and close the LCD well.
- When you leave the computer in your car, place it on the back seat to avoid being insolated.
- Carry the AC adapter and power cord with the computer.

Handle storage media and drives properly

- If your computer comes with an optical drive, do not touch the surface of a disc or the lens on the tray.
- Wait until you hear the CD or DVD click into the center pivot of an optical drive before closing the tray.
- When installing your hard disk, follow the instructions shipped with your hardware, and apply pressure only where needed on the device.

Data safety

- Do not delete unknown files or change the name of files or directories that were not created by you; otherwise, your computer software might fail to work.
- Be aware that accessing network resources can leave your computer vulnerable to computer viruses, hackers, spyware, and other malicious activities that might damage your computer, software, or data.
- It is your responsibility to ensure that you have adequate protection in the form of firewalls, antivirus software, and anti-spyware software and keep this software up to date.

Take care in setting passwords

- Remember your passwords. If you forget a supervisor or hard disk password, Lenovo authorized service providers will not reset it, and you might have to replace your system board or hard disk drive.

Other important tips

- Do not put the battery pack in trash that is disposed of in landfills. When disposing of the battery, comply with local ordinances or regulations and your company's safety standards.
- Your computer might have both an Ethernet connector and a modem connector. If so, be sure to connect your communication cable to the correct one, so your connector is not damaged.

- Register your Lenovo products with Lenovo (refer to the Web page: http://consumersupport.lenovo.com). This can help authorities return your computer to you if it is lost or stolen. Registering your computer also enables Lenovo to notify you about possible technical information and upgrades.
- Only an authorized Lenovo repair technician should disassemble and repair your computer.
- Do not modify or tape the latches to keep the display open or closed.
- Take care not to turn your computer over while the AC adapter is plugged in. This could break the adapter plug.
- Turn off your computer if you are replacing a device, or else verify that the device is warm- or hot-swappable.
- Before you install any of the following devices, touch a metal table or a grounded metal object. This action reduces any static electricity from your body. The static electricity could damage the device.
  - Memory Card, such as SD Card, Memory Stick, MultiMediaCard, and Memory Stick Pro card.
  - Memory module
- When transferring data to or from a Flash Media Card, such as an SD card, do not put your computer in sleep or hibernation mode before the data transfer is complete. To do so might cause damage to your data.

Accessibility and comfort

Ergonomic information

Working in the virtual office may mean adapting to frequent changes in your environment. Following some simple rules will make things easier and bring you the maximum benefits of your computer. Keeping in mind such basics as good lighting and proper seating, for example, can help you improve your performance and achieve greater comfort.

Note: This example shows someone in a conventional setting. Even if you work in a casual, less conventional setting, many of the tips in this section still apply. Develop good habits, and they will serve you well.

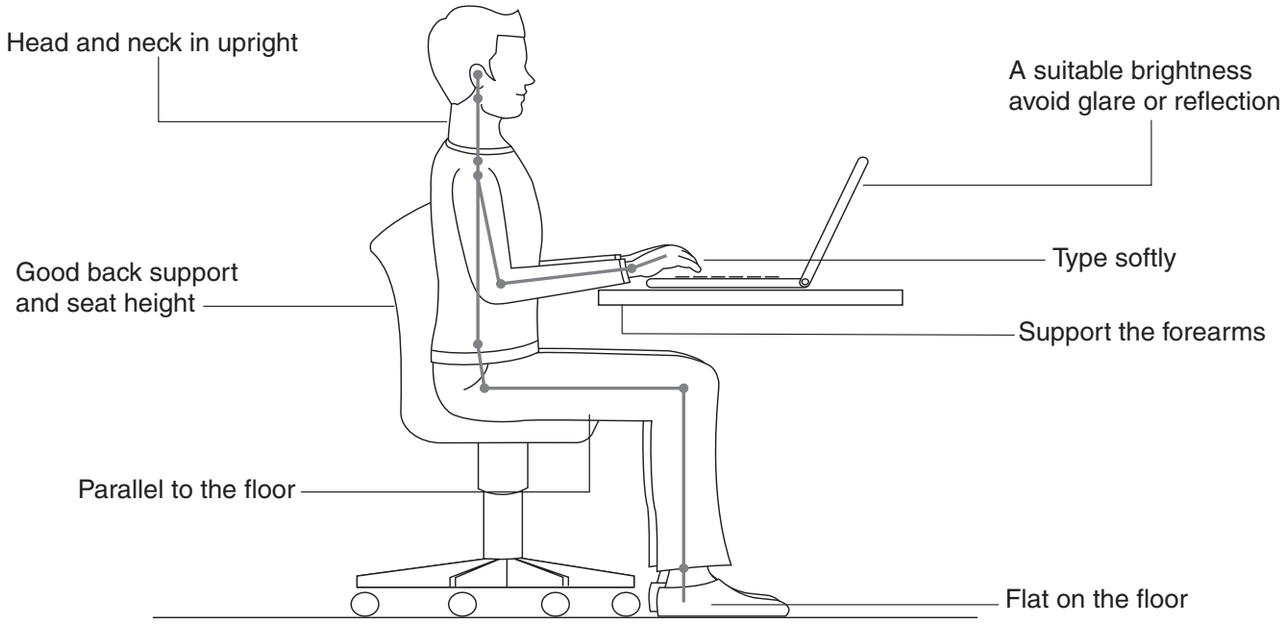

What if you are traveling?

It may not be possible to observe the best ergonomic practices when you are using your computer while on the move or in a casual setting. Regardless of the setting, try to observe as many of the tips as possible. Sitting properly and using adequate lighting, for example, will help you maintain desirable levels of comfort and performance.

Questions about vision?

Your computer's visual display screen is designed to meet the highest standards and to provide you with clear, crisp images and large, bright displays that are easy to see, yet easy on the eyes. Of course, any concentrated and sustained visual activity can be tiring. If you have questions on eye fatigue or visual discomfort, consult a vision care specialist for advice.

Maintenance

An important part of owning your computer is maintenance. With proper care, you can avoid common problems. The following sections provide information that can help you to keep your computer running smoothly.

General tips for maintenance

1. Check the capacity of your hard disk drive from time to time. If the hard disk drive gets too full, Windows® will slow down and might produce errors.
2. Empty your recycle bin on a regular basis.
3. Use the Microsoft Disk Defragmenter on your hard disk drive on a regular basis to improve data seek and read time.

- To free up disk space, uninstall unused application programs.
- Clean out your Inbox, Sent, and Trash folders from your e-mail client program.
- At least once a week, make a point to back up your data. If critical data is present, it is a good idea to perform a daily backup. Lenovo has many backup options available for your computer. CD-RW drives or CD-RW/DVD drives are available for most computers.
- Use or schedule System Restore to take a system snapshot periodically.

Note: Always take a system snapshot before installing new drivers, updating software, or installing new software.

- Update device drivers and BIOS when needed.
- Profile your machine at http://consumersupport.lenovo.com to keep up to date with current drivers and revisions.
- Keep up to date on device drivers on other non-Lenovo hardware. You might want to read the device driver information release notes prior to updating for compatibility or known issues.
- Keep a log book. Entries might include major hardware or software changes, driver updates, minor issues you have experienced and how you resolved them.
- If you ever need to run a recovery operation on your computer by OneKey Rescue System, see “Chapter 4. OneKey Rescue System” on page 40.
- If required, you can find your country’s customer support center at the following Web address: http://consumersupport.lenovo.com.
  When calling the customer support center, please make sure you have your machine type, model, and serial number available and the computer is in front of you. Also, if the machine is producing error codes, it is helpful to have the error screen on or the message written down.

Cleaning the cover of your computer

Occasionally clean your computer as follows:

1. Prepare a mixture of a gentle kitchen-use detergent (one that does not contain abrasive powder or strong chemicals such as acid or alkaline). Use 5 parts water to 1 part detergent.
2. Absorb the diluted detergent into a sponge.
3. Squeeze excess liquid from the sponge.
4. Wipe the cover with the sponge, using a circular motion and taking care not to let any excess liquid drip.
5. Wipe the surface to remove the detergent.
6. Rinse the sponge with clean running water.
7. Wipe the cover with the clean sponge.
8. Wipe the surface again with a dry, soft lint-free cloth.
9. Wait for the surface to dry completely and remove any cloth fibers from the computer surface.

Note: Shut down the computer and then disconnect the power cord before cleaning the computer.

Cleaning your computer keyboard

1. Absorb some isopropyl rubbing alcohol on a soft, dust-free cloth.
2. Wipe each keytop surface with the cloth. Wipe the keys one by one; if you wipe several keys at a time, the cloth may hook onto an adjacent key and possibly damage it. Make sure that no liquid drips onto or between the keys.
3. Allow to dry.
4. To remove any crumbs and dust from beneath the keys, you can use a camera blower with a brush or cool air from a hair drier.

Note: Avoid spraying cleaner directly on the display or the keyboard.

Cleaning your computer display

1. Gently wipe the display with a dry, soft lint-free cloth. If you see a scratchlike mark on your display, it might be a stain transferred from the keyboard when the cover was pressed from the outside.
2. Wipe or dust the stain gently with a soft, dry cloth.
3. If the stain remains, moisten a soft, lint-free cloth with water or a 50-50 mixture of isopropyl alcohol and water that does not contain impurities.
4. Wring out as much of the liquid as you can.
5. Wipe the display again; do not let any liquid drip into the computer.
6. Be sure to dry the display before closing it.

Appendix C. Lenovo limited warranty

L505-0010-01 04/2008

This Lenovo Limited Warranty applies only to Lenovo branded hardware products you purchased for your own use and not for resale.

This Lenovo Limited Warranty is available in other languages at www.lenovo.com/warranty.

What this warranty covers

Lenovo warrants that each hardware product that you purchase is free from defects in materials and workmanship under normal use during the warranty period. The warranty period for the product starts on the original date of purchase specified on your sales receipt or invoice unless Lenovo informs you otherwise in writing. The warranty period and type of warranty service that apply to your product are designated below under the section titled **"Warranty Information."**

THIS WARRANTY IS YOUR EXCLUSIVE WARRANTY AND REPLACES ALL OTHER WARRANTIES OR CONDITIONS, EXPRESS OR IMPLIED, INCLUDING, BUT NOT LIMITED TO, THE IMPLIED WARRANTIES OR CONDITIONS OF MERCHANTABILITY AND FITNESS FOR A PARTICULAR PURPOSE. SOME STATES OR JURISDICTIONS DO NOT ALLOW THE EXCLUSION OF EXPRESS OR IMPLIED WARRANTIES, SO THE ABOVE EXCLUSION MAY NOT APPLY TO YOU. IN THAT EVENT, SUCH WARRANTIES APPLY ONLY TO THE EXTENT REQUIRED BY LAW AND ARE LIMITED IN DURATION TO THE WARRANTY PERIOD. NO WARRANTIES APPLY AFTER THAT

PERIOD. SOME STATES OR JURISDICTIONS DO NOT ALLOW LIMITATIONS ON HOW LONG AN IMPLIED WARRANTY LASTS, SO THE ABOVE LIMITATION ON DURATION MAY NOT APPLY TO YOU.

How to obtain warranty service

If the product does not function as warranted during the warranty period, you may obtain warranty service by contacting Lenovo or an approved service provider. Each of them is referred to as a "Service Provider." A list of Service Providers and their telephone numbers is available at www.lenovo.com/support/phone.

Warranty service may not be available in all locations and may differ from location to location. Charges may apply outside a Service Provider's normal service area. Contact a local Service Provider for location-specific information.

What your service provider will do to correct problems

When you contact a Service Provider, you must follow the problem determination and resolution procedures specified.

Your Service Provider will attempt to diagnose and resolve your problem over the telephone, e-mail or through remote assistance. Your Service Provider may direct you to download and install designated software updates.

Some problems can be resolved with a replacement part that you can install yourself called a “Customer Replaceable Unit” or “CRU.” If so, your Service Provider will ship the CRU to you for you to install.

If your problem cannot be resolved over the telephone or remotely, through your application of software updates or the installation of a CRU by you, your Service Provider will arrange for service under the type of warranty service designated for the product under the section titled **“Warranty Information.”**

If your Service Provider determines that it is unable to repair your product, your Service Provider will replace it with one that is at least functionally equivalent.

If your Service Provider determines that it is unable to either repair or replace your product, your sole remedy is to return the product to your place of purchase or to Lenovo for a refund of your purchase price.

Replacement of a product or part

When the warranty service involves the replacement of a product or part, the replaced product or part becomes Lenovo's property and the replacement product or part becomes your property. Only unaltered Lenovo products and parts are eligible for replacement. The replacement product or part provided by Lenovo may not be new, but it will be in good working order and at least functionally equivalent to the original product or part. The replacement product or part shall be warranted for the balance of the period remaining on the original product.

Before your Service Provider replaces a product or part, you agree to:

1. remove all features, parts, options, alterations, and attachments not under warranty service;
2. ensure that the product or part is free of any legal obligations or restrictions that prevent its replacement; and
3. obtain authorization from the owner to have your Service Provider service a product or part if you do not own it.

Your additional responsibilities

Where applicable, before service is provided, you agree to:

1. follow the service request procedures that your Service Provider specifies;
2. backup or secure all programs and data contained in the product;
3. provide your Service Provider with all system keys or passwords and sufficient, free, and safe access to your facilities to perform service; and
4. ensure that all information about identified or identifiable individuals ("Personal Data") is deleted from the product or that, with respect to any Personal Data that you did not delete, you are in compliance with all applicable laws.

Use of personal information

If you obtain service under this warranty, Lenovo will store, use and process information about your warranty service and your contact information, including name, phone numbers, address, and e-mail address. Lenovo will use this information to perform service under this warranty and to improve our business relationship with you. We may contact you to inquire about your satisfaction regarding our warranty service or to notify you about any product recalls or safety issues. In accomplishing these purposes, we may transfer your information to any country where we do business and may provide it to entities acting on our behalf. We may also disclose it where required by law.

What this warranty does not cover

This warranty does not cover the following:

- uninterrupted or error-free operation of a product;
- loss of, or damage to, your data;
- any software programs, whether provided with the product or installed subsequently;
- failure or damage resulting from misuse, accident, modification, unsuitable physical or operating environment, natural disasters, power surges, or improper maintenance by you;
- damage caused by a non-authorized service provider;
- failure of, or damage caused by, any third party products, including those that Lenovo may provide or integrate into the Lenovo product at your request; and
- any technical or other support, such as assistance with “how-to” questions and those regarding product set-up and installation.

This warranty is voided by removal or alteration of identification labels on the product or its parts.

Limitation of liability

Lenovo is responsible for loss or damage to your product only while it is: 1) in your Service Provider's possession; or 2) in transit in those cases where the Service Provider is responsible for the transportation.

Neither Lenovo nor your Service Provider is responsible for any of your data including confidential, proprietary, or personal data contained in a product. You should remove and/or backup all such information from the product prior to its service or return.

Circumstances may arise where, because of a default on Lenovo's part or other liability, you may be entitled to recover damages from Lenovo. In each such instance, regardless of the basis of your claim against Lenovo (including breach, negligence, misrepresentation, or other contract or tort claim), except and to the extent that liability cannot be waived or limited by applicable laws, Lenovo shall not be liable for more than the amount of actual direct damages suffered by you, up to the amount you paid for the product. This limit does not apply to damages for bodily injury (including death) and damage to real property or tangible personal property for which Lenovo is liable under law.

This limit also applies to Lenovo's suppliers, resellers, and your Service Provider. It is the maximum amount for which Lenovo, its suppliers, resellers, and your Service Provider are collectively responsible.

UNDER NO CIRCUMSTANCES SHALL LENOVO, ITS SUPPLIERS, RESELLERS, OR SERVICE PROVIDERS BE LIABLE FOR ANY OF THE FOLLOWING EVEN IF INFORMED OF THEIR POSSIBILITY: 1) THIRD PARTY CLAIMS AGAINST YOU FOR DAMAGES; 2) LOSS OR DAMAGE TO YOUR DATA; OR 3) SPECIAL, INCIDENTAL, INDIRECT OR CONSEQUENTIAL DAMAGES, INCLUDING LOST PROFITS, BUSINESS REVENUE, GOODWILL OR ANTICIPATED SAVINGS. AS SOME STATES OR JURISDICTIONS DO NOT ALLOW THE EXCLUSION OR LIMITATION OF INCIDENTAL OR CONSEQUENTIAL DAMAGES, THE ABOVE LIMITATION OR EXCLUSION MAY NOT APPLY TO YOU.

Dispute resolution

If you acquired the product in **Cambodia**, **Indonesia**, **Philippines**, **Vietnam** or **Sri Lanka**, disputes arising out of or in connection with this warranty shall be finally settled by arbitration held in Singapore and this warranty shall be governed, construed and enforced in accordance with the laws of Singapore, without regard to conflict of laws. If you acquired the product in **India**, disputes arising out of or in connection with this warranty shall be finally settled by arbitration held in Bangalore, India. Arbitration in Singapore shall be held in accordance with the Arbitration Rules of Singapore International Arbitration Center ("SIAC Rules") then in effect. Arbitration in India shall be held in accordance with the laws of India then in effect. The arbitration award shall be final and binding on the parties without appeal. Any award shall be in writing and set forth the findings of fact and the conclusions of law. All

arbitration proceedings, including all documents presented in such proceedings, shall be conducted in the English language, and the English language version of this warranty prevails over any other language version in such proceedings.

Other rights

THIS WARRANTY GIVES YOU SPECIFIC LEGAL RIGHTS AND YOU MAY HAVE OTHER RIGHTS WHICH VARY FROM STATE TO STATE OR JURISDICTION TO JURISDICTION. YOU MAY ALSO HAVE OTHER RIGHTS UNDER APPLICABLE LAW OR WRITTEN AGREEMENT WITH LENOVO. NOTHING IN THIS WARRANTY AFFECTS STATUTORY RIGHTS, INCLUDING RIGHTS OF CONSUMERS UNDER NATIONAL LEGISLATION GOVERNING THE SALE OF CONSUMER GOODS THAT CANNOT BE WAIVED OR LIMITED BY CONTRACT.

European Economic Area (EEA)

Customers in the EEA may contact Lenovo at the following address: EMEA Service Organisation, Lenovo (International) B.V., Floor 2, Einsteinova 21, 851 01, Bratislava, Slovakia. Service under this warranty for Lenovo hardware products purchased in EEA countries may be obtained in any EEA country in which the product has been announced and made available by Lenovo.

Lenovo Turkey address

LENOVO TECHNOLOGY B.V.
TURKIYE ISTANBUL SUBESI
Beybi Giz Plaza, Dereboyu cad., Meydan Sok.,
No:28, Kat:10, Daire 35 Maslak
Posta Kodu: 34398
Tel : 3658900-99
Fax: 2902750

Warranty information

Product or machine type	Country or region of purchase	Warranty period	Type of warranty service
notebook: 20037, 0633	Korea, Taiwan	parts and labor - 1 year battery pack - 1 year	3, 4
	India, China (Hong Kong S.A.R.), China (Macau S.A.R.)		1, 4
	Indonesia, Malaysia, Singapore, Thailand, Philippines, Vietnam, South Africa, France, United states of America, Canada, Mexico, Argentina, Brazil, Austria, Belgium, Denmark, Finland, Germany, Israel, Ireland, Italy, Netherlands, Norway, Spain, Sweden, Switzerland, UK, Lithuania, Latvia, Croatia, Egypt, Greece, Romania, Saudi Arabia, UAE, Lithuania, Cyprus, Slovenia, Estonia, Luxembourg, Iceland, Colombia, Peru, Venezuela, Bolivia, Uruguay, Chile, Paraguay, Ecuador		
	Australia, New Zealand, Japan		1, 3
	Russia, Ukraine, the republic of Kazakhstan	parts and labor - 2 years battery pack - 1 year	4
	Sri Lanka	parts and labor - 1 year battery pack - 1 year	4
	Poland, Turkey, Czech Republic, Hungary, Slovakia, Bulgaria	parts and labor - 2 years battery pack - 1 year	1, 4

If required, your Service Provider will provide repair or exchange service depending on the type of warranty service specified for your product and the available service. Scheduling of service will depend upon the time of your call, parts availability, and other factors.

Types of warranty service

❶ Customer Replaceable Unit (“CRU”) Service

Under CRU Service, your Service Provider will ship CRUs to you for installation by you. CRU information and replacement instructions are shipped with your product and are available from Lenovo at any time upon request. CRUs that are easily installed by you are called Self-service CRUs, while Optional-service CRUs may require some technical skill and tools. Installation of Self-service CRUs is your responsibility. You may request that a Service Provider install Optional-service CRUs under one of the other types of warranty service designated for your product. An optional service offering may be available for purchase from Lenovo to have Lenovo install Self-service CRUs for you. You may find a list of CRUs and their designation in the publication that ships with your product or at www.lenovo.com/CRUs. The requirement to return a defective CRU, if any, will be specified in the materials shipped with a replacement CRU. When return is required: 1) return instructions, a prepaid return shipping label, and a container will be included with the replacement CRU; and 2) you may be charged for the replacement CRU if your Service Provider does not receive the defective CRU within thirty (30) days of your receipt of the replacement.

❷ On-site Service

Under On-Site Service, your Service Provider will either repair or exchange the product at your location. You must provide a suitable working area to allow disassembly and reassembly of the Lenovo product. For some products, certain repairs may require your Service Provider to send the product to a designated service center.

❸ Courier or Depot Service

Under Courier or Depot Service, your product will be repaired or exchanged at a designated service center, with shipping arranged by your Service Provider. You are responsible for disconnecting the product. A shipping container will be provided to you for you to return your product to a designated service center. A courier will pick up your product and deliver it to the designated service center. Following its repair or exchange, the service center will arrange the return delivery of the product to you.

❹ Customer Carry-In or Mail-In Service

Under Customer Carry-In or Mail-In Service, your product will be repaired or exchanged at a designated service center, with delivery or shipping arranged by you. You are responsible to deliver or mail, as your Service Provider specifies, (prepaid by you unless specified otherwise) the product, suitably packaged to a designated location. After the product has been repaired or exchanged, it will be made available for your collection. Failure to collect the product may result in your Service Provider disposing of the

product as it sees fit. For Mail-in Service, the product will be returned to you at Lenovo's expense, unless your Service Provider specifies otherwise.

❺ Product Exchange Service

Under Product Exchange Service, Lenovo will ship a replacement product to your location. You are responsible for its installation and verification of its operation. The replacement product becomes your property in exchange for the failed product, which becomes the property of Lenovo. You must pack the failed product in the shipping carton used to ship the replacement product and return it to Lenovo. Transportation charges, both ways, are paid by Lenovo. Failure to use the carton in which the replacement product was received may result in your responsibility for damage to the failed product during shipment. You may be charged for the replacement product if Lenovo does not receive the failed product within thirty (30) days of your receipt of the replacement product.

Appendix D. Customer replaceable units (CRUs)

Customer Replaceable Units (CRUs) are computer parts that can be upgraded or replaced by the customer. There are two types of CRUs: *internal* and *external*. External CRUs are easy to install, whereas internal CRUs require some technical skills and in some cases might require tools such as a screwdriver. However, both internal and external CRUs are safe for removal by the customer.

Customers are responsible for replacing all external CRUs. Internal CRUs can be removed and installed by customers or by a Lenovo service technician during the warranty period.

Your computer contains the following types of external CRUs:

- **External CRUs (pluggable):** These CRUs unplug from the computer. Examples of these types of CRUs include the AC adapter and power cord.
- **External CRUs with latches:** These CRUs include a latch to help you remove and replace the part. Examples of these types of CRUs include the notebook main battery and a hard-disk drive.

Your computer contains the following types of internal CRUs:

- **Internal CRUs (located behind an access panel):** These CRUs are isolated parts within the computer that are concealed by an access panel that is typically secured by either one or two screws. Once the access panel is removed, only the specific CRU is visible. Examples of these types of CRUs include memory modules and hard disk drives.
- **Internal CRUs (located within the product):** These CRUs are accessible only by opening the computer's outer case. Examples of these CRUs include PCI Express Mini Cards and the integrated keyboard.

Appendix E. Notices

Notices

Lenovo may not offer the products, services, or features discussed in this document in all countries. Consult your local Lenovo representative for information on the products and services currently available in your area. Any reference to a Lenovo product, program, or service is not intended to state or imply that only that Lenovo product, program, or service may be used. Any functionally equivalent product, program, or service that does not infringe any Lenovo intellectual property right may be used instead. However, it is the user's responsibility to evaluate and verify the operation of any other product, program, or service.

Lenovo may have patents or pending patent applications covering subject matter described in this document. The furnishing of this document does not give you any license to these patents. You can send license inquiries, in writing, to:

Lenovo (United States), Inc.
1009 Think Place - Building One
Morrisville, NC 27560
U.S.A.
Attention: Lenovo Director of Licensing

LENOVO PROVIDES THIS PUBLICATION "AS IS" WITHOUT WARRANTY OF ANY KIND, EITHER EXPRESS OR IMPLIED, INCLUDING, BUT NOT LIMITED TO, THE IMPLIED WARRANTIES OF NON-INFRINGEMENT, MERCHANTABILITY OR FITNESS FOR A PARTICULAR PURPOSE. Some jurisdictions do not allow disclaimer of

express or implied warranties in certain transactions, therefore, this statement may not apply to you.

This information could include technical inaccuracies or typographical errors. Changes are periodically made to the information herein; these changes will be incorporated in new editions of the publication. Lenovo may make improvements and/or changes in the product(s) and/or the program(s) described in this publication at any time without notice.

The products described in this document are not intended for use in implantation or other life support applications where malfunction may result in injury or death to persons. The information contained in this document does not affect or change Lenovo product specifications or warranties. Nothing in this document shall operate as an express or implied license or indemnity under the intellectual property rights of Lenovo or third parties. All information contained in this document was obtained in specific environments and is presented as an illustration. The result obtained in other operating environments may vary.

Lenovo may use or distribute any of the information you supply in any way it believes appropriate without incurring any obligation to you.

Any references in this publication to non-Lenovo Web sites are provided for convenience only and do not in any manner serve as an endorsement of those Web sites. The materials at those Web sites are not part of the materials for this Lenovo product, and use of those Web sites is at your own risk.

Any performance data contained herein was determined in a controlled environment. Therefore, the result obtained in other operating environments may vary significantly. Some measurements may have been

made on development-level systems and there is no guarantee that these measurements will be the same on generally available systems. Furthermore, some measurements may have been estimated through extrapolation. Actual results may vary. Users of this document should verify the applicable data for their specific environment.

The software interface and hardware configuration described in all the manuals included with your computer may not match the actual configuration of the computer you purchased.

Export classification notice

This product is subject to the United States Export Administration Regulations (EAR) and has an Export Classification Control Number (ECCN) of 4A994.b. It can be re-exported except to any of the embargoed countries in the EAR E1 country list.

ENERGY STAR model information

ENERGY STAR® is a joint program of the U.S. Environmental Protection Agency and the U.S. Department of Energy aimed at saving money and protecting the environment through energy efficient products and practices.

Lenovo® is proud to offer our customers products with an ENERGY STAR compliant designation. Lenovo computers of the following machine types, if the ENERGY STAR mark is affixed, have been designed and tested to conform to the ENERGY STAR 5.0 program requirements for computers.

- 20037
- 0633

By using ENERGY STAR compliant products and taking advantage of the power-management features of your computer, you reduce the consumption of electricity. Reduced electrical consumption contributes to potential financial savings, a cleaner environment, and the reduction of greenhouse gas emissions.

For more information about ENERGY STAR, visit

http://www.energystar.gov.

Lenovo encourages you to make efficient use of energy an integral part of your day-to-day operations. To help in this endeavor, Lenovo has preset the following power-management features to take effect when your computer has been inactive for a specified duration:

Table 1. ENERGY STAR power-management features, by operating system

Windows® 7
Power plan: Energy Star • Turn off the display: After 10 minutes • Put the computer to sleep: After 25 minutes • Advanced power settings: - Turn off hard disks: After 20 minutes - Hibernate: After 1 hour

To awaken your computer from a Sleep mode, press any key on your keyboard. For more information about these settings, refer to your Windows Help and Support information system.

Wireless related information

Wireless interoperability

Wireless LAN PCI Express Mini Card is designed to be interoperable with any wireless LAN product that is based on Direct Sequence Spread Spectrum (DSSS), Complementary Code Keying (CCK), and/or Orthogonal Frequency Division Multiplexing (OFDM) radio technology, and is compliant to:

- The IEEE 802.11a/b/g/n Standard on Wireless LANs, as defined and approved by the Institute of Electrical and Electronics Engineers.
- The Wireless Fidelity (WiFi) certification as defined by the Wi-Fi Alliance.

Bluetooth Daughter Card is designed to be interoperable with any *Bluetooth* product that is compliant to *Bluetooth* Specification 2.1 + EDR as defined by the *Bluetooth* SIG. Following profiles are supported by *Bluetooth* Daughter Card:

- Generic Access
- Service Discovery
- Serial Port
- Dial-up Networking
- FAX
- LAN Access using PPP
- Personal Area Network

- Generic Object Exchange
- Generic Object Push
- File Transfer
- Synchronization
- Audio Gateway
- Headset
- Printer
- Human Interface Devices (Keyboard/Mouse)
- Basic Image
- Handsfree
- AV

Usage environment and your health

Wireless LAN PCI Express Mini Card and *Bluetooth* Daughter Card emit radio frequency electromagnetic energy like other radio devices. However, the level of energy emitted is far much less than the electromagnetic energy emitted by wireless devices like for example mobile phones.

Due to the fact that wireless LAN PCI Express Mini Card and *Bluetooth* Daughter Card operate within the guidelines found in radio frequency safety standards and recommendations, Lenovo believes the integrated wireless cards are safe for use by consumers. These standards and recommendations reflect the consensus of the scientific community and

result from deliberations of panels and committees of scientists who continually review and interpret the extensive research literature.

In some situation or environment, the use of wireless LAN PCI Express Mini Card or *Bluetooth* Daughter Card may be restricted by the proprietor of the building or responsible representatives of the organization. These situations may for example include:

- Using the integrated wireless cards on board of airplanes, or in hospitals.
- In any other environment where the risk of interference to other devices or services is perceived or identified as harmful.

If you are uncertain of the policy that applies on the use of wireless devices in a specific organization (e.g. airport or hospital), you are encouraged to ask for authorization to use wireless LAN PCI Express Mini Card or *Bluetooth* Daughter Card prior to turning on the computer.

Safety information related to Mobile Broadband

1. Do not use the Mobile Broadband feature on your computer in highly flammable areas (e.g. gas station) or near blasting. Though it is rare, the Mobile Broadband module, like other cellular network devices, could generate a spark.
2. Avoid using Mobile Broadband feature outdoors during a thunderstorm.

3. Use of mobile devices on board aircraft is explicitly prohibited by many airlines companies, especially during take-off and landing. The built-in Mobile Broadband module on your computer is a low-power radio transceiver. When it is turned on, it intermittently receives and transmits radio frequency (RF) energy which could cause interference with the operation of the airplane communication or navigation system. Refer to rules or regulations of your airline company for Mobile Broadband use. Never enable Mobile Broadband feature on your computer unless you are explicitly permitted to do so.
4. Follow restrictions when using your computer in hospitals. Some equipments in hospitals are sophisticated and are susceptible to electromagnetic interference. Do not enable Mobile Broadband feature near medical equipment without requesting permission.
5. The Mobile Broadband communication may affect the operation of implanted cardiac pacemakers and other medically implanted equipment. Patients with cardiac pacemakers should be well aware that use of Mobile Broadband feature on this computer may cause the implanted device to malfunction. If patients have any doubt that there is interference taking place, immediately disable the wireless radio on the computer and contact the doctor for more information.
6. The Mobile Broadband module embedded in your computer does not support voice calls, hence their use for essential communications is not possible. Therefore you should never rely upon the device for essential communications.

Electronic emissions notices

The following information refers to Lenovo IdeaPad Y460, machine type 20037 0633.

Federal Communications Commission (FCC) Statement

This equipment has been tested and found to comply with the limits for a Class B digital device, pursuant to Part 15 of the FCC Rules. These limits are designed to provide reasonable protection against harmful interference in a residential installation. This equipment generates, used, and can radiate radio frequency energy and, if not installed and used in accordance with the instructions, may cause harmful interference to radio communications. However, there is no guarantee the interference will not occur in a particular installation. If this equipment does cause harmful interference to radio or television reception, which can be determined by turning the equipment off and on, the user is encouraged to try to correct the interference by one or more of the following measures:

- Reorient or relocate the receiving antenna.
- Increase the separation between the equipment and receiver.
- Connect the equipment into an outlet on a circuit different from that to which the receiver is connected.
- Consult an authorized dealer or service representative for help.

Properly shielded and grounded cables and connectors must be used in order to meet FCC emission limits. Proper cables and connectors are

available from Lenovo authorized dealers. Lenovo is not responsible for any radio or television interference caused by using other than recommended cables or connectors or by unauthorized changes or modifications to this equipment. Unauthorized changes or modifications could void the user's authority to operate the equipment.

This device complies with Part 15 of the FCC Rules. Operation is subject to the following two conditions: (1) this device may not cause harmful interference, and (2) this device must accept any interference received, including interference that may cause undesired operation.

Responsible party:

Lenovo (United States) Incorporated
1009 Think Place - Building One
Morrisville, NC 27560

U.S.A.
Telephone: (919) 294-5900

Industry Canada Class B Emission Compliance Statement

This Class B digital apparatus complies with Canadian ICES-003.

Avis de conformité à la réglementation d'Industrie Canada

Cet appareil numérique de la classe B est conforme à la norme NMB-003 du Canada.

German Class B Compliance Statement

Deutschsprachiger EU Hinweis:

Hinweis für Geräte der Klasse B EU-Richtlinie zur Elektromagnetischen Verträglichkeit

Dieses Produkt entspricht den Schutzanforderungen der EU-Richtlinie 2004/108/EG (früher 89/336/EWG) zur Angleichung der Rechtsvorschriften über die elektromagnetische Verträglichkeit in den EU-Mitgliedsstaaten und hält die Grenzwerte der EN 55022 Klasse B ein.

Um dieses sicherzustellen, sind die Geräte wie in den Handbüchern beschrieben zu installieren und zu betreiben. Des Weiteren dürfen auch nur von der Lenovo empfohlene Kabel angeschlossen werden. Lenovo übernimmt keine Verantwortung für die Einhaltung der Schutzanforderungen, wenn das Produkt ohne Zustimmung der Lenovo verändert bzw. wenn Erweiterungskomponenten von Fremdherstellern ohne Empfehlung der Lenovo gesteckt/eingebaut werden.

Deutschland:

Einhaltung des Gesetzes über die elektromagnetische Verträglichkeit von Betriebsmittein

Dieses Produkt entspricht dem “Gesetz über die elektromagnetische Verträglichkeit von Betriebsmitteln” EMVG (früher “Gesetz über die elektromagnetische Verträglichkeit von Geräten”). Dies ist die Umsetzung der EU-Richtlinie 2004/108/EG (früher 89/336/EWG) in der Bundesrepublik Deutschland.

Zulassungsbescheinigung laut dem Deutschen Gesetz über die elektromagnetische Verträglichkeit von Betriebsmitteln, EMVG vom 20. Juli 2007 (früher Gesetz über die elektromagnetische Verträglichkeit von Geräten), bzw. der EMV EG Richtlinie 2004/108/EC (früher 89/336/EWG), für Geräte der Klasse B.

Dieses Gerät ist berechtigt, in Übereinstimmung mit dem Deutschen EMVG das EG-Konformitätszeichen - CE - zu führen. Verantwortlich für die Konformitätserklärung nach Paragraf 5 des EMVG ist die Lenovo (Deutschland) GmbH, Gropiusplatz 10, D-70563 Stuttgart.

Informationen in Hinsicht EMVG Paragraf 4 Abs. (1) 4:

Das Gerät erfüllt die Schutzanforderungen nach EN 55024 und EN 55022 Klasse B.

European Union Compliance Statement Class B Compliance

European Union - Compliance to the Electromagnetic Compatibility Directive

CE

This product is in conformity with the protection requirements of EU Council Directive 2004/108/EC on the approximation of the laws of the Member States relating to electromagnetic compatibility. Lenovo cannot accept responsibility for any failure to satisfy the protection requirements resulting from a non-recommended modification of the product, including the installation of option cards from other manufacturers.

This product has been tested and found to comply with the limits for Class B Information Technology Equipment according to European Standard EN 55022. The limits for Class B equipment were derived for typical residential environments to provide reasonable protection against interference with licensed communication devices.

Properly shielded and grounded cables and connectors must be used in order to reduce the potential for causing interference to radio and TV communications and to other electrical or electronic equipment. Such cables and connectors are available from Lenovo authorized dealers. Lenovo cannot accept responsibility for any interference caused by using other than recommended cables and connectors.

Lenovo Product Service Information

台灣 Lenovo 產品服務資訊如下:

荷蘭商聯想股份有限公司台灣分公司

台北市信義區信義路五段七號十九樓之一

服務電話: 0800-000-700

Japanese VCCI Class B Statement

この装置は、情報処理装置等電波障害自主規制協議会（ＶＣＣＩ）の基準に基づくクラスＢ情報技術装置です。この装置は、家庭環境で使用することを目的としていますが、この装置がラジオやテレビジョン受信機に近接して使用されると、受信障害を引き起こすことがあります。

取扱説明書に従って、正しい取り扱いをして下さい。

Japan Compliance Statement for Power line Harmonics

A statement of compliance to the IEC 61000-3-2 harmonics standard is required for all products connecting to the power mains and rated less than 20A per phase.

日本の定格電流が 20A/相 以下の機器に対する高調波電流規制

高調波電流規格 JIS C 61000-3-2 適合品

Korea Class B

이 기기는 가정용으로 전자파적합등록을 한 기기로서 주거 지역에서는 물론 모든 지역에서 사용할 수 있 습니다.

WEEE and recycling statements

General recycling statement

Lenovo encourages owners of information technology (IT) equipment to responsibly recycle their equipment when it is no longer needed. Lenovo offers a variety of programs and services to assist equipment owners in recycling their IT products. Information on product recycling offerings can be found on Lenovo's Internet site at http://www.lenovo.com/lenovo/environment/recycling/

Turkish statement of compliance

The Lenovo product meets the requirements of the Republic of Turkey Directive on the Restriction of the Use of Certain Hazardous Substances in Electrical and Electronic Equipment (EEE).

Türkiye EEE Yönetmeliğine Uygunluk Beyanı

Bu Lenovo ürünü, T.C. Çevre ve Orman Bakanlığı'nın "Elektrik ve Elektronik Eşyalarda Bazı Zararlı Maddelerin Kullanımının Sınırlandırılmasına Dair Yönetmelik (EEE)" direktiflerine uygundur.

EEE Yönetmeliğine Uygundur.

EU WEEE statements

The Waste Electrical and Electronic Equipment (WEEE) mark applies only to countries within the European Union (EU) and Norway. Appliances are labeled in accordance with European Directive 2002/96/EC concerning waste electrical and electronic equipment (WEEE). The Directive determines the framework for the return and recycling of used appliances as applicable throughout the European Union. This label is applied to various products to indicate that the product is not to be thrown away, but rather reclaimed upon end of life per this Directive.

Users of electrical and electronic equipment (EEE) with the WEEE marking per Annex IV of the WEEE Directive must not dispose of end of life EEE as unsorted municipal waste, but use the collection framework available to them for the return, recycle, recovery of WEEE and minimize any potential effects of EEE on the environment and human health due to the presence of hazardous substances. For additional WEEE information go to:

http://www.lenovo.com/lenovo/environment/recycling/

Japan recycling statements

Collecting and Recycling a Disused Lenovo Computer or Monitor

If you are a company employee and need to dispose of a Lenovo computer or monitor that is the property of the company, you must do so in accordance with the Law for Promotion of Effective Utilization of Resources. Computers and monitors are categorized as industrial waste and should be properly disposed of by an industrial waste disposal contractor certified by a local government. In accordance with the Law for Promotion of Effective Utilization of Resources, Lenovo Japan provides, through its PC Collecting and Recycling Services, for the collecting, reuse, and recycling of disused computers and monitors. For details, visit the Lenovo Web site at
www.ibm.com/jp/pc/service/recycle/pcrecycle

http://www.ibm.com/jp/pc/service/recycle/pcrecycle

Pursuant to the Law for Promotion of Effective Utilization of Resources, the collecting and recycling of home-used computers and monitors by the manufacturer was begun on October 1, 2003. This service is provided free of charge for home-used computers sold after October 1, 2003. For details, visit the Lenovo Web site at
www.ibm.com/jp/pc/service/recycle/personal

http://www.ibm.com/jp/pc/service/recycle/personal

Disposing of a Lenovo Computer Components

Some Lenovo computer products sold in Japan may have components that contain heavy metals or other environmental sensitive substances. To properly dispose of disused components, such as a printed circuit board or drive, use the methods described above for collecting and recycling a disused computer or monitor.

Disposing a Disused Battery Pack from Lenovo Notebook Computers

Your Lenovo notebook computer has a lithium ion battery pack or a nickel metal hydride battery pack. If you are a company employee who uses a Lenovo notebook computer and need to dispose of a battery pack, contact the proper person in Lenovo sales, service, or marketing, and follow that person's instructions. You also can refer to the instructions at

www.ibm.com/jp/pc/environment/recycle/battery

http://www.ibm.com/jp/pc/environment/recycle/battery

If you use a Lenovo notebook computer at home and need to dispose of a battery pack, you must comply with local ordinances and regulations. You also can refer to the instructions at
www.ibm.com/jp/pc/environment/recycle/battery
http://www.ibm.com/jp/pc/environment/recycle/battery

Notice for users in the U.S.A.

California Perchlorate Information:

Products containing CR (manganese dioxide) lithium coin cell batteries may contain perchlorate.

Perchlorate Material — special handling may apply.

See http://www.dtsc.ca.gov/hazardouswaste/perchlorate.

Notice on deleting data from your hard disk

As computers spread into every corner of life, they process more and more information. The data on your computer, some of it sensitive, is stored on a storage device called the hard disk. Before you dispose of, sell, or hand over your computer, you need to delete that data.

Handing your computer over to someone else without deleting the loaded software, such as operating systems and application software, may even violate License Agreements. You are advised to check the terms and conditions of those Agreements.

Deleting the data from the hard disk is not easy.

There are methods that seem to delete the data:

- Move the data to the recycle bin, and then choose the Empty recycle bin command.
- Use the Delete command.

- Format your hard disk, using the software for initializing it.
- Using the preinstalled recovery program, bring the hard disk back to factory-ship state.

These operations, however, only change the file allocation of the data; they do not delete the data itself. In other words, the data retrieval processing is disabled under an operating system such as Windows. The data is still there, even though it seems to be lost. Thus, it is sometimes possible to read the data by use of special software for data recovery. There is a risk that people of bad faith may read and misuse the critical data on hard disks for unexpected purposes.

To prevent the leakage of data, it becomes very important that you take responsibility for deleting all the data from the hard disk when you dispose of, sell, or hand over your computer. You can destroy the data physically by smashing the hard disk with a hammer, or magnetically by means of strong magnetic power, thus making the data unreadable. But we recommend that you make use of the software (payware) or service (pay service) specifically developed for the purpose.

Appendix F. Features and Specifications

Model Name: IdeaPad Y460 **Machine Type 20037/0633**

Note: The following specifications may contain technical inaccuracies or typographical errors. Lenovo reserves the right to improve and/or change specifications at any time without notice.

Form Factor	
Size	Appr. 340mm x 235mm x 20~32.8mm (with 6 cells battery pack)
Weight	Appr. 2.2kg/2.1kg
System	
CPU	Intel Dual Core processors
Memory	DDR3 SO-DIMM
LCD	14.0" HD LCD
HDD	2.5" SATA 5400rpm/7200rpm
Keyboard	6-row Lenovo Keyboard
Integrated Camera	1.3M
Battery	57Wh 6 cells Li-Ion
AC Adapter	90W/65W

I/O Ports

USB	USB 2.0 port x 3 eSATA/USB combo port
Communication	RJ-45 port
Audio	Headphone/Mic-In Jack
Video	CRT port/HDMI port
ExpressCard slot	34mm ExpressCard slot x 1
Media card slot	6 in 1 slot x 1 (SD/SD-pro/MMC/MS/MS-pro/XD)
Mini PCI ExpressCard slot (specific models only)	Wi-Fi/WiMax slot x 1 WWAN slot x 1(share with SSD slot)
SIM card slot (specific models only)	Wireless WAN SIM card slot x 1
Kensington slot	Yes

Trademarks

The following tems are trademarks or registered trademarks of Lenovo in the United States, other countries, or both.

Lenovo

IdeaPad

VeriFace

OneKey

Microsoft and Windows are trademarks of Microsoft Corporation in the United States, other countries, or both.

Other company, product or service names may be trademarks or service marks of others.

Index

A

AC adapter
Using 13

B

Battery
Charging 13
Bluetooth
Connecting 30
Interoperability 106
Usage environment 107

C

Camera 2, 21
Card reader 28
Caring your computer 71
Cleaning
Computer cover 82
Computer display 84
Computer keyboard 83
Customer Replaceable Unit (CRU) ... 99
Customer support center 67

F

FCC Statement 110
Frequently Asked Questions 43
Function key combinations 20

H

Hard disk drive
Problems 52
Help
Help and service 66
on the Web 67
Hibernation mode problems 49

K

Keyboard
Cleaning 83
Problems 49
Using 19

L

Lenovo Limited Warranty 85

M

Maintenance 80
Microphone
    Built-in 2

N

Notice
    Electronic emissions 110
Numeric Keypad 19

O

OneKey Rescue System button 40

P

Password
    Problems 48
    Using 27
Power button 2
Problems
    Battery 52
    Computer screen 51
    Display 46
    Hard disk drive 52
    Hibernation mode 49
    Keyboard 49
    Password 48
    Sleep mode 49
    Sound 51
    Startup 52

S

Security 26
Storage media
    Handling 75

T

Touchpad 16
Trademarks 125
Troubleshooting 46

U

Using 31

V

VeriFace 27

W

Warranty information 95
Web
    Help 67
Wireless LAN
    Interoperability 106
    Usage environment 107

lenovo®

If your product is not working correctly,
DO NOT RETURN IT TO THE STORE.

For technical assistance, contact a Lenovo support specialist 24 hours a day by calling toll free **1-877-4 LENOVO (1-877-453-6686).**

Additionally, you can find support information and updates on the Lenovo Web site located at **http://consumersupport.lenovo.com.**

* Only for the users from the United States.

lenovo®

en-US
Rev. RB01