# Lenovo IdeaPad Y450

## User Guide V3.0

lenovo

ideapad

**Note**

Before using this information and the product it supports, be sure to read the following:

- Chapter 6. Safety, use, and care information on page 63.
- Appendix D. Notices on page 116.
- *OneKey Rescue System User Guide* included in the package with this publication.

**Third Edition (May 2009)**

**© Copyright Lenovo 2009.**

LENOVO products, data, computer software, and services have been developed exclusively at private expense and are sold to governmental entities as commercial items as defined by 48 C.F.R. 2.101 with limited and restricted rights to use, reproduction and disclosure. LIMITED AND RESTRICTED RIGHTS NOTICE: If products, data, computer software, or services are delivered pursuant a General Services Administration "GSA" contract, use, reproduction, or disclosure is subject to restrictions set forth in Contract No. GS-35F-05925.

# ENERGY STAR model information

ENERGY STAR® is a joint program of the U.S. Environmental Protection Agency and the U.S. Department of Energy aimed at saving money and protecting the environment through energy efficient products and practices.

Lenovo® is proud to offer our customers products with an ENERGY STAR compliant designation. Lenovo computers of the following machine types, if the ENERGY STAR mark is affixed, have been designed and tested to conform to the ENERGY STAR 4.0 program requirements for computers.

- 20020
- 4189

By using ENERGY STAR compliant products and taking advantage of the power-management features of your computer, you reduce the consumption of electricity. Reduced electrical consumption contributes to potential financial savings, a cleaner environment, and the reduction of greenhouse gas emissions.

For more information about ENERGY STAR, visit http://www.energystar.gov.

Lenovo encourages you to make efficient use of energy an integral part of your day-to-day operations. To help in this endeavor, Lenovo has preset the following power-management features to take effect when your computer has been inactive for a specified duration:

Table 1. ENERGY STAR power-management features, by operating system

| Windows® XP | Windows Vista® |
|---|---|
| • Turn off monitor: After 10 minutes<br>• Turn off hard disks: After 30 minutes<br>• System standby: After 20 minutes<br>• System hibernates: After 2 hours | Power plan: Balanced<br>• Turn off the display: After 10 minutes<br>• Put the computer to sleep: After 25 minutes<br>• Advanced power settings:<br>- Turn off hard disks: After 20 minutes<br>- Hibernate: After 1 hour |

To awaken your computer from sleep or standby mode, press the power button on your keyboard. For more information about these settings, refer to your Windows Help and Support information system.

# Explanation of hard disk capacity

**Dear user,**
**While using your computer, you may discover that the nominal hard disk capacity indicated is somewhat different from the disk capacity displayed by the operating system. For example, a nominal 40GB hard disk will appear as less than 40GB in the operating system. This discrepancy is not an error in hard disk installation nor any other problem, but a normal phenomenon of computers. This phenomenon is primarily due to the following reasons:**

## I. Different standards used by the manufacturer and operating system when calculating hard disk capacity

Hard disk manufacturers use a radix of 1000, i.e. 1GB = 1,000MB, 1MB = 1,000KB, 1KB = 1,000 bytes. However, when identifying hard disk capacity, operating systems use a radix of 1024, i.e. 1GB = 1,024MB, 1MB = 1,024KB, 1KB = 1,024 bytes. The standard adopted by your computer is that of the hard disk manufacturers. Since the standards adopted by the hard disk manufacturer and operating system are different, the hard disk capacity displayed by the operating system will be different from the nominal hard disk capacity.

For example, if the hard disk is nominally X GB, even when it is completely empty, the capacity displayed by the operating system will be:
$X \times 1000 \times 1000 \times 1000 / (1024 \times 1024 \times 1024) \approx X \times 0.931$

If a portion of the hard disk space has been used for some specific purpose, then the capacity indicated by the operating system will be even less than X × 0.931 GB.

## II. A portion of the hard disk space is used for specific purposes

Lenovo computers come with preinstalled OneKey™ Rescue System, so the hard disk has a special portion partitioned before delivery, which is used to store hard disk mirror and OneKey Rescue System program files. The size of the reserved space for this partition varies according to the model, operating system and software of the computer. For the sake of safety, this partition is not evident, which is commonly referred to as a "hidden partition".

In addition, after the hard disk is partitioned or formatted, the system will assign a certain amount of hard disk space for the system files.

**For the above reasons, the available hard disk space indicated by the operating system is always less than the computer's nominal hard disk capacity.**

# Contents

**Chapter 1. Getting to know your computer ..... 1**
Top view ..... 1
Left-side view ..... 3
Right-side view ..... 5
Front view ..... 7
Bottom view ..... 9

**Chapter 2. Using your computer ..... 11**
Using the touchpad ..... 11
Using the keyboard ..... 14
Special keys and buttons ..... 17
Using the optical drive ..... 19
Using memory cards ..... 20
Using Lenovo remote (specific models only) ..... 22
Using the integrated camera ..... 22
Using the Internet ..... 23
Securing your computer ..... 29
Installing device drivers ..... 31
Using battery and AC adapter ..... 31

**Chapter 3. Using external devices ..... 35**
Connecting a Universal Serial Bus (USB) device ..... 35
Connecting an eSATA device ..... 37
Connecting an IEEE 1394 device ..... 38
Connecting an ExpressCard/34 device ..... 39
Connecting an external display ..... 41

Connecting a headphone and audio device ..... 43
Connecting an external microphone ..... 45
Connecting *Bluetooth* enabled devices (specific models only) ..... 46

**Chapter 4. Troubleshooting ..... 47**
Frequently asked questions ..... 47
Troubleshooting ..... 49

**Chapter 5. Getting help and service ..... 58**
Getting help and service ..... 58
Getting help on the Web ..... 59
Calling the Customer Support Center ..... 59
Getting help around the world ..... 62

**Chapter 6. Safety, use, and care information ..... 63**
Important safety information ..... 63
Caring your computer ..... 82
Accessibility and comfort ..... 90
Maintenance ..... 93

**Appendix A. Lenovo limited warranty ..... 97**
Warranty Information ..... 107
Lenovo warranty service telephone numbers ..... 111

**Appendix B. Customer Replaceable Units (CRUs) ..... 113**

**Appendix C. Specifications ..... 114**
Specifications ..... 114

**Appendix D. Notices ..... 116**
Notices ..... 116
Wireless related information ..... 119
Electronic emissions notices ..... 122
WEEE and recycling statements ..... 128
Turkish statement of compliance ..... 129
EU WEEE statements ..... 129
Japan recycling statements ..... 130
Notice for users in the U.S.A. ..... 132
Notice on deleting data from your hard disk ..... 132
Trademarks ..... 134

**Index ..... 135**

# Chapter 1. Getting to know your computer

## Top view

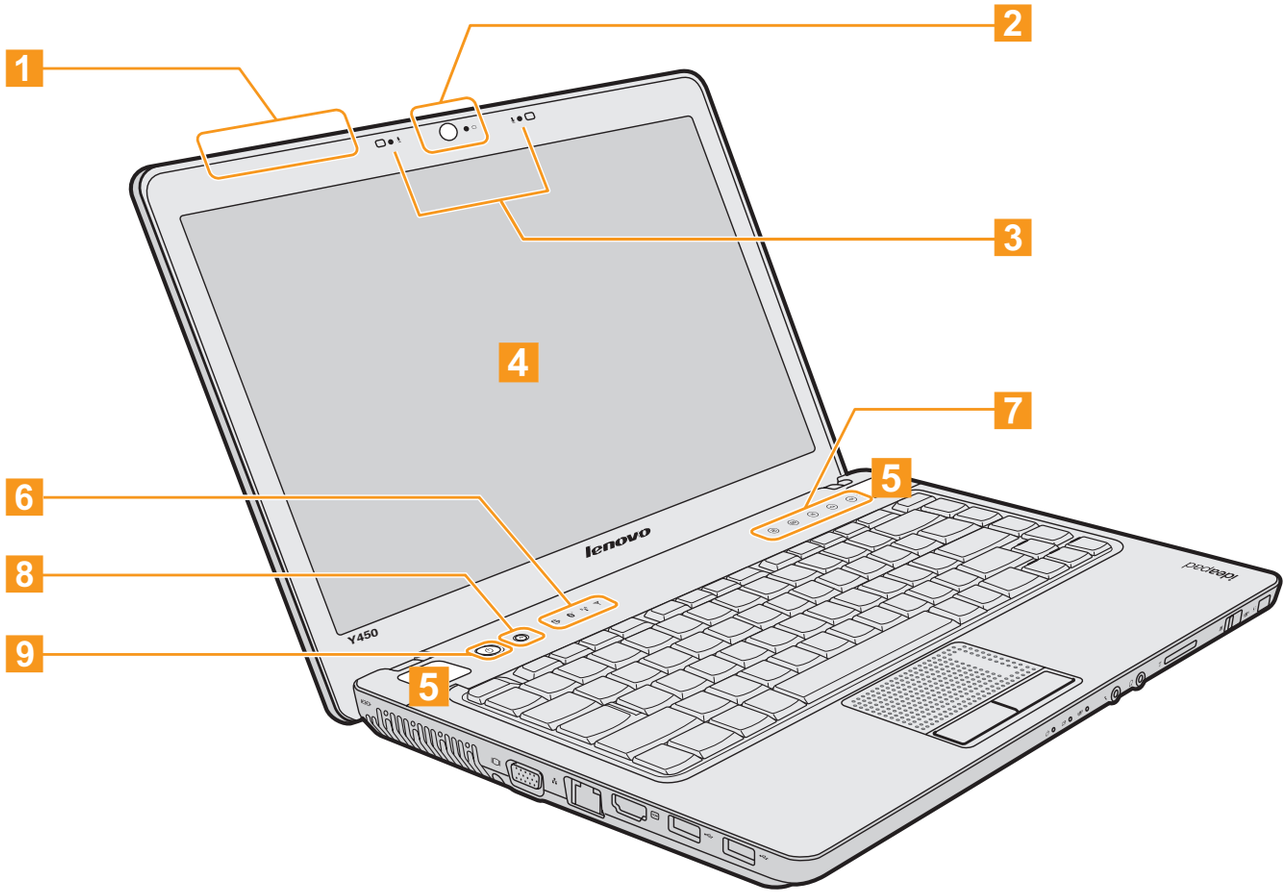


* The illustrations in this manual may differ from the actual product. Please refer to the actual product.

1 **Wireless LAN antennas**
An isotropic antenna system is built into the display.

2 **Integrated camera** ..... 22

3 **Array microphone (built-in)**
The built-in microphone can be used for video conferencing, voice narration, or simple audio recordings.

4 **Computer display**
The color display with LED-backlit technology provides clear and brilliant text and graphics.

5 **Speakers**

6 **System status indicators**

7 **Touch inductive panel** ..... 17

8 **OneKey Rescue System button** ..... 19

9 **Power button**

## Left-side view

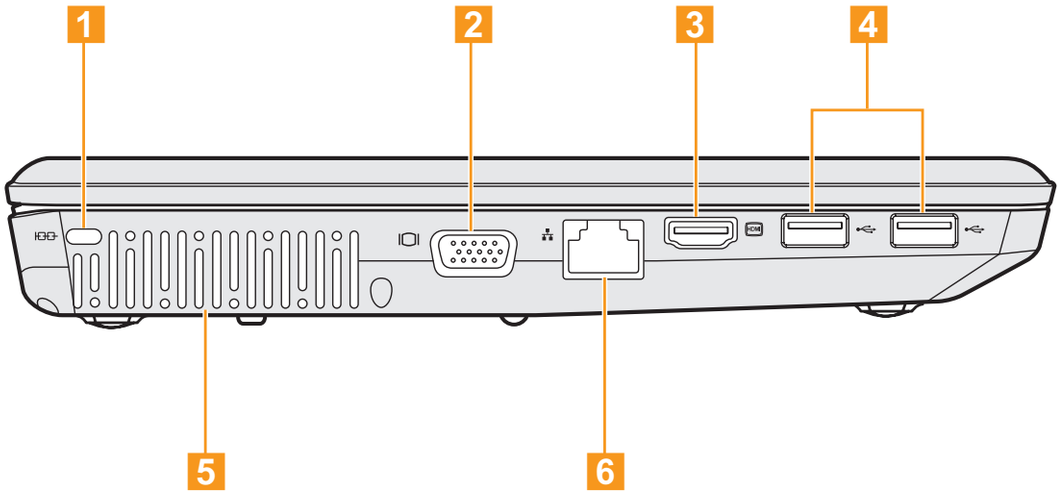

**1 Security keyhole**

Your computer comes with a security keyhole. You can purchase a security cable and lock to fit this keyhole.

**❖ Note:**

Before purchasing any security product, verify that it is compatible with this type of security keyhole.

**2 VGA port** ..... 41

**3 HDMI™ port** ..... 42

**4 USB port** ..... 35

**5 Fan louvers**

**➲ Important:**

Make sure that any of the fan louvers are not blocked or else overheating of the computer may occur.

**6 RJ-45 port** ..... 23

## Right-side view

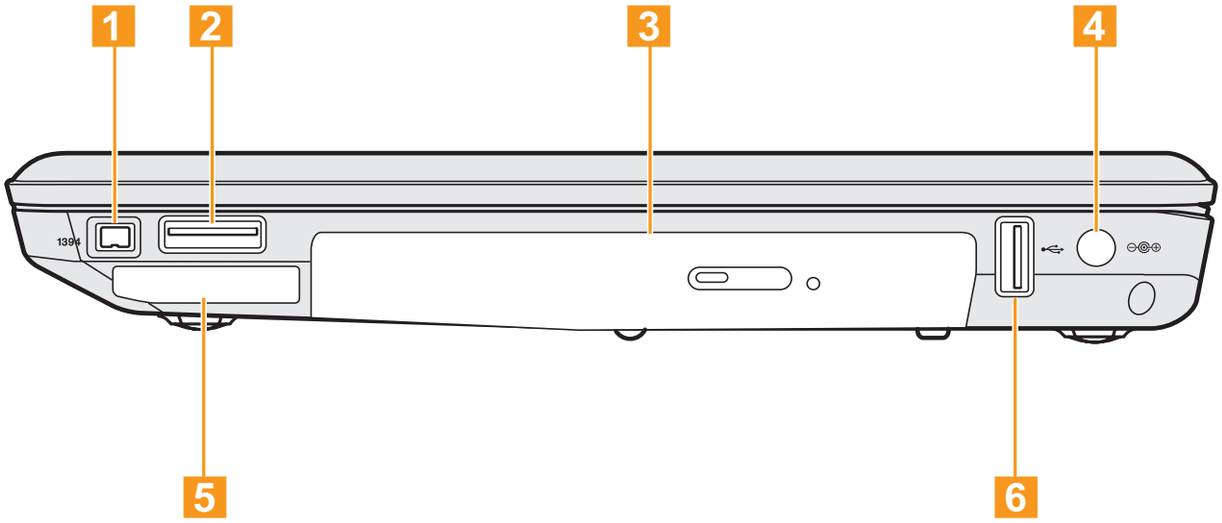

1 **IEEE 1394 connector** ..... 38

2 **eSATA/USB combo port** ..... 37

3 **Optical drive** ..... 19

4 **AC power adapter jack**

Connect the power adapter here to supply power to the computer and charge the battery pack.

❖ **Note:**

To prevent damage to the computer and battery pack, use the supplied AC adapter only.

5 **ExpressCard®/34 slot** ..... 39

6 **USB port** ..... 35

## Front view

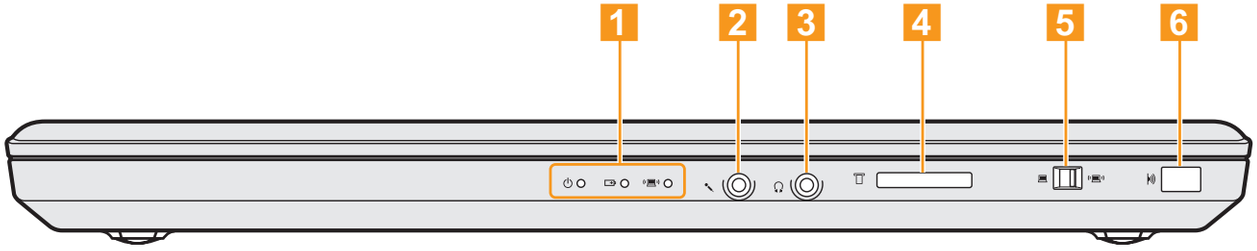

1 **System status indicators**

2 **Microphone jack (external)** ..... 45

3 **Headphone jack (S/PDIF) (external)** ..... 43

4 **Memory card slot** ..... 20

5 **Integrated wireless device switch**
Use this switch to disable the wireless radio of all the integrated wireless devices on your computer.

6 **CIR port** ..... 22
CIR port, used for Lenovo remote controller.

## Bottom view

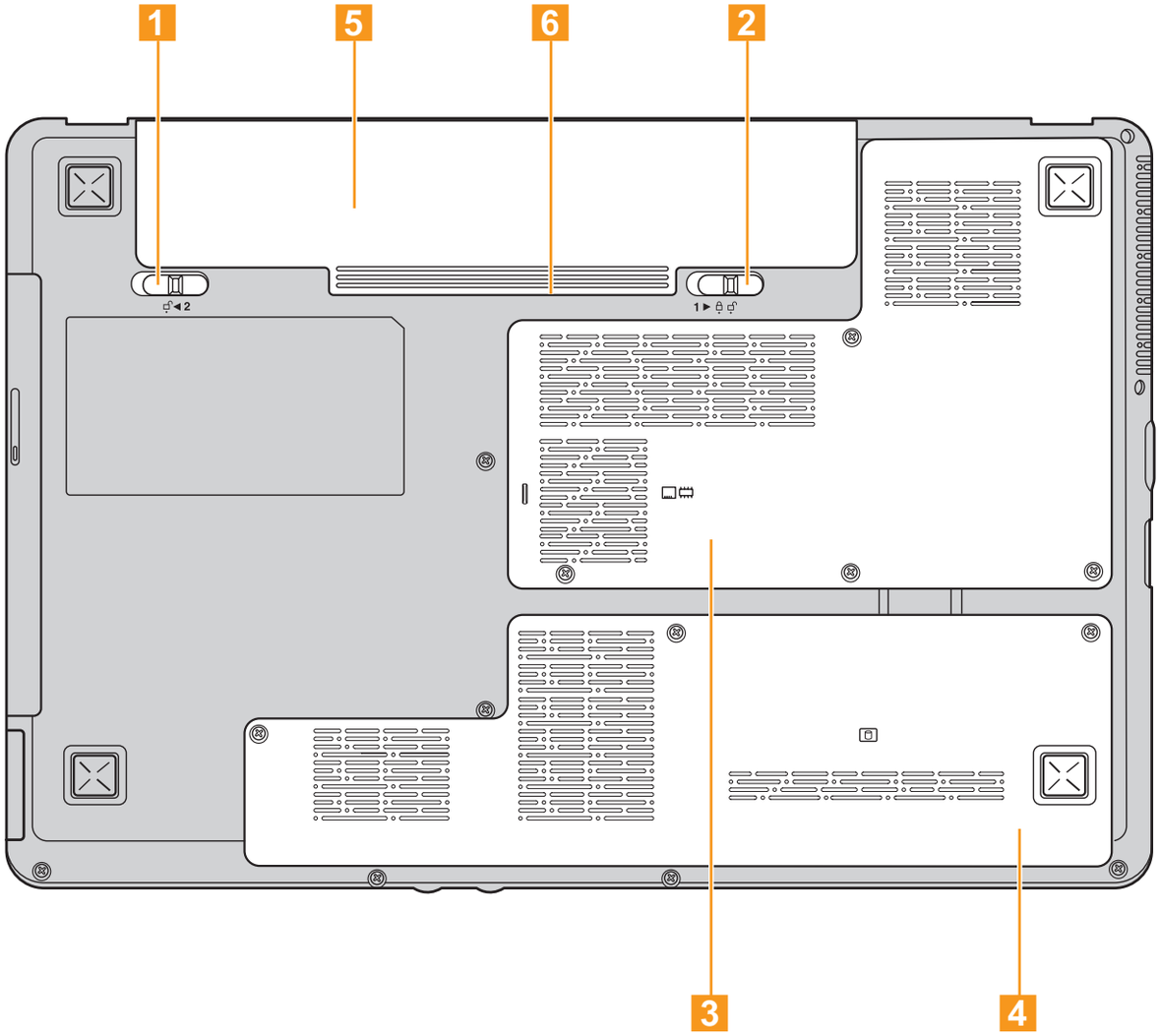

**1 Battery latch - spring loaded**

The spring-loaded battery latch keeps the battery pack secured in place. When you insert a battery pack, this latch automatically secures the battery in place. To remove the battery, hold this latch in the unlocked position.

**2 Battery latch - manual**

The manual battery latch is used to keep the battery pack secured. Move the manual battery latch to the unlocked position to insert or remove the battery pack. Move the manual latch to the locked position after inserting the battery pack.

**3 Central Processing Unit (CPU)/ Memory (RAM) compartment**

**4 Hard Disk compartment**

**➲ Important:**

Do not disassemble any component by yourself! If you do need to, ask a Lenovo authorized service center or dealer to disassemble it.

**5 Battery pack** ..... 31

**6 SIM card slot (inside the battery bay, specific models only)**

## Using the touchpad

The touchpad consists of a pad 1 and two click buttons at the bottom of the keyboard. To move the cursor 2 on the screen, slide your fingertip over the pad in the direction in which you want the cursor to move. The functions of the left 3 and right 4 click buttons correspond to those of the left and right mouse buttons on a conventional mouse.

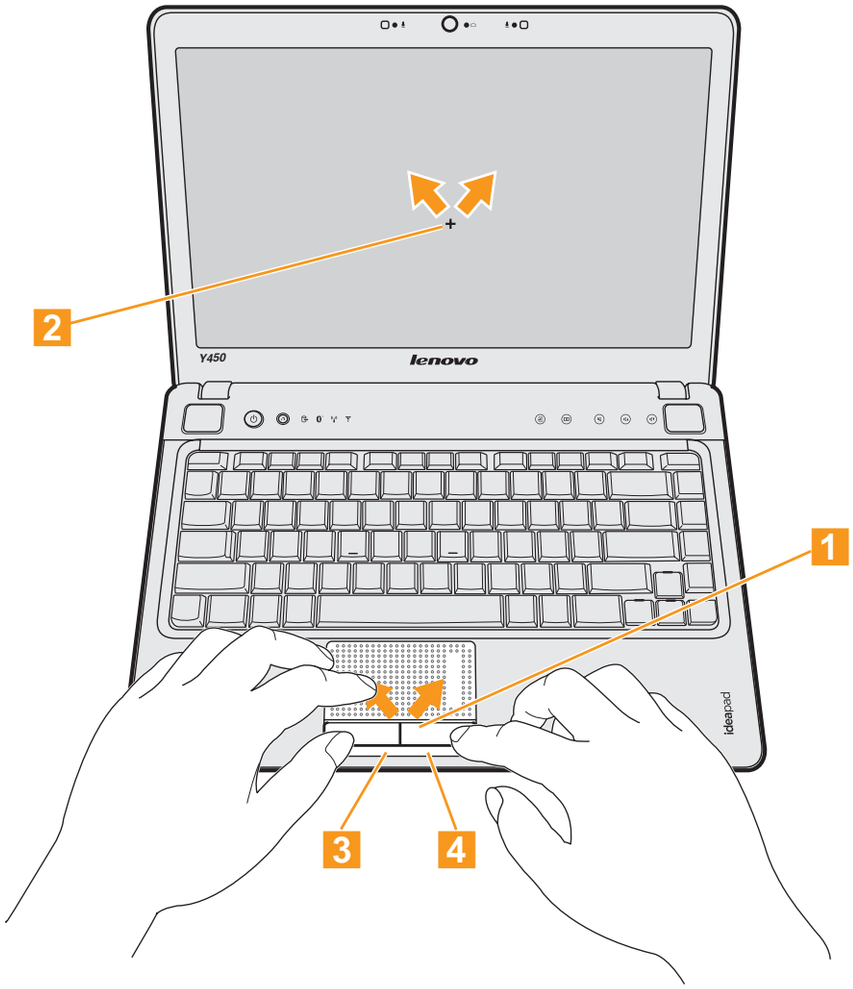

❖ **Note:**

You can also attach and use a USB mouse through the USB connector. For details, see "Connecting a Universal Serial Bus (USB) device" on page 35.

## Gestures

Your computer touchpad  is equipped with gestures technology which provides an innovative alternative to conventional scrolling and buttons, enabling users to get to the functionality they need more quickly.

The touchpad can recognize some gestures and make actions like zoom in/out, or scroll up/down easily.

### ChiralMotion™

Slide your finger to the right side of the touchpad until you see the scroll mark, then draw on the touchpad in a twisting motion. Draw clockwise or counterclockwise to scroll the page down or up.

### Pinch

Use two fingers and make a pinch gesture on the touch pad to zoom out; reverse the gesture to zoom in.

You will find pinch gesture very useful when you are viewing pictures or portable document format (PDF) files.

## Palm Check

To prevent mis-touch, the touch pad ignores big active area motions, like any movement at the touchpad with your palm, you may set the area size by clicking Synaptics Pointing Device icon in the system tray in the lower right corner of the desktop.

You can also change other gesture settings (e.g., enable/disable ChiralMotion) by clicking the Synaptics Pointing Device icon.

# Using the keyboard

Your computer has a numeric keypad and function keys incorporated in the standard keyboard.

## Numeric keypad

The keyboard has keys that, when enabled, work as a 10-key numeric keypad.
To enable or disable the numeric keypad, press **Fn + F8**.

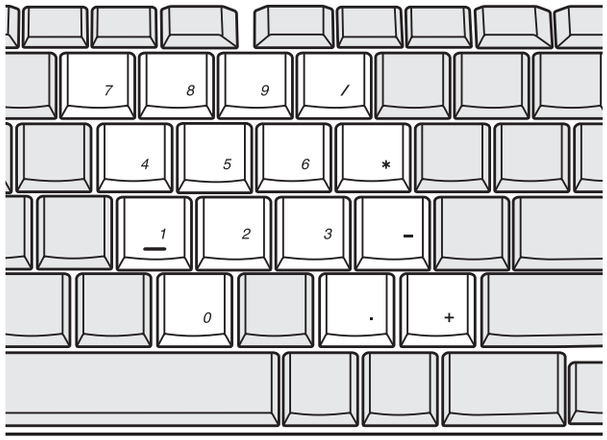


* The illustrations in this manual may differ from the actual product. Please refer to the actual product.

## Function key combinations

Through the use of the function keys, you can change operational features instantly. To use this function, press and hold the **Fn** key 1 ; then press one of the function keys 2 .

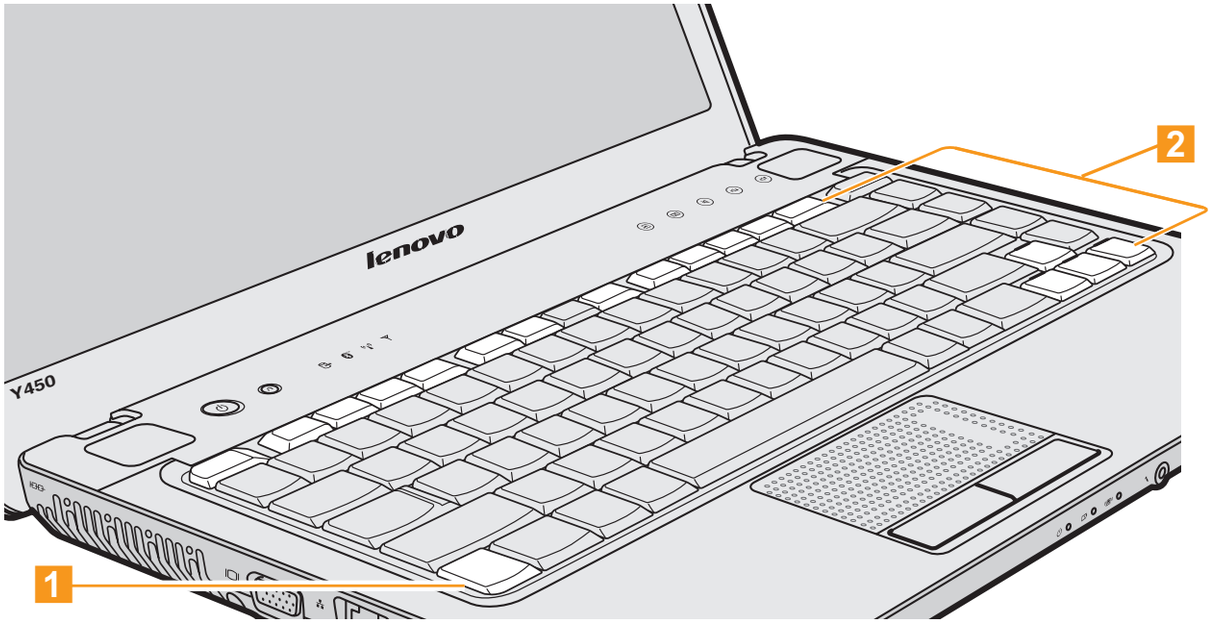

The following describes the features of each function key.

**Fn + Esc:** Turn on/off the integrated camera.

**Fn + F1:** Put your computer in sleep mode.

**Fn + F2:** Turn on/off the LCD screen.

**Fn + F3:** Shift to other connected display devices.

**Fn + F4:** Open the interface for display resolution settings.

**Fn + F5:** Open the interface for integrated wireless devices settings (enable/disable).

**Fn + F6:** Enable/disable the touchpad.

**Fn + F8:** NumLk function.

**Fn + F9:** Pause function.

**Fn + F10:** Break function.

**Fn + F11:** ScrLk function.

**Fn + F12:** Insert function.

**Fn + PrtSc/SysRq:** System request.

**Fn + ↑ / ↓:** Increase/decrease display brightness.

**Fn + → / ←:** Increase/decrease computer volume.

## Special keys and buttons

Your computer has several special keys and buttons.

### Touch inductive panel with multi-media buttons

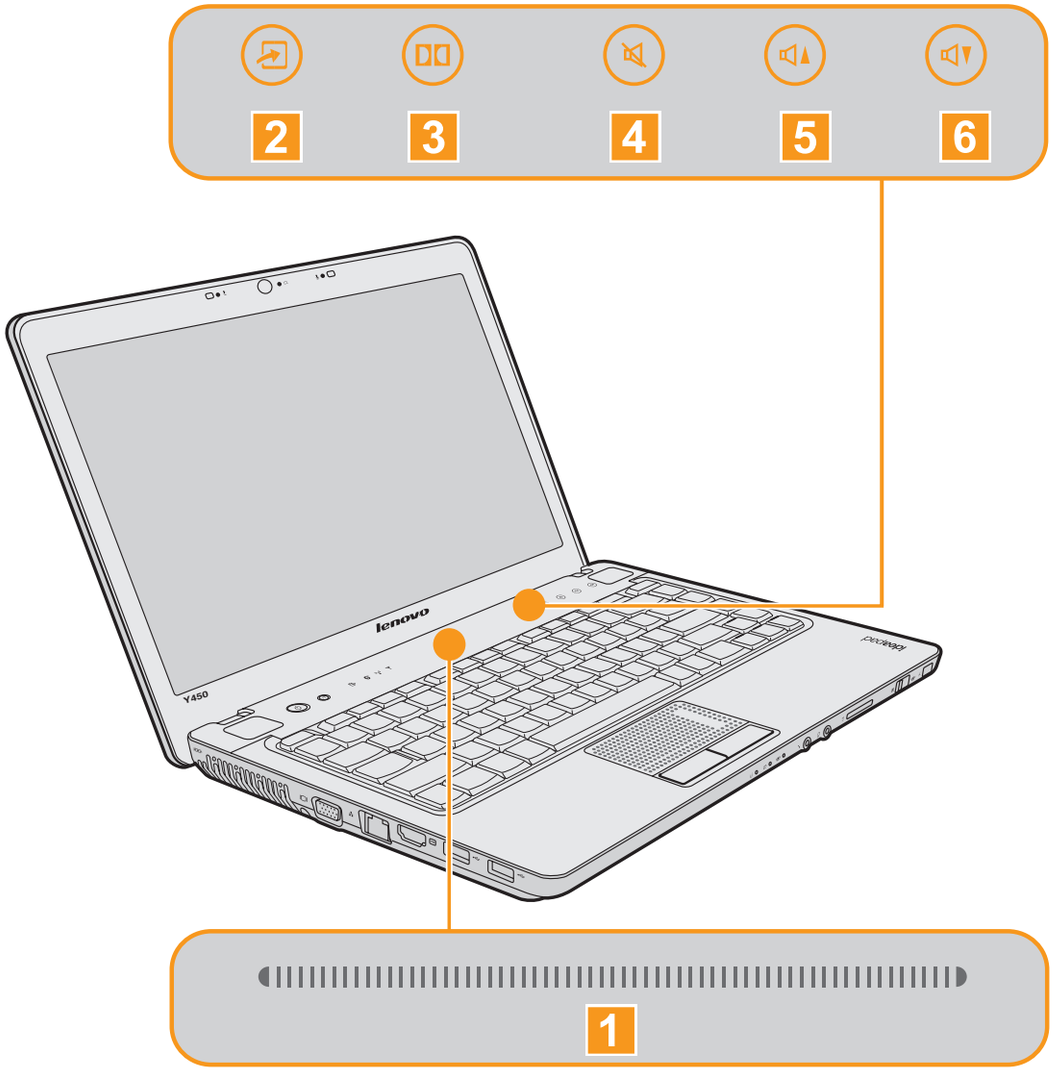

1. **Lenovo SlideNav bar:**
   Quick launch customized applications by the slide and release at the Lenovo SlideNav bar when Lenovo SlideNav is installed.
2. **OneKey Theater:**
   OneKey Theater will optimize the color and volume setting of your computer, bringing you greater visual and aural impact when enjoying movies.
3. **Open Dolby function setup screen.**
4. **Mute/unmute the sound.**
5. **Increase computer volume.**
6. **Decrease computer volume.**

### OneKey Rescue System button

Press the OneKey Rescue System button to enter the main interface of OneKey Rescue System while the power is off.

**Attention:**

When you press OneKey Rescue System button to turn on the computer, please ensure that your computer is not connected with other peripherals (such as a USB storage device, etc.), otherwise the system may not operate properly.
For details, see *OneKey Rescue System User Guide*.

**Note:**

When your computer is running Windows Vista, and if you have the OneKey Recovery application installed, you can start the application by pressing the OneKey Rescue System button.

## Using the optical drive

Your computer comes with an optical drive, such as a CD/DVD/Blu-ray drive.

## Using memory cards

Your computer comes with a memory card slot used to insert a memory card, such as an SD/SDHC Card, a MultiMediaCard, an xD-Picture Card or a Memory Stick/Memory Stick Pro.

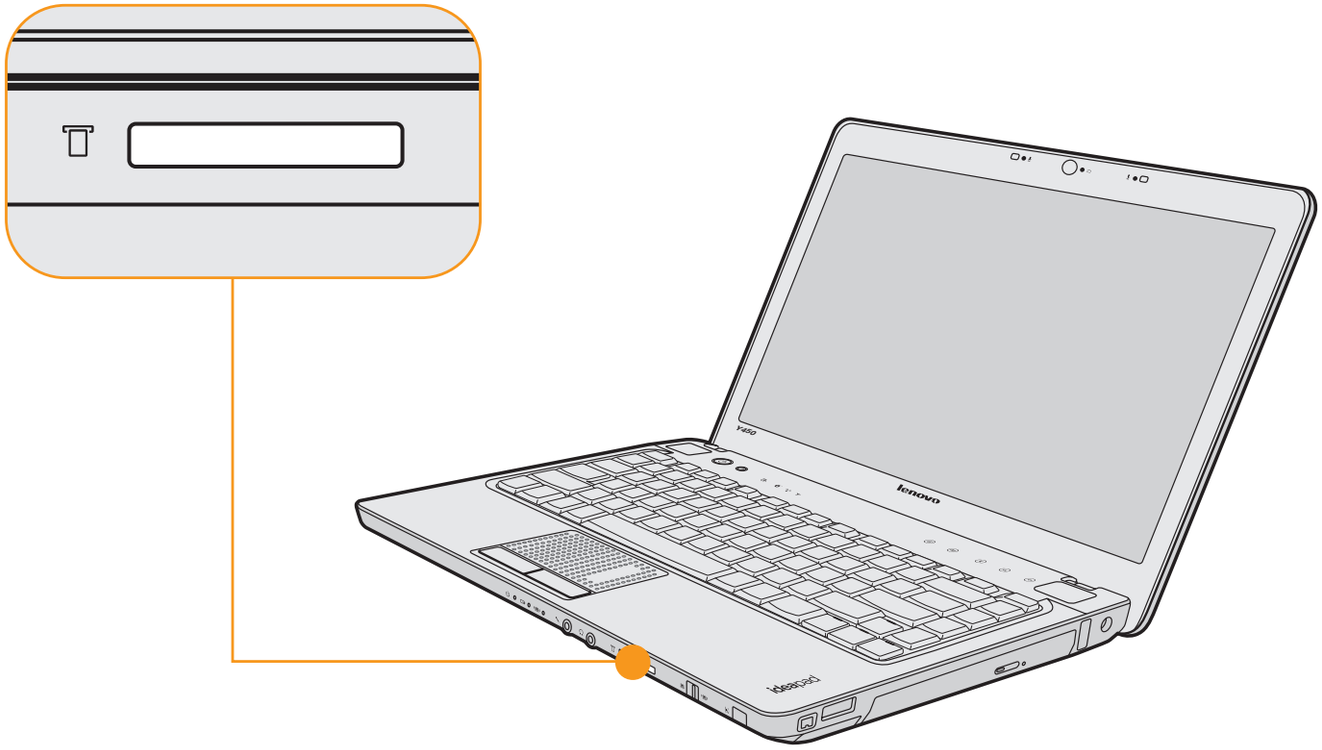


❖ **Note:**

Only use the memory cards listed above; for more information about the usage, read the instructions shipped with the memory card.

## Inserting a memory card

Gently slide the memory card with the arrow facing upward and pointing toward the memory card slot. Slide until it clicks into place.

## Removing a memory card

1. Push the memory card until you hear a click.
2. Gently pull the memory card out of the memory card slot.

## Using Lenovo remote (specific models only)

You can use the remote control with Windows Media Center for convenient media enjoyment.
For details of the remote control operation, see the instructions supplied with it.

## Using the integrated camera

With the built-in camera, you can take photos or movies and use with various applications, such as EasyCapture, Windows Live Messenger or Yahoo! Messenger, and so on.

❖ **Note:**
If you use Windows Vista, you need to install a separate third party dedicated application, because Windows Vista does not include a program for taking pictures or movies with the integrated camera.

# Using the Internet

## Using RJ-45 port

The RJ-45 port supports a standard RJ-45 connector, and allows you to connect the computer to an Ethernet connection and local area network (LAN).

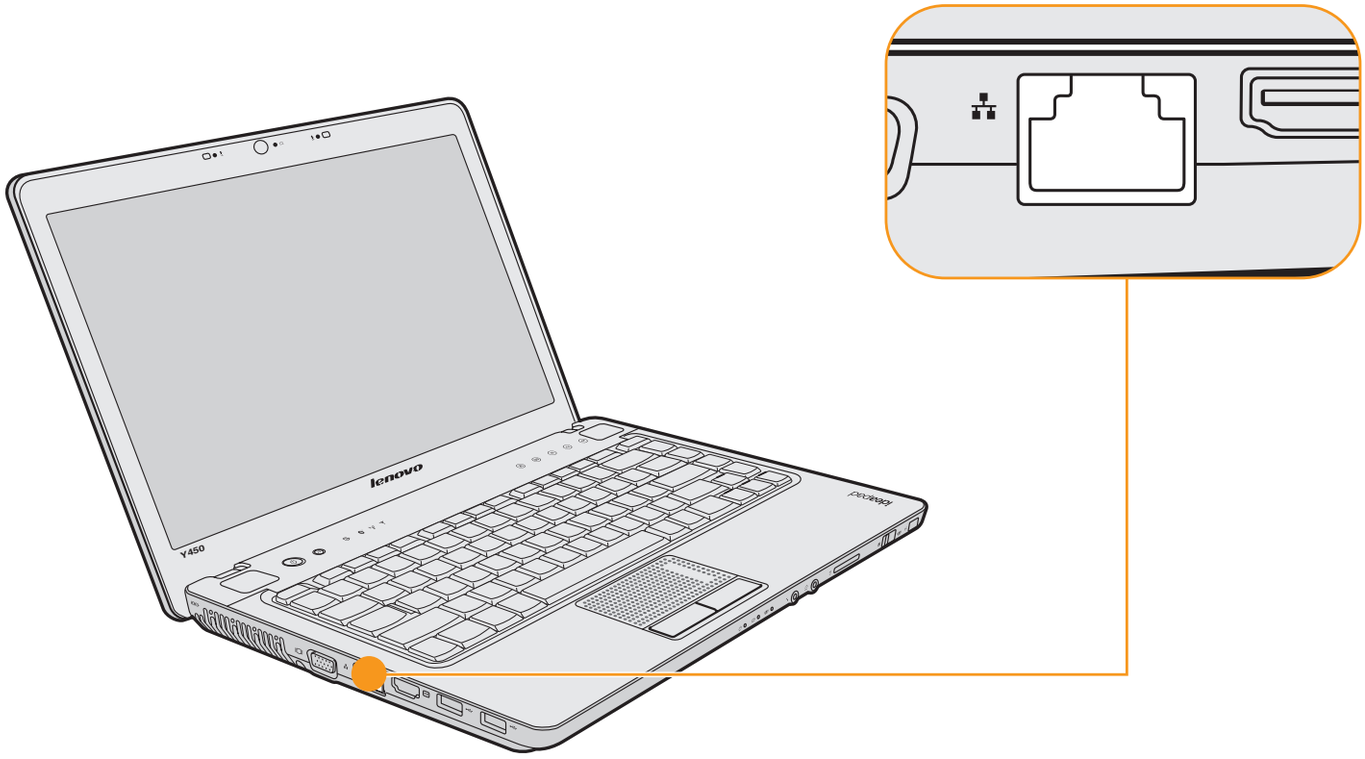

**Attention:**

As the voltage of a telephone connection is higher than that of a network, do not attempt to connect a telephone cable to the RJ-45 port or else a short circuit of the computer might occur.

## Using wireless LAN

Depending on your model, a wireless LAN PCI Express Mini Card may be pre-installed at the factory, which enables your computer hardware ready for accessing wireless LANs.

**Note:**

An isotropic antenna system is built into the display for optimal reception, enabling wireless communication wherever you are.

To enable wireless communications, do the following;

1. Slide the integrated wireless device switch to the right.
2. Press **Fn + F5** to make configuration.

## Using Mobile Broadband (specific models only)

❖ **Note:**

Before using the Mobile Broadband, be sure to see "Safety information related to Mobile Broadband" in Chapter 6 first.

### What is Mobile Broadband

A Mobile Broadband network, also known as a Wireless Wide Area Network (WWAN), provides Internet access to laptop computers, cell phones and other devices over a large geographic area. Cellular networks are used for data transmission, and access is usually provided by a mobile network operator.

The biggest advantage of Mobile Broadband is that it is accessible from anywhere you can get a signal from your carrier. Laptop computers with Mobile Broadband access can stay online on the move, and will not be tied down by a wired Internet connection.

Various standards are in use by mobile operators to provide Mobile Broadband service. Depending on the model, your Mobile Broadband module may support one or more of the following standards:

- GSM (Global System for Mobile Communications)
- TD-SCDMA (Time Division-Synchronous Code Division Multiple Access)
- SCDMA (Synchronous Code Division Multiple Access)
- EV-DO (Evolution Data Optimized)
- HSPA (High Speed Packet Access)

❖ **Note:**

A mobile network operator, also known as mobile carrier, is a telephony company that provides mobile telecommunication service to its subscribers.

Mobile Broadband is a subscription service. Refer to your local mobile network operator for availability, cost and other information.

## Getting started with Mobile Broadband

Before getting started with Mobile Broadband, you first need to choose a mobile network operator and make sure you are in the coverage area of the network. After that, you also need:

- To activate Mobile Broadband service through your local mobile network operator. You will get a Subscriber Identity Module (SIM) card after activation. For instructions on inserting the SIM card, refer to the "Inserting the SIM card" on page 27.

❖ **Note:**

A SIM card is a type of smart card used by mobile network operators to identify their service subscribers on the mobile network. You will get the SIM card from your mobile network operator after you have activated the Mobile Broadband service.

- A connection management utility to connect/disconnect to your Mobile Broadband network.

❖ **Note:**

In general, your mobile service provider will provide this utility.

## Inserting the SIM card

To insert the SIM card:

1. Turn off the computer; then disconnect the AC adapter and all cables from the computer.
2. Close the computer display and turn it over.
3. Remove the battery.
4. Insert the SIM card to the card slot until it clicks into place as shown in the drawing.

   ❖ **Note:**

   Be careful when inserting the SIM card, only insert in the direction shown below. Inserting the SIM card in the wrong direction may damage the SIM card slot.

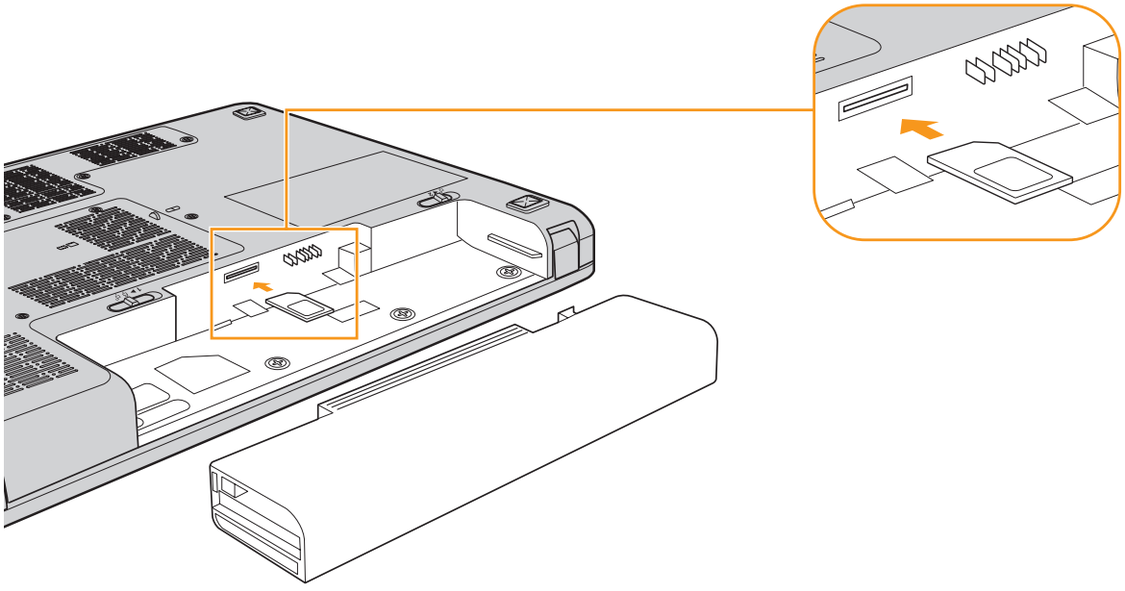

5. Put the battery back in place, turn the computer over again, and reconnect the cables.

**Important:**

Never insert or remove the SIM card while the computer is on. Doing so may cause permanent damage to the SIM card as well as the SIM card reader.
Be sure to lock the card holder when the SIM card is inserted.

## Removing the SIM card

To remove the SIM card:

1. Turn off the computer; then disconnect the AC adapter and all cables from the computer.
2. Close the computer display and turn it over.
3. Remove the battery.
4. Push the SIM card in until you hear a click, and then pull the SIM card out.

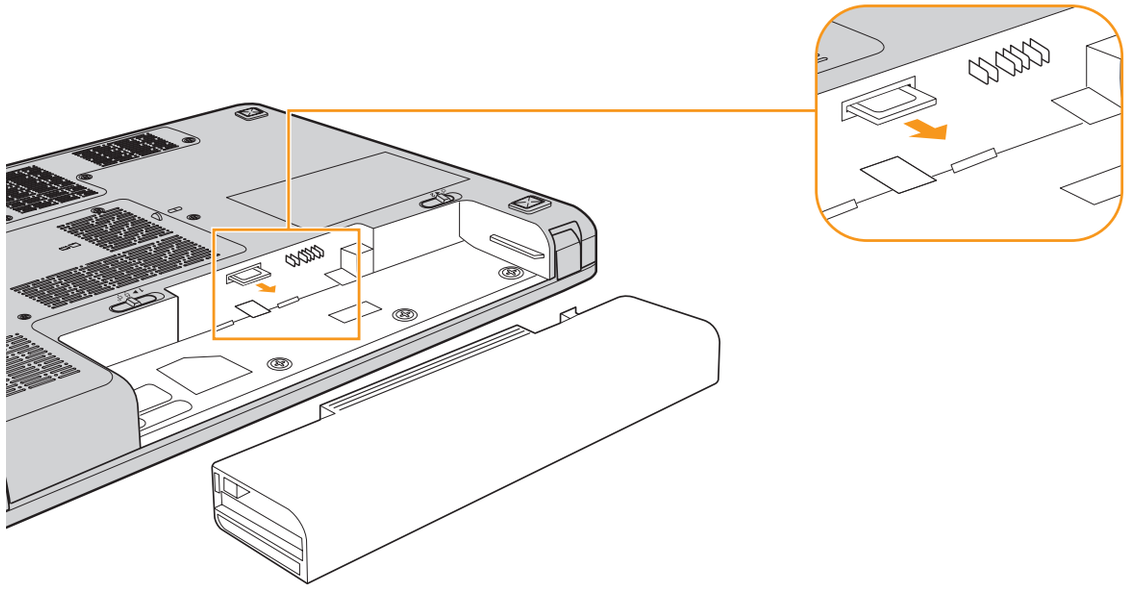

5. Put the battery back in place, turn the computer over again, and reconnect the cables.

**Important:**

Be sure to lock the card holder when the SIM card is removed.

## Securing your computer

This section provides information about how to help protect your computer from theft and unauthorized use.

### Attaching a security lock (optional)

You can attach a security lock to your computer to help prevent it from being removed without your permission.

Attach a security lock to the keyhole of the computer; then secure the chain on the lock to a stationary object. Refer to the instructions shipped with the security lock.

Refer to the “Left-side view” on page 3 for the location of the security keyhole.

**Note:**

You are responsible for evaluating, selecting, and implementing the locking devices and security features. Lenovo makes no comments, judgements, or warranties about the function, quality, or performance of locking devices and security features.

## Using VeriFace™

VeriFace is a face recognition software which takes a digital snapshot, extracts key features of your face, and creates a digital map that becomes the system's "password".

**Note:**
The face registration and verification works best in the environment with steady and even light.

For more instructions on VeriFace, see the help file on your software.

## Using passwords

Using passwords helps prevent your computer from being used by others. Once you set a password and enable it, a prompt appears on the screen each time you power on the computer. Enter your password at the prompt. The computer cannot be used unless you enter the correct password.

Make sure that only authorized individuals access your computer. Establishing different kinds of passwords requires that other possible users know the proper passwords in order to access your computer or your data. This password can be from two to eight alphanumeric characters in any combination.

For details about how to set the password, see the **Help** to the right of the screen in BIOS Setup Utility.

## Installing device drivers

A compatible device driver is a requirement to ensure correct operation and performance of each component in your computer. If your computer is pre-installed with an operating system, Lenovo provides all drivers that you need in your hard disk.

## Using battery and AC adapter

When you cannot use the AC adapter to power your computer, you may depend on battery power to keep your computer running.

❖ **Note:**
The operating system may run slower when using the battery mode.

### Checking battery status

You can determine the percentage of battery power remaining by using Windows Power options.

As each computer user has different habits and needs, it is difficult to predict how long a battery charge will last. There are two main factors:

- The amount of energy stored in the battery when you begin to work.
- The way you use your computer: for example, how often you access the hard disk drive and how bright you make the computer display.

## Using the AC adapter

The power to run your computer can come either from the battery pack or from AC power through the AC adapter.

**Attention:**

Using an improper power cord could cause severe damage to your computer.

To use the AC adapter, do the following. Be sure to take these steps in the order in which they are given here.

1. Connect the power cord to the transformer pack.
2. Plug the power cord into an electrical outlet.
3. Connect the AC adapter to the AC power adapter jack of the computer.

You can check the status of your battery at any time by looking at the battery meter at the bottom of your display.

**Note:**

- When you do not use the AC adapter, disconnect it from the electrical outlet.
- Do not wrap the power cord tightly around the AC power transformer pack when it is connected to the transformer.
- You can charge the battery when the AC adapter is connected to the computer and the battery is installed. You need to charge it in any of the following conditions:
  - When you purchase a new battery
  - If the battery status indicator starts blinking
  - If the battery has not been used for a long time

When you charge the battery, make sure that its temperature is between 0° and 60°C (32° - 140°F).

## Charging the battery

When you check the battery status and find that the battery is low, you need to charge the battery or replace it with a charged battery.

If an AC outlet is convenient, first, connect the power cord to the transformer pack; second, plug the power cord into an electrical outlet; and then connect the AC adapter to the power jack of the computer.

The charging time is affected by the physical environment.

**Note:**

To increase the life of the battery, the computer does not start recharging the battery immediately when it drops from fully-charged.

## Handling the battery

**Danger:**

Do not attempt to disassemble or modify the battery pack.

Attempting to do so can cause an explosion, or liquid leakage from the battery pack.

A battery pack other than the one specified by Lenovo, or a disassembled or modified battery pack is not covered by the warranty.

**Danger:**

If the rechargeable battery pack is incorrectly replaced, there is danger of an explosion. The battery pack contains a small amount of harmful substances. To avoid possible injury:

- Replace only with a battery of the type recommended by Lenovo.
- Keep the battery pack away from fire.
- Do not expose the battery pack to water or rain.
- Do not attempt to disassemble the battery pack.
- Do not short-circuit the battery pack.
- Keep the battery pack away from children.

**Danger:**

Do not put the battery pack in trash that is disposed of in landfills. When disposing of the battery, comply with local ordinances or regulations and your company's safety standards.

# Chapter 3. Using external devices

Your computer has many built-in features and connection capabilities.

**Attention:**

Do not connect or disconnect any external device cables other than USB, eSATA and 1394 cables while the computer power is on; otherwise, you might damage your computer. To avoid possible damage to attached devices, wait at least five seconds after the computer is shut down to disconnect external devices.

## Connecting a Universal Serial Bus (USB) device

Your computer comes with USB ports compatible with USB devices such as a keyboard, mouse, camera, external hard disk drive, printer and scanner.

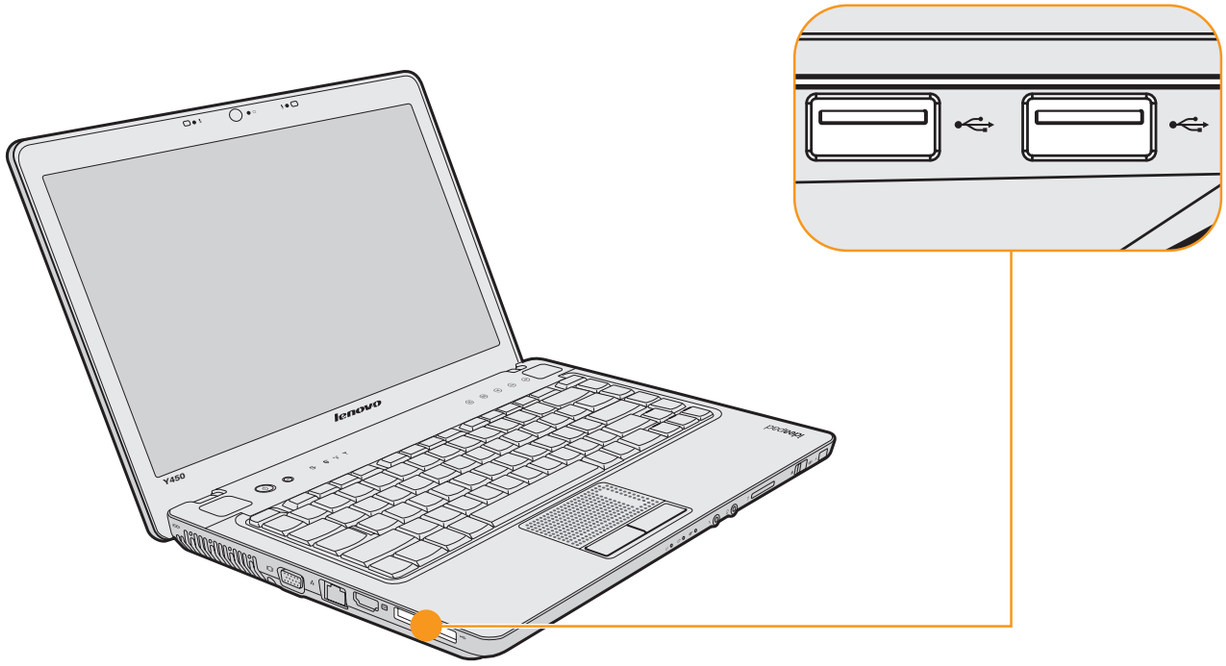

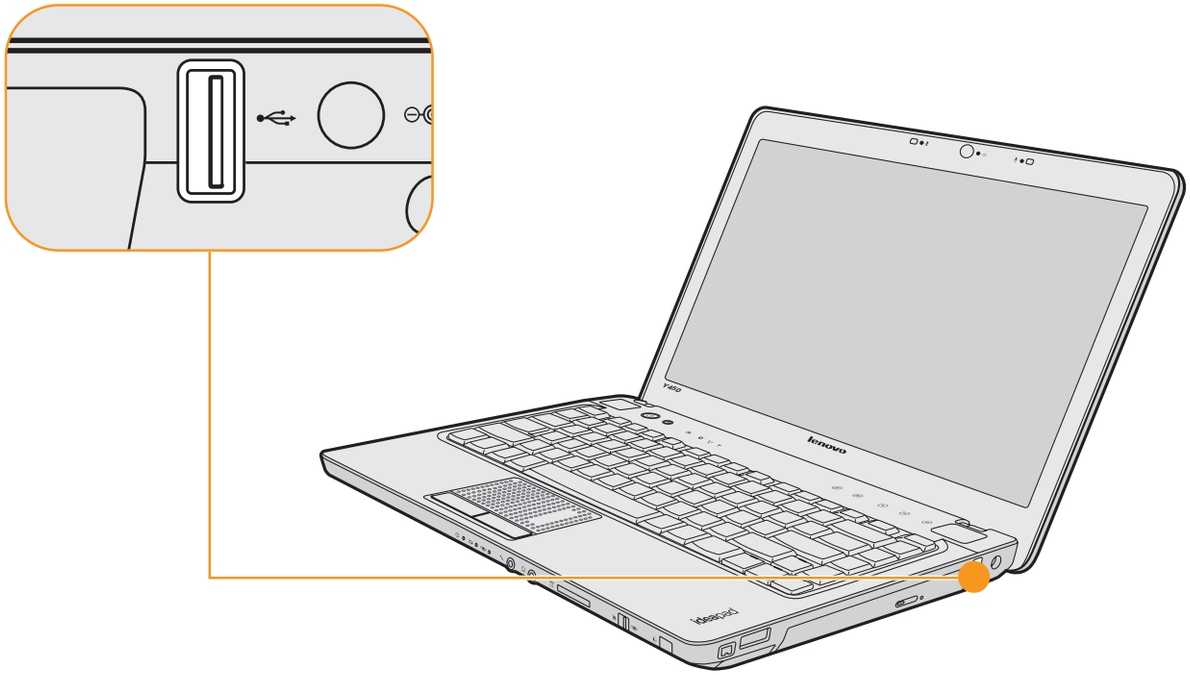

**Attention:**

When using high power consumption USB devices, use external device power adapter. Otherwise, it will cause the device unable to be recognized and used, or system shut down.

## Connecting an eSATA device

Your computer comes with an eSATA/USB combo port used for connecting devices that are compatible with the eSATA/USB interface, such as external hard disk drives.

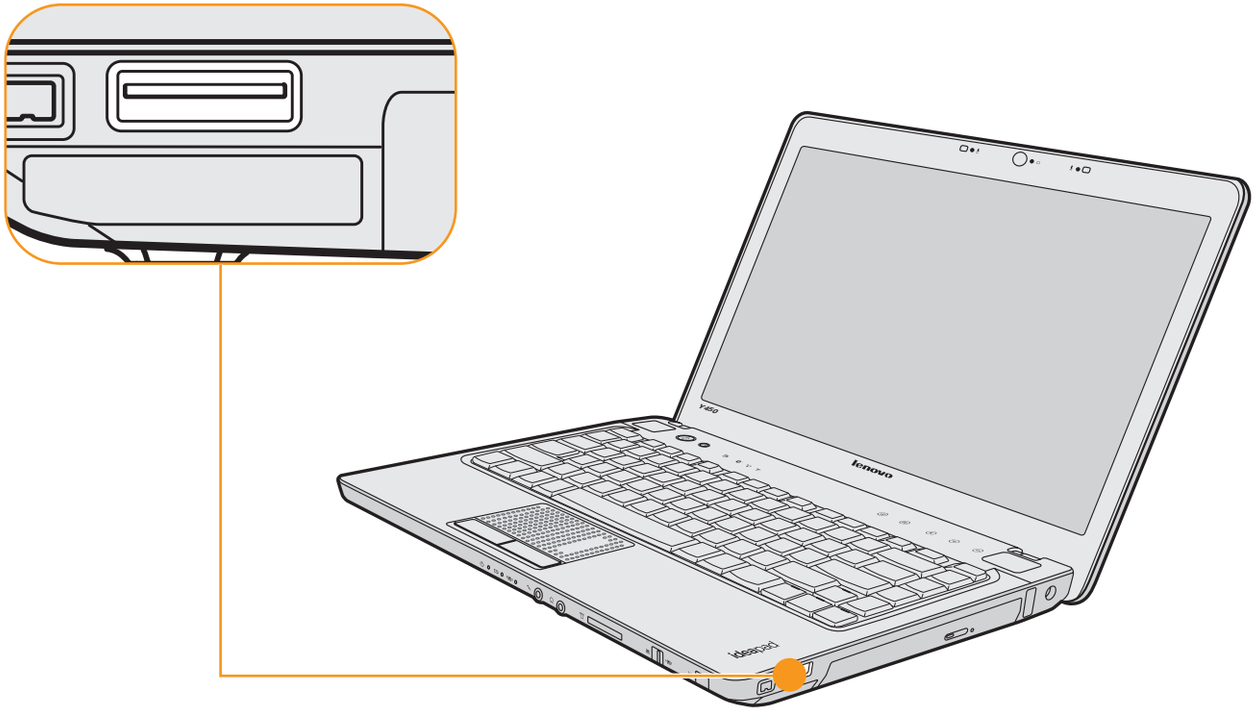


❖ **Note:**

Both the eSATA and USB connectors can fit into this port.

## Connecting an IEEE 1394 device

Your computer comes with an IEEE 1394 connector used for connecting devices that are compatible with the IEEE 1394 interface, such as digital video cameras and external hard disk drives.

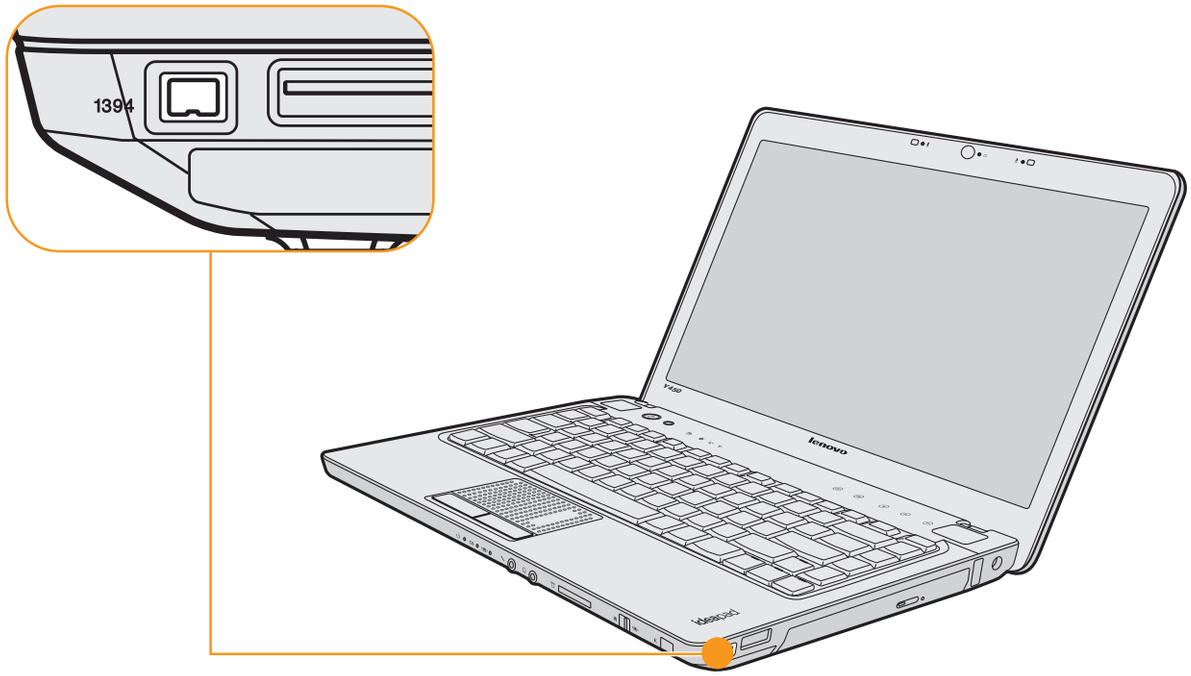

## Connecting an ExpressCard/34 device

Your computer comes with an ExpressCard slot used for connecting ExpressCard devices that are compatible with the ExpressCard interface.

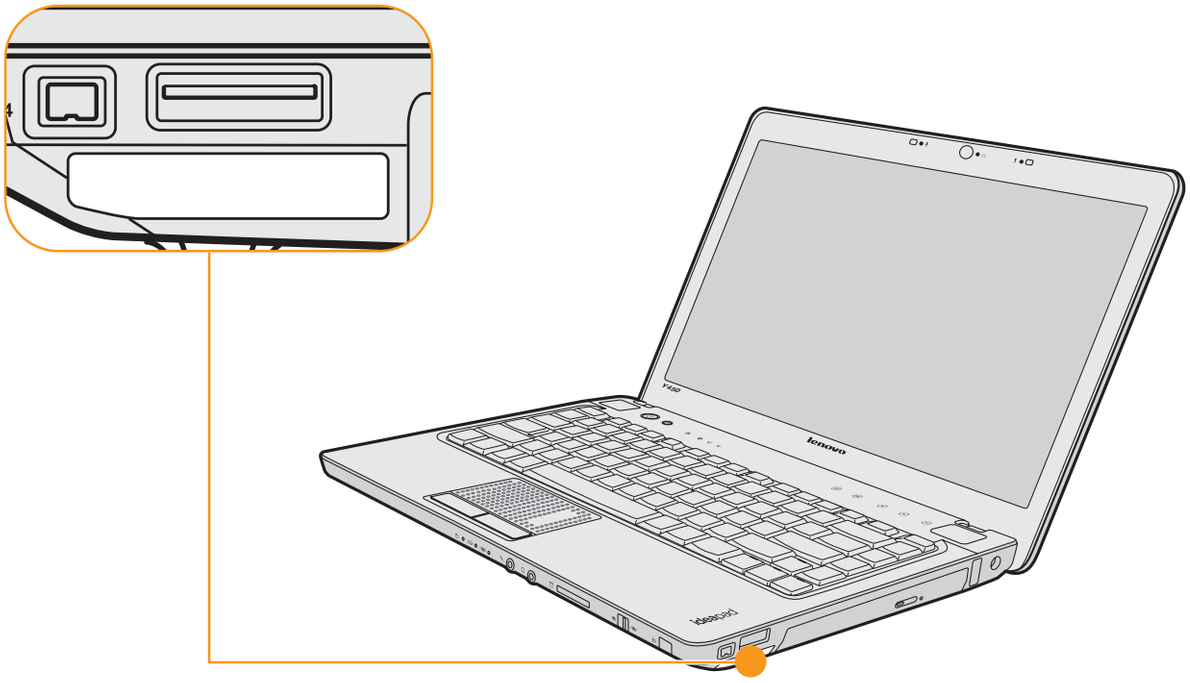

## Inserting an ExpressCard device

Gently slide the ExpressCard device with the front label facing upward. Slide until it clicks into place.

## Removing an ExpressCard device

1. Push the ExpressCard device until you hear a click.
2. Gently pull the ExpressCard device out of the ExpressCard slot.

**Note:**

Before removing the ExpressCard device, stop it from working by Windows **Safely Remove Hardware** utility, otherwise it may corrupt your data or even damage the device.

# Connecting an external display

You can connect an external display to your computer.

## Connecting a VGA monitor

You can connect a VGA monitor by using a VGA port. To connect a VGA monitor, plug the display cable to VGA port on your computer. To shift to other connected display devices, press **Fn + F3**.

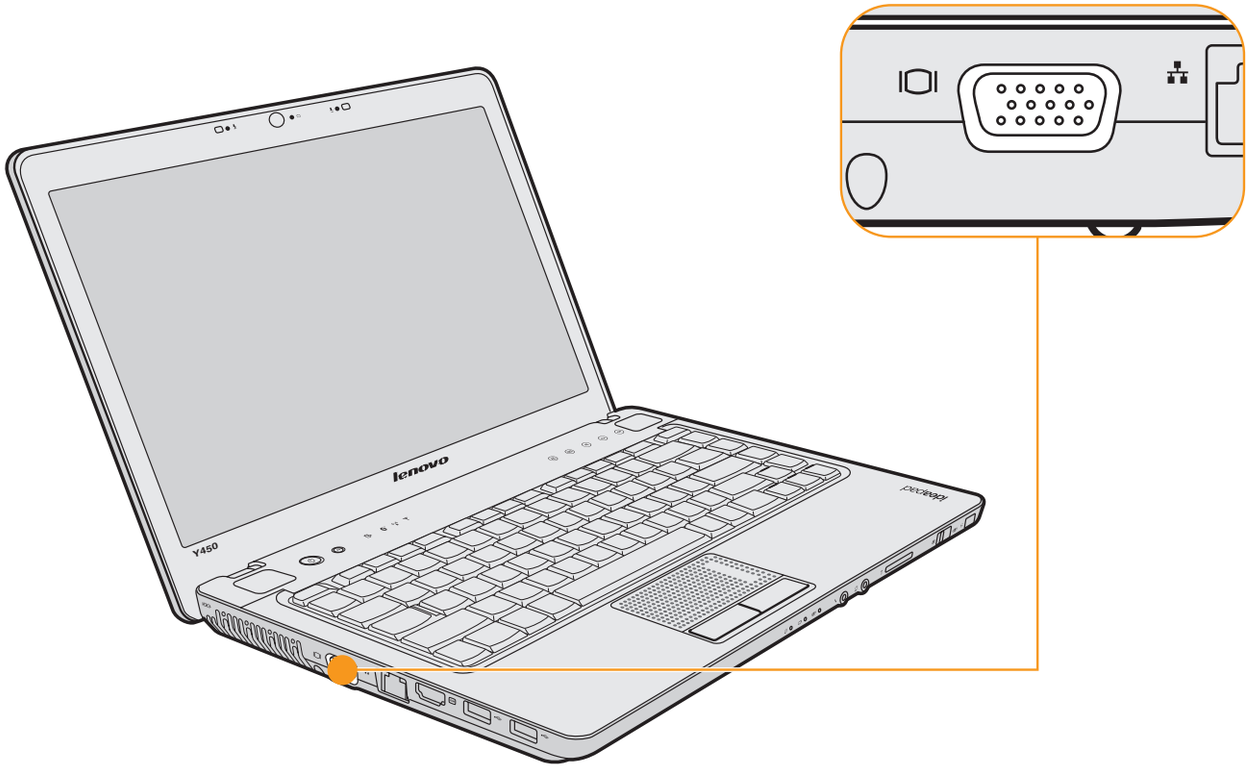

## Connecting an HDMI monitor

You can connect an HDMI monitor by using an HDMI port. To shift to other connected display devices, press **Fn + F3**.

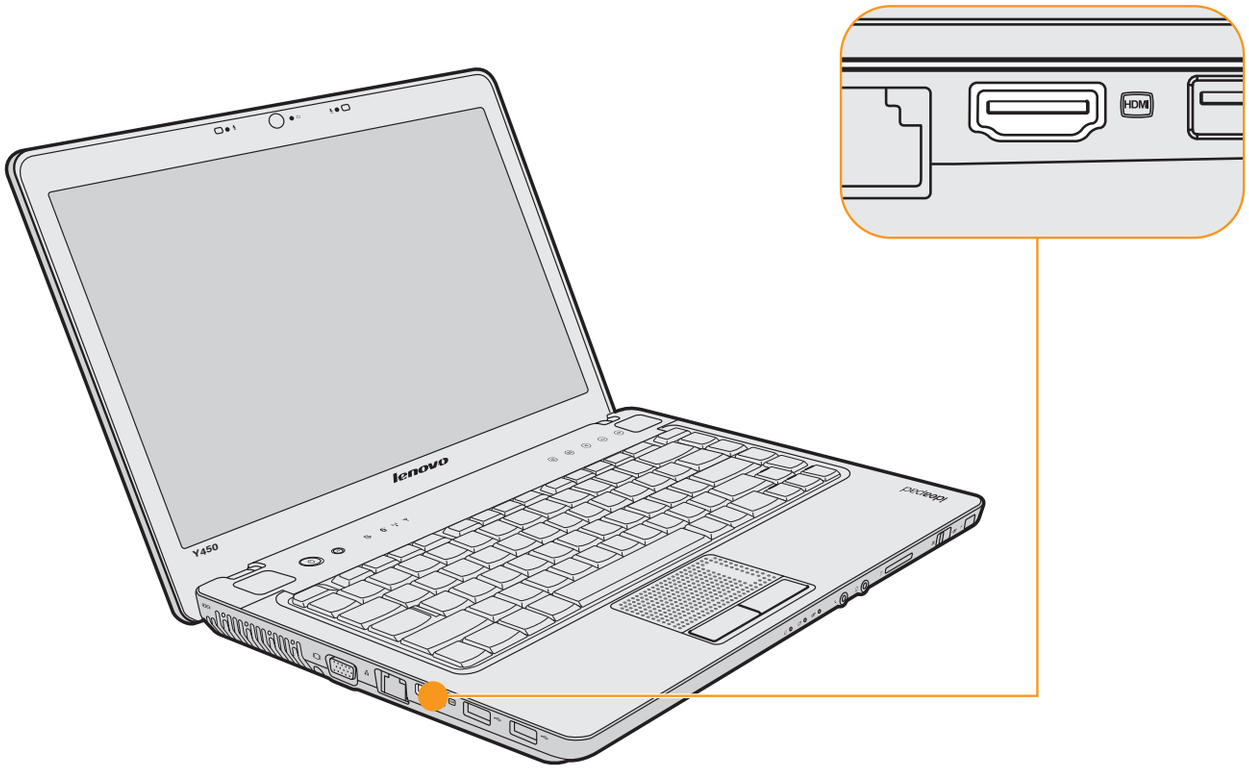

## Connecting a headphone and audio device

Your computer comes with a headphone jack (S/PDIF) used for connecting headphones, speakers, and audio devices that are compatible with the S/PDIF interface.

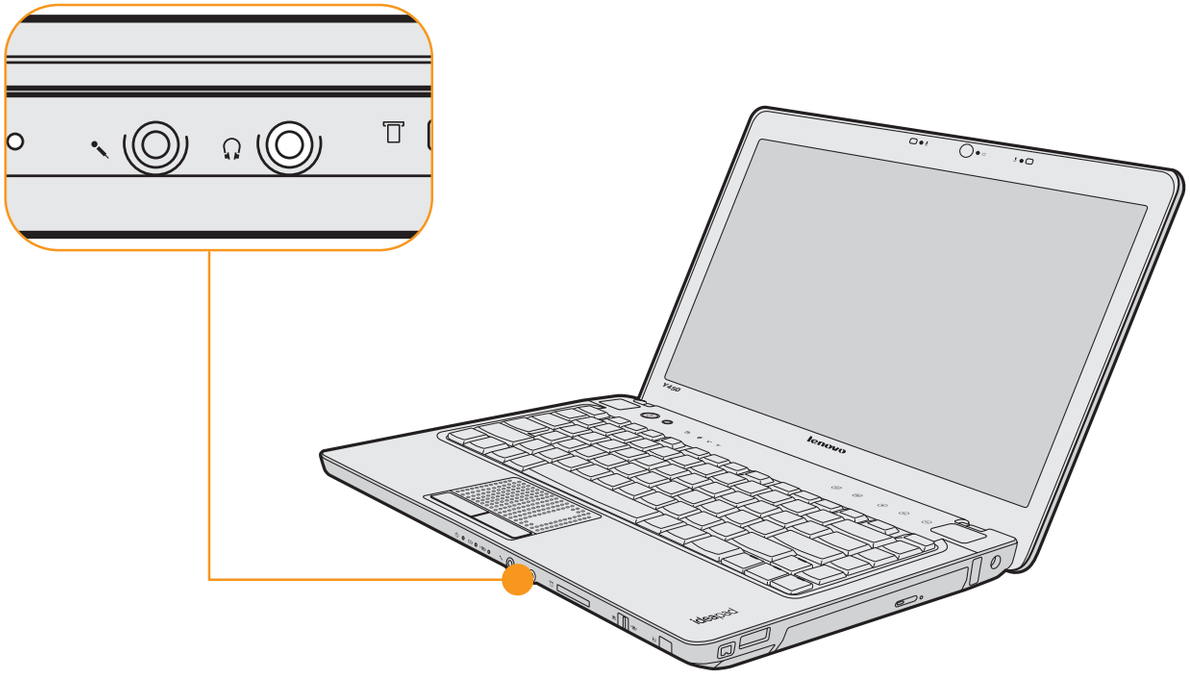

➢ **Warning:**

Listening to music at high volume over extended periods of time may damage your hearing.
Excessive use of headphones or earphones for a long period of time at high volume can be dangerous if the output of the headphones or earphone connectors do not comply with specifications of EN 50332-2. The headphone output connector of your computer complies with EN 50332-2 Sub clause 7. This specification limits the computer's maximum wide band true RMS output voltage to 150 mV. To help protect against hearing loss, ensure that the headphones or earphones you use also comply with EN 50332-2 (Clause 7 limits) for a wide band characteristic voltage of 75 mV. Using headphones that do not comply with EN 50332-2 can be dangerous due to excessive sound pressure levels.

## Connecting an external microphone

Your computer comes with an external microphone jack used for connecting an external microphone.

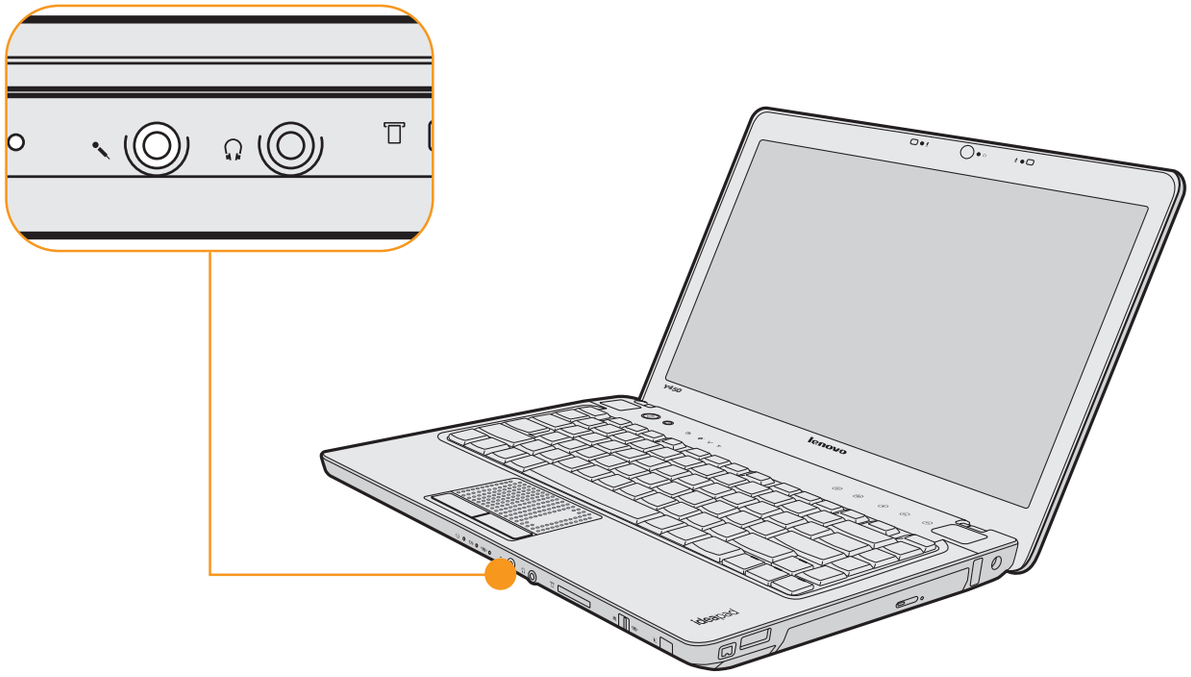

## Connecting *Bluetooth* enabled devices (specific models only)

If your computer has an integrated *Bluetooth* adapter card, it can connect to and transfer data wirelessly to other *Bluetooth* enabled devices, such as laptop computers, PDAs and cell phones.

### Enabling *Bluetooth* communications

1. Slide the integrated wireless device switch to the right.
2. Press **Fn + F5** to make configuration.

❖ **Note:**

When you do not need to use the *Bluetooth* function, turn it off to save battery power.
For details on connecting other *Bluetooth* enabled devices (market available), please refer to the instructions shipped with the devices that you have purchased separately.

# Chapter 4. Troubleshooting

## Frequently asked questions

This section lists frequently asked questions and tells where you can find detailed answers. For details about each publication included in the package with your computer, see *Lenovo IdeaPad Y450 Setup Poster*.

**What safety precautions should I follow when using my computer?**

See "Chapter 6. Safety, use, and care information" for detailed information about safety.

**How can I prevent problems with my computer?**

See "Chapter 6. Safety, use, and care information" on page 63 of this guide. More tips can be found in Chapter 1 and 2.

**What are the main hardware features of my new computer?**

More information can be found in Chapter 1 and 2.

**Where can I find the detailed specifications for my computer?**

See http://consumersupport.lenovo.com.

**I need to upgrade a device *or* I need to replace one of the following: the hard disk drive, memory, or the keyboard.**

See "Appendix B. Customer Replaceable Units (CRUs)" on page 113 of this guide.

**My computer is not operating properly.**

Study the relevant information in Chapter 2.

**Where are the recovery discs?**

Your computer did not come with a recovery disc. For an explanation of the alternative recovery methods offered by Lenovo, see *OneKey Rescue System User Guide*.

**How can I contact the Customer Support Center?**

See "Chapter 5. Getting help and service" on page 58 of this Guide. For the phone numbers of the Customer Support Center nearest to you, see "Lenovo warranty service telephone numbers" on page 111.

**Where can I find warranty information?**

For the warranty applicable to your computer, including the warranty period and type of warranty service, see "Appendix A. Lenovo limited warranty" on page 97.

# Troubleshooting

If you do not find your problem here, see Chapter 2. The following section only describes problems that might prevent you from accessing the comprehensive information in Chapter 2.

## Display problems

### When I turn on the computer, nothing appears on the screen.

**Note:**

If you are using an external monitor, see "Computer screen problems" on page 53.

- If the screen is blank, make sure that:
  - The battery is installed correctly.
  - The AC adapter is connected to the computer and the power cord is plugged into a working electrical outlet.
  - The computer power is on. (Press the power button again for confirmation.)
  - The memory is installed correctly.
- If these items are properly set, and the screen remains blank, have the computer serviced.

### When I turn on the computer, only a white cursor appears on a blank screen.

Restore backed-up files to your Windows environment or the entire contents of your hard disk to the original factory contents using OneKey Recovery. If you still see only the cursor on the screen, have the computer serviced.

### My screen goes blank while the computer is on.

Your screen saver or power management may be enabled. Do one of the following to exit from the screen saver or to resume from sleep or hibernation mode:

- Touch the touchpad.
- Press any key on the keyboard.
- Press the power button.

## A password problem

### I forgot my password.

- If you forgot your user password, you must take your computer to a Lenovo authorized servicer or a marketing representative to have the password canceled.
- If you forgot your HDD password, Lenovo authorized servicer cannot reset your password or recover data from the hard disk. You must take your computer to a Lenovo authorized servicer or a marketing representative to have the hard disk drive replaced. Proof of purchase is required, and a fee will be charged for parts and service.
- If you forget your supervisor password, Lenovo authorized servicer cannot reset your password. You must take your computer to a Lenovo authorized servicer or a marketing representative to have the system board replaced. Proof of purchase is required, and a fee will be charged for parts and service.

## Keyboard problems

### A number appears when you enter a letter.

The numeric lock function is on. To disable it, press **Fn + F8**.

## Sleep or hibernation problems

### The computer enters sleep mode unexpectedly.

If the processor overheats, the computer automatically enters sleep mode to allow the computer to cool and to protect the processor and other internal components. Check the settings for sleep mode.

### The computer enters sleep mode (the sleep indicator turns on) immediately after Power-on self-test (POST).

Make sure that:

- The battery is charged.
- The operating temperature is within the acceptable range. See "Specifications" on page 114.

If the battery is charged and the temperature is within range, have the computer serviced.

### The critical low-battery error message appears, and the computer immediately turns off.

The battery power is getting low. Connect the AC adapter to the computer, or replace the battery with a fully charged one.

### The computer does not return from sleep mode, or the sleep indicator stays on and the computer does not work.

If the computer does not return from sleep mode, it may have entered hibernation mode automatically because the battery is depleted. Check the sleep indicator.

- If the sleep indicator is on, your computer is in sleep mode. Connect the AC adapter to the computer; then press any key or the power button.
- If the sleep indicator is off, your computer is in sleep/hibernation mode or power-off state. Connect the AC adapter to the computer; then press the power button to resume operation.

If the system still does not return from sleep mode, your system has stopped responding, and you cannot turn off the computer; reset the computer. Unsaved data may be lost. To reset the computer, press and hold the power button for 4 seconds or more. If the computer is still not reset, remove the AC adapter and the battery.

## Computer screen problems

### The screen is blank.

Do the following:

- If you are using the AC adapter, or using the battery, and the battery status indicator is on, press **Fn +** ↑ to make the screen brighter.
- If the power indicator is in blinking, press any key or the power button to resume from the sleep mode.
- If you still have the problem, do the Solution in the following problem "The screen is unreadable or distorted."

### The screen is unreadable or distorted.

Make sure that:

- The display device driver is installed correctly.
- The screen resolution and color quality are correctly set.
- The monitor type is correct.

### Incorrect characters appear on the screen.

Did you install the operating system or application program correctly? If they are installed and configured correctly, have the computer serviced.

### A message, "Unable to create overlay window," appears when you try to start DVD playback.
***-or-***
### You get poor or no playback while running video playback, DVD playback, or game applications.

Do either of the following:

- If you are using 32-bit color mode, change the color depth to 16-bit mode.
- If you are using a display resolution of 1366×768 or larger, reduce the display resolution and the color depth.

## Sound problems

### No sound can be heard from the speaker even when the volume is turned up.

Make sure that:

- The Mute function is off.
- The headphone jack is not used.
- Speakers is selected as a playback device.

## Battery problems

### Your computer shuts down before the battery status indicator shows empty.
***-or-***
### Your computer operates after the battery status indicator shows empty.

Discharge and recharge the battery.

### The operating time for a fully charged battery is short.

For details, see “Handling the battery” in Chapter 2.

### The computer does not operate with a fully charged battery.

The surge protector in the battery might be active. Turn off the computer for one minute to reset the protector; then turn on the computer again.

### The battery does not charge.

For details, see “Handling the battery” in Chapter 2.

## A hard disk drive problem

### The hard disk drive does not work.

Make sure that the hard disk drive is included in the Boot menu in BIOS Setup Utility correctly.

## A startup problem

### The Microsoft® Windows operating system does not start.

Use the OneKey Recovery to help solve or identify your problem. For details about OneKey Recovery, see *OneKey Rescue System User Guide*.

## Other problems

### Your computer does not respond.

- To turn off your computer, press and hold the power button for 4 seconds or more. If the computer still does not respond, remove the AC adapter and the battery.
- Your computer might lock when it enters sleep mode during a communication operation. Disable the sleep timer when you are working on the network.

### The computer does not start from a device you want.

See the Boot menu of the BIOS Setup Utility. Make sure that the startup sequence in the BIOS Setup Utility is set so that the computer starts from the device you want. Also make sure that the device from which the computer starts is enabled.

# Chapter 5. Getting help and service

## Getting help and service

If you need help, service, technical assistance, or just want more information about Lenovo computers, you will find a wide variety of sources available from Lenovo to assist you. This section contains information about where to go for additional information about Lenovo computers, what to do if you experience a problem with your computer, and whom to call for service should it be necessary.

Microsoft Service Packs are the latest software source for Windows product updates. They are available by means of a Web download (connection charges may apply) or from a disc. For more specific information and links, go to the Microsoft Web site at http://www.microsoft.com. Lenovo offers Up and Running technical assistance with installation of, or questions related to, Service Packs for your Lenovo-preinstalled Microsoft Windows product.

## Getting help on the Web

The Lenovo Web site on the World Wide Web has up-to-date information about Lenovo computers and support. The address for the Lenovo home page is http://consumersupport.lenovo.com.

You can find support information for your Lenovo IdeaPad™ computer at http://consumersupport.lenovo.com. Research this Web site to learn how to solve problems, find new ways to use your computer, and learn about options that can make working with your Lenovo computer even easier.

## Calling the Customer Support Center

If you have tried to correct the problem yourself and still need help, during the warranty period, you can get help and information by telephone through the Customer Support Center. The following services are available during the warranty period:

- Problem determination - Trained personnel are available to assist you with determining if you have a hardware problem and deciding what action is necessary to fix the problem.
- Lenovo hardware repair - If the problem is determined to be caused by Lenovo hardware under warranty, trained service personnel are available to provide the applicable level of service.

- Engineering change management - Occasionally, there might be changes that are required after a product has been sold. Lenovo or your reseller, if authorized by Lenovo, will make selected Engineering Changes (ECs) available that apply to your hardware.

The following items are not covered:

- Replacement or use of parts not manufactured for or by Lenovo or non warranted parts
- Identification of software problem sources
- Configuration of BIOS as part of an installation or upgrade
- Changes, modifications, or upgrades to device drivers
- Installation and maintenance of network operating systems (NOS)
- Installation and maintenance of application programs

To determine if your Lenovo hardware product is under warranty and when the warranty expires, go to http://consumersupport.lenovo.com, and click **Warranty**, then follow the instructions on the screen.

Refer to your Lenovo hardware warranty for a full explanation of Lenovo warranty terms. Be sure to retain your proof of purchase to obtain warranty service.

If possible, be near your computer when you make your call in case the technical assistance representative needs to help you resolve a computer problem. Please ensure that you have downloaded the most current drivers and system updates, and recorded information before you call. When

calling for technical assistance, please have the following information available:

- Machine Type and Model
- Serial numbers of your computer, monitor, and other components, or your proof of purchase
- Description of the problem
- Hardware and software configuration information for your system

The telephone numbers for your Customer Support Center location are located in "Appendix A. Lenovo limited warranty" on page 97.

**Note:**

Telephone numbers are subject to change without notice. For the latest list of Customer Support Center telephone numbers and hours of operation, visit the support Web site at http://consumersupport.lenovo.com. If the number for your country or region is not listed, contact your Lenovo reseller or Lenovo marketing representative.

## Getting help around the world

If you travel with your computer or relocate it to a country where your Lenovo machine type is sold, your computer might be eligible for International Warranty Service, which automatically entitles you to obtain warranty service throughout the warranty period. Service will be performed by service providers authorized to perform warranty service.

Service methods and procedures vary by country, and some services might not be available in all countries. Service centers in certain countries might not be able to service all models of a particular machine type. In some countries, fees and restrictions might apply at the time of service.

To determine whether your computer is eligible for International Warranty Service and to view a list of the countries where service is available, go to http://consumersupport.lenovo.com, click Warranty, and follow the instructions on the screen.

# Chapter 6. Safety, use, and care information

## Important safety information

This information can help you safely use your notebook personal computer. Follow and retain all information included with your computer. The information in this document does not alter the terms of your purchase agreement or the Lenovo Limited Warranty. For more information, see "Appendix A. Lenovo limited warranty" on page 97.

Customer safety is important. Our products are developed to be safe and effective. However, personal computers are electronic devices. Power cords, power adapters, and other features can create potential safety risks that can result in physical injury or property damage, especially if misused. To reduce these risks, follow the instructions included with your product, observe all warnings on the product and in the operating instructions, and review the information included in this document carefully. By carefully following the information contained in this document and provided with your product, you can help protect yourself from hazards and create a safer computer work environment.

**Note:**

This information includes references to power adapters and batteries. In addition to notebook computers, some products (such as speakers and monitors) ship with external power adapters. If you have such a product, this information applies to your product. In addition, computer products contain a coin-sized internal battery that provides power to the system clock even when the computer is unplugged, so the battery safety information applies to all computer products.

## Conditions that require immediate action

Products can become damaged due to misuse or neglect. Some product damage is serious enough that the product should not be used again until it has been inspected and, if necessary, repaired by an authorized servicer.

As with any electronic device, pay close attention to the product when it is turned on. On very rare occasions, you might notice an odor or see a puff of smoke or sparks vent from your product. Or you might hear sounds like popping, cracking, or hissing. These conditions might merely mean that an internal electronic component has failed in a safe and controlled manner. Or, they might indicate a potential safety issue. However, do not take risks or attempt to diagnose the situation yourself. Contact the Customer Support Center for further guidance. For a list of Service and Support phone numbers, see http://consumersupport.lenovo.com.

Frequently inspect your computer and its components for damage or wear or signs of danger. If you have any question about the condition of a component, do not use the product. Contact the Customer Support Center or the product manufacturer for instructions on how to inspect the product and have it repaired, if necessary.

In the unlikely event that you notice any of the following conditions, or if you have any safety concerns with your product, stop using the product and unplug it from the power source and telecommunication lines until you can speak to the Customer Support Center for further guidance.

- Power cords, plugs, power adapters, extension cords, surge protectors, or power supplies that are cracked, broken, or damaged.
- Signs of overheating, smoke, sparks, or fire.

- Damage to a battery (such as cracks, dents, or creases), discharge from a battery, or a buildup of foreign substances on the battery.
- A cracking, hissing, or popping sound, or strong odor that comes from the product.
- Signs that liquid has been spilled or an object has fallen onto the computer product, the power cord, or power adapter.
- The computer product, power cord, or power adapter has been exposed to water.
- The product has been dropped or damaged in any way.
- The product does not operate normally when you follow the operating instructions.

❖ **Note:**

If you notice these conditions with a product (such as an extension cord) that is not manufactured for or by Lenovo, stop using that product until you can contact the product manufacturer for further instructions, or until you get a suitable replacement.

## Safety guidelines

Always observe the following precautions to reduce the risk of injury and property damage.

## Service and upgrades

**Attention:**

Do not attempt to service a product yourself unless instructed to do so by the Customer Support Center or your documentation. Only use a service provider who is approved to repair your particular product.

**Note:**

Some computer parts can be upgraded or replaced by the customer. Upgrades typically are referred to as options. Replacement parts approved for customer installation are referred to as Customer Replaceable Units, or CRUs. Lenovo provides documentation with instructions when it is appropriate for customers to install options or replace CRUs. You must closely follow all instructions when installing or replacing parts. The Off state of a power indicator does not necessarily mean that voltage levels inside a product are zero. Before you remove the covers from a product equipped with an ac power cord, always make sure that the power is turned off and that the product is unplugged from any power source. For more information on CRUs, see "Appendix B. Customer Replaceable Units (CRUs)" on page 113. If you have any questions or concerns, contact the Customer Support Center.

Although there are no moving parts in your computer after the power cord has been disconnected, the following warnings are required for your safety.

**Danger:**

Hazardous moving parts. Keep fingers and other body parts away.

**Attention:**

Before replacing any CRUs, turn off the computer and wait three to five minutes to let the computer cool before opening the cover.

## Power cords and power adapters

**Danger:**

Use only the power cords and power adapters supplied by the product manufacturer. The power cord and power adapter are intended for use with this product only. They should never be used with any other product.

The power cords shall be safety approved. For Germany, it shall be H03VV-F, 3G, 0.75 $mm^2$, or better. For other countries, the suitable types shall be used accordingly.

Never wrap a power cord around a power adapter or other object. Doing so can stress the cord in ways that can cause the cord to fray, crack, or crimp. This can present a safety hazard.

Always route power cords or any other cables so that they will not be walked on, tripped over, or pinched by objects.

Protect power cords and power adapters from liquids. For instance, do not leave your power cord or power adapter near sinks, tubs, toilets, or on floors that are cleaned with liquid cleansers. Liquids can cause a short circuit, particularly if the power cord or power adapter has been stressed by misuse. Liquids also can cause gradual corrosion of power cord

terminals and/or the connector terminals on a power adapter, which can eventually result in overheating.

Always connect power cords and signal cables in the correct order and ensure that all power cord connectors are securely and completely plugged into receptacles.

Do not use any power adapter that shows corrosion at the ac input pins or shows signs of overheating (such as deformed plastic) at the ac input or anywhere on the power adapter.

Do not use any power cords where the electrical contacts on either end show signs of corrosion or overheating or where the power cord appears to have been damaged in any way.

## Extension cords and related devices

**Danger:**

Ensure that extension cords, surge protectors, uninterruptible power supplies, and power strips that you use are rated to handle the electrical requirements of the product. Never overload these devices. If power strips are used, the load should not exceed the power strip input rating. Consult an electrician for more information if you have questions about power loads, power requirements, and input ratings.

## Plugs and outlets

**Danger:**

If a receptacle (power outlet) that you intend to use with your computer equipment appears to be damaged or corroded, do not use the outlet until it is replaced by a qualified electrician.

Do not bend or modify the plug. If the plug is damaged, contact the manufacturer to obtain a replacement.

Do not share an electrical outlet with other home or commercial appliances that draw large amounts of electricity; otherwise, unstable voltage might damage your computer, data, or attached devices.

Some products are equipped with a three-pronged plug. This plug fits only into a grounded electrical outlet. This is a safety feature. Do not defeat this safety feature by trying to insert it into a non-grounded outlet. If you cannot insert the plug into the outlet, contact an electrician for an approved

outlet adapter or to replace the outlet with one that enables this safety feature. Never overload an electrical outlet. The overall system load should not exceed 80 percent of the branch circuit rating. Consult an electrician for more information if you have questions about power loads and branch circuit ratings.

Be sure that the power outlet you are using is properly wired, easily accessible, and located close to the equipment. Do not fully extend power cords in a way that will stress the cords.

Be sure that the power outlet provides the correct voltage and current for the product you are installing.

Carefully connect and disconnect the equipment from the electrical outlet.

## Power supply statement

**Danger:**

Never remove the cover on a power supply or any part that has the following label attached.

Hazardous voltage, current, and energy levels are present inside any component that has this label attached. There are no serviceable parts inside these components. If you suspect a problem with one of these parts, contact a service technician.

## Lithium coin cell battery notice

**Danger:**

Danger of explosion if battery is incorrectly replaced.

When replacing the lithium coin cell battery, use only the same or an equivalent type that is recommended by the manufacturer. The battery contains lithium and can explode if not properly used, handled, or disposed of.

Do not:

- Throw or immerse into water
- Heat to more than 100°C (212°F)
- Repair or disassemble

Dispose of the battery as required by local ordinances or regulations.

The following statement applies to users in the state of California, U.S.A.

California Perchlorate Information:

Products containing CR (manganese dioxide) lithium coin cell batteries may contain perchlorate.

Perchlorate Material — special handling may apply.
See http://www.dtsc.ca.gov/hazardouswaste/perchlorate.

## Heat and product ventilation

**Danger:**

Computers, AC adapters, and many accessories can generate heat when turned on and when batteries are charging. Notebook computers can generate a significant amount of heat due to their compact size. Always follow these basic precautions:

- When your computer is turned on or the battery is charging, the base, the palm rest, and some other parts may become hot. Avoid keeping your hands, your lap, or any other part of your body in contact with a hot section of the computer for any extended length of time. When you use the keyboard, avoid keeping your palms on the palm rest for a prolonged period of time. Your computer generates some heat during normal operation. The amount of heat depends on the amount of system activity and the battery charge level. Extended contact with your body, even through clothing, could cause discomfort or even a skin burn. Periodically take breaks from using the keyboard by lifting your hands from the palm rest; and be careful not to use the keyboard for any extended length of time.
- Do not operate your computer or charge the battery near flammable materials or in explosive environments.
- Ventilation slots, fans and/or heat sinks are provided with the product for safety, comfort, and reliable operation. These features might inadvertently become blocked by placing the product on a bed, sofa, carpet, or other flexible surface. Never block, cover, or disable these features.

- When the AC adapter is connected to an electrical outlet and your computer, it generates heat. Do not place the adapter in contact with any part of your body while using it. Never use the AC adapter to warm your body. Extended contact with your body, even through clothing, may cause a skin burn.

For your safety, always follow these basic precautions with your computer:

- Keep the cover closed whenever the computer is plugged in.
- Regularly inspect the outside of the computer for dust accumulation.
- Remove dust from vents and any perforations in the bezel. More frequent cleanings might be required for computers in dusty or high-traffic areas.
- Do not restrict or block any ventilation openings.
- Do not operate your computer inside furniture, as this might increase the risk of overheating.
- Airflow temperatures into the computer should not exceed 35° C (95° F).

## Safety information related to Mobile Broadband

- Do not use the Mobile Broadband feature on your computer in highly flammable areas (e.g. gas station) or near blasting. Though it is rare, the Mobile Broadband module, like other cellular network devices, could generate a spark.
- Avoid using Mobile Broadband feature outdoors during a thunderstorm.
- Use of mobile devices on board aircraft is explicitly prohibited by many airlines companies, especially during take-off and landing. The built-in Mobile Broadband module on your computer is a low-power radio transceiver. When it is turned on, it intermittently receives and transmits radio frequency (RF) energy which could cause interference with the operation of the airplane communication or navigation system. Refer to rules or regulations of your airline company for Mobile Broadband use. Never enable Mobile Broadband feature on your computer unless you are explicitly permitted to do so.
- Follow restrictions when using your computer in hospitals. Some equipments in hospitals are sophisticated and are susceptible to electromagnetic interference. Do not enable Mobile Broadband feature near medical equipment without requesting permission.

- The Mobile Broadband communication may affect the operation of implanted cardiac pacemakers and other medically implanted equipment. Patients with cardiac pacemakers should be well aware that use of Mobile Broadband feature on this computer may cause the implanted device to malfunction. If patients have any doubt that there is interference taking place, immediately disable the wireless radio on the computer and contact the doctor for more information.
- The Mobile Broadband module embedded in your computer does not support voice calls, hence their use for essential communications is not possible. Therefore you should never rely upon the device for essential communications.

## CD and DVD drive safety

**Danger:**

CD and DVD drives spin discs at a high speed. If a CD or DVD is cracked or otherwise physically damaged, it is possible for the disc to break apart or even shatter when the CD drive is in use. To protect against possible injury due to this situation, and to reduce the risk of damage to your computer, do the following:

- Always store CD/DVD discs in their original packaging.
- Always store CD/DVD discs out of direct sunlight and away from direct heat sources.
- Remove CD/DVD discs from the computer when not in use.
- Do not bend or flex CD/DVD discs, or force them into the computer or their packaging.
- Check CD/DVD discs for cracks before each use. Do not use cracked or damaged discs.

## Electrical current safety information

**Danger:**

Electric current from power, telephone, and communication cables is hazardous.

To avoid a shock hazard:

- Do not use your computer during a lightning storm.
- Do not connect or disconnect any cables or perform installation, maintenance, or reconfiguration of this product during an electrical storm.
- Connect all power cords to a properly wired and grounded electrical outlet.
- Connect to properly wired outlets any equipment that will be attached to this product.
- Whenever possible, use one hand only to connect or disconnect signal cables.
- Never turn on any equipment when there is evidence of fire, water, or structural damage.
- Disconnect the attached power cords, battery pack, and all the cables before you open the device covers, unless instructed otherwise in the installation and configuration procedures.
- Do not use your computer until you have closed the cover. Never use the computer when the cover is open.

- Connect and disconnect cables as described in the following procedures when installing, moving, or opening covers on this product or attached devices.

  To connect:

  1. Turn everything OFF.
  2. First, attach all cables to devices.
  3. Attach signal cables to connectors.
  4. Attach power cords to outlets.
  5. Turn devices ON.

  To disconnect:

  1. Turn everything OFF.
  2. First, remove power cords from outlets.
  3. Remove signal cables from connectors.
  4. Remove all cables from devices.

The power cord must be disconnected from the wall outlet or receptacle before installing all other electrical cables connected to your computer.

The power cord may be reconnected to the wall outlet or receptacle only after all other electrical cables have been connected to the computer.

## Laser compliance statement

Some personal computer models are equipped from the factory with a CD or DVD drive. CD and DVD drives are also sold separately as options. CD and DVD drives are laser products. The drive's classification label (shown below) is on the surface of the drive.

CLASS 1 LASER PRODUCT
LASER KLASSE 1
LUOKAN 1 LASERLAITE
APPAREIL A LASER DE CLASSE 1
KLASS 1 LASER APPARAT

Example of the label

These drives are certified in the U.S. to conform to the requirements of the Department of Health and Human Services 21 Code of Federal Regulations (DHHS 21 CFR) Subchapter J for Class 1 laser products. Elsewhere, these drives are certified to conform to the requirements of the International Electrotechnical Commission (IEC) 60825-1 and CENELEC EN 60825-1 for Class 1 laser products.

Class 1 laser products are not considered hazardous. The design of the laser system and the optical storage drive ensures that there is no exposure to laser radiation above a Class 1 level during normal operation, user maintenance, or servicing.

**When a CD or DVD drive is installed, note the following handling instructions.**

**Danger:**

Use of controls, adjustments, or performance of procedures other than those specified herein might result in hazardous radiation exposure.

Do not remove the drive covers. Removing the covers of the CD or DVD drive could result in exposure to hazardous laser radiation. There are no serviceable parts inside the CD or DVD drive.

**Some CD and DVD drives contain an embedded Class 3A or Class 3B laser diode. Note the following statement.**

**Danger:**

Laser radiation when open. Do not stare into the beam, do not view directly with optical instruments, and avoid direct exposure to the beam.

## Liquid Crystal Display (LCD) notice

**Attention:**

Mercury Information (does not apply to LED backlit models):
The fluorescent lamp in the liquid crystal display contains mercury; dispose according to local, state or federal laws.

The LCD is made of glass, and rough handling or dropping the computer can cause the LCD to break. If the LCD breaks and the internal liquid crystal material contacts the eyes, mouth or clothing, take the following actions immediately :

In case contact to the eyes or mouth, rinse with large amount of running water for more than 15 minutes. If any symptoms are present after washing, get medical care.

In case contact to the skin or clothing, wipe it immediately and wash with soap and large amount of running water for more than 15 minutes. The skin or clothing maybe damaged if liquid crystal material is left adhered.

## Caring your computer

Though your computer is designed to function reliably in normal work environments, you need to use common sense in handling it. By following these important tips, you will get the most use and enjoyment out of your computer.

### Be careful about where and how you work

- Do not leave the base of your computer, or any other part that becomes hot during operation, in contact with your lap or any part of your body for an extended period when the computer is functioning or when the battery is charging. Your computer dissipates some heat during normal operation. This heat is a function of the level of system activity and battery charge level. Extended contact with your body, even through clothing, could cause discomfort or, eventually, a skin burn.
- When the AC adapter is connected to an electrical outlet and your computer, it generates heat. Do not place the adapter in contact with any part of your body while using it. Never use the AC adapter to warm your body. Extended contact with your body, even through clothing, may cause a skin burn.
- Route the cables of an AC adapter, a mouse, a keyboard, a printer, or any other electronic device, or communication lines, so that they cannot be walked on, tripped over, pinched by your computer or other objects, or in any way subjected to treatment that could disturb the operation of your computer. Applying strong force to the cables may damage or break them.

- Place liquids away from your computer to avoid spills, and keep your computer away from water (to avoid the danger of electrical shock).
- Do not eat or smoke over your keyboard. Particles that fall into your keyboard can cause damage.
- Store packing materials safely out of the reach of children to prevent the risk of suffocation from plastic bags.
- Keep your computer away from magnets, activated cellular phones, electrical appliances, or speakers (within 13 cm or 5 in).
- Avoid subjecting your computer to extreme temperatures (below 5°C/41°F or above 35°C/95°F).
- Some appliances, such as certain portable desktop fans or air purifiers, can produce negative ions. If a computer is close to such an appliance, and is exposed for an extended time to air containing negative ions, it may become electrostatically charged. Such a charge may be discharged through your hands when you touch the keyboard or other parts of the computer, or through connectors on I/O devices connected to it. Even though this kind of electrostatic discharge (ESD) is the opposite of a discharge from your body or clothing to the computer, it poses the same risk of a computer malfunction.

  Your computer is designed and manufactured to minimize any effects of electrostatic charge. An electrostatic charge above a certain limit, however, can increase the risk of ESD. Therefore, when using the computer close to an appliance that can produce negative ions, give special attention to the following:
  - Avoid directly exposing your computer to the air from an appliance that can produce negative ions.
  - Keep your computer and peripherals as far as possible from such an appliance.

- Wherever possible, ground your computer to facilitate safe electrostatic discharge.

❖ **Note:**

Not all such appliances cause a significant electrostatic charge.

When you handle options or CRUs, or perform any work inside the computer, take the following precautions to avoid static-electricity damage:

- Limit your movement. Movement can cause static electricity to build up around you.
- Always handle components carefully. Handle adapters, memory modules, and other circuit boards by the edges. Never touch exposed circuitry.
- Prevent others from touching components.
- When you install a static-sensitive option or CRU, touch the static-protective package containing the part to a metal expansion-slot cover or other unpainted metal surface on the computer for at least two seconds. This reduces static electricity in the package and your body.
- Whenever possible, remove the static-sensitive part from the static-protective packaging and install the part without setting it down. When this is not possible, place the static-protective packaging on a smooth, level surface and place the part on it.
- Do not place the part on the computer cover or other metal surface.

## Be gentle with your computer

- Avoid placing any objects (including paper) between the display and the keyboard or under the keyboard.
- Do not drop, bump, scratch, twist, hit, vibrate, push, or place heavy objects on your computer, display, or external devices.
- Avoid turning the display by over 130°.

## Carry your computer properly

- Before moving your computer, be sure to remove any media, turn off attached devices, and disconnect cords and cables.
- Be sure your computer is in sleep or hibernation mode, or turned off, before moving it. This will prevent damage to the hard disk drive and data loss.
- When picking up your open computer, hold it by the bottom. Do not pick up or hold your computer by the display.
- Use a quality carrying case that provides adequate cushion and protection. Do not pack your computer in a tightly packed suitcase or bag.

## For outdoor use

- Backup your critical data before you take your computer outdoors.
- Ensure that the battery is full.
- Be sure to turn off the power and close the LCD well.
- Do not leave anything between the closed LCD and the keyboard.

- When you leave the computer in your car, place it on the back seat to avoid being insolated.
- Carry the AC adapter and power cord with the computer.

## Handle storage media and drives properly

- If your computer comes with an optical drive, do not touch the surface of a disc or the lens on the tray.
- Wait until you hear the CD or DVD click into the center pivot of an optical drive before closing the tray.
- When installing your hard disk, follow the instructions shipped with your hardware, and apply pressure only where needed on the device.

## Data safety

- Do not delete unknown files or change the name of files or directories that were not created by you; otherwise, your computer software might fail to work.
- Be aware that accessing network resources can leave your computer vulnerable to computer viruses, hackers, spyware, and other malicious activities that might damage your computer, software, or data.
- It is your responsibility to ensure that you have adequate protection in the form of firewalls, antivirus software, and anti-spyware software and keep this software up to date.

## Take care in setting passwords

- Remember your passwords. If you forget a supervisor or hard disk password, Lenovo authorized service providers will not reset it, and you might have to replace your system board or hard disk drive.

## Other important tips

- Your computer might have both an Ethernet connector and a modem connector. If so, be sure to connect your communication cable to the correct one, so your connector is not damaged.
- Register your Lenovo products with Lenovo (refer to the Web page: http://consumersupport.lenovo.com). This can help authorities return your computer to you if it is lost or stolen. Registering your computer also enables Lenovo to notify you about possible technical information and upgrades.
- Only an authorized Lenovo repair technician should disassemble and repair your computer.
- Do not modify or tape the latches to keep the display open or closed.
- Take care not to turn your computer over while the AC adapter is plugged in. This could break the adapter plug.
- Turn off your computer if you are replacing a device, or else verify that the device is warm- or hot-swappable.
- Before you install any of the following devices, touch a metal table or a grounded metal object. This action reduces any static electricity from your body. The static electricity could damage the device.
  - ExpressCard

- Memory card, such as SD Card, MultiMediaCard, xD-Picture Card, and Memory Stick/Memory Stick Pro.
- Memory module

▪ When transferring data to or from a flash memory card, such as an SD card, do not put your computer in sleep or hibernation mode before the data transfer is complete. To do so might cause damage to your data.

## Cleaning the cover of your computer

Occasionally clean your computer as follows:

1. Prepare a mixture of a gentle kitchen-use detergent (one that does not contain abrasive powder or strong chemicals such as acid or alkaline). Use 5 parts water to 1 part detergent.
2. Absorb the diluted detergent into a sponge.
3. Squeeze excess liquid from the sponge.
4. Wipe the cover with the sponge, using a circular motion and taking care not to let any excess liquid drip.
5. Wipe the surface to remove the detergent.
6. Rinse the sponge with clean running water.
7. Wipe the cover with the clean sponge.
8. Wipe the surface again with a dry, soft lint-free cloth.

9. Wait for the surface to dry completely and remove any cloth fibers from the computer surface.

   ❖ **Note:**

   Shut down the computer and then disconnect the power cord before cleaning the computer.

## Cleaning your computer keyboard

1. Absorb some isopropyl rubbing alcohol on a soft, dust-free cloth.
2. Wipe each keytop surface with the cloth. Wipe the keys one by one; if you wipe several keys at a time, the cloth may hook onto an adjacent key and possibly damage it. Make sure that no liquid drips onto or between the keys.
3. Allow to dry.
4. To remove any crumbs and dust from beneath the keys, you can use a camera blower with a brush or cool air from a hair drier.

   ❖ **Note:**

   Avoid spraying cleaner directly on the display or the keyboard.

### Cleaning your computer display

1. Gently wipe the display with a dry, soft lint-free cloth. If you see a scratchlike mark on your display, it might be a stain transferred from the keyboard when the cover was pressed from the outside.
2. Wipe or dust the stain gently with a soft, dry cloth.
3. If the stain remains, moisten a soft, lint-free cloth with water or a 50-50 mixture of isopropyl alcohol and water that does not contain impurities.
4. Wring out as much of the liquid as you can.
5. Wipe the display again; do not let any liquid drip into the computer.
6. Be sure to dry the display before closing it.

## Accessibility and comfort

As your computer enables you to work in so many places, it is important that you remain attentive to good posture, good lighting, and proper seating. By keeping these considerations in mind, you can improve performance and achieve greater comfort. Lenovo is committed to providing the latest information and technology to our customers with disabilities.

## Ergonomic information

Working in the virtual office may mean adapting to frequent changes in your environment. Following some simple rules will make things easier and bring you the maximum benefits of your computer. Keeping in mind such basics as good lighting and proper seating, for example, can help you improve your performance and achieve greater comfort.

**Note:**

This example shows someone in a conventional setting. Even if you work in a casual, less conventional setting, many of the tips in this section still apply. Develop good habits, and they will serve you well.

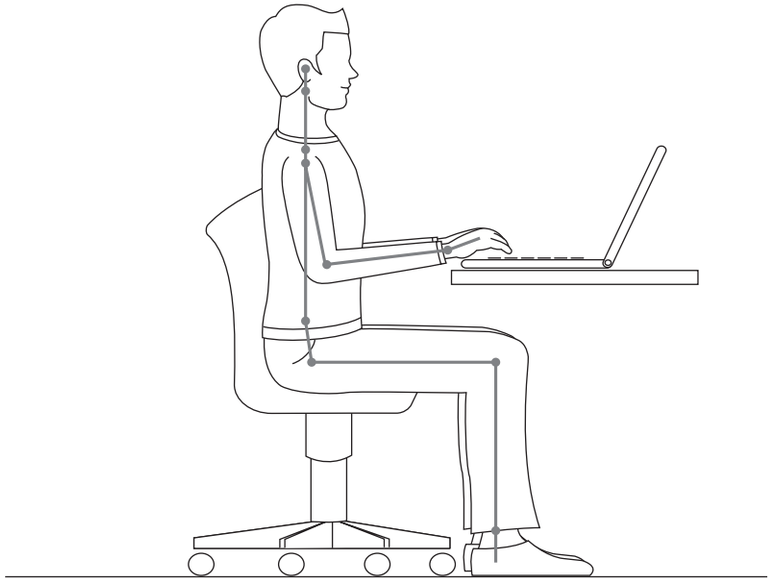

**General Posture:** Below are some general recommendations for assuming a healthy working posture. It is best to periodically make minor modifications in your working posture to deter the onset of discomfort caused by long periods of working in the same position. Frequent, short breaks from your work will also help to prevent any minor discomfort associated with your working posture.

**Display:** Position the display to maintain a comfortable viewing distance of 510-760 mm (20-30 inches). Avoid glare or reflections on the display from overhead lighting or outside sources of light. Keep the display screen clean and set the brightness to levels that enable you to see the screen clearly. Press **Fn + ↑ / ↓** to adjust display brightness.

**Head Position:** Keep your head and neck in a comfortable and neutral (vertical, or upright) position.

**Chair:** Use a chair that gives you good back support and seat height adjustment. Use chair adjustments to best suit your desired posture.

**Arm and Hand Position:** If available, utilize chair arm rests or an area on your working surface to provide weight support for your arms. Keep your forearms, wrists, and hands in a relaxed and neutral (horizontal) position. Type with a soft touch without pounding the keys.

**Leg Position:** Keep your thighs parallel to the floor and your feet flat on the floor or on a footrest.

### What if you are traveling?

It may not be possible to observe the best ergonomic practices when you are using your computer while on the move or in a casual setting. Regardless of the setting, try to observe as many of the tips as possible. Sitting properly and using adequate lighting, for example, will help you maintain desirable levels of comfort and performance.

### Questions about vision?

Your computer's visual display screen is designed to meet the highest standards and to provide you with clear, crisp images and large, bright displays that are easy to see, yet easy on the eyes. Of course, any concentrated and sustained visual activity can be tiring. If you have questions on eye fatigue or visual discomfort, consult a vision care specialist for advice.

## Maintenance

An important part of owning your computer is maintenance. With proper care, you can avoid common problems. The following sections provide information that can help you to keep your computer running smoothly.

## General tips for maintenance

1. Check the capacity of your hard disk drive from time to time. If the hard disk drive gets too full, Windows will slow down and might produce errors.
2. Empty your recycle bin on a regular basis.
3. Use Diskeeper Lite or the Microsoft Disk Defragmenter on your hard disk drive on a regular basis to improve data seek and read time.

- To free up disk space, uninstall unused application programs.

  **Note:**
  You might also want to look for application program duplication or overlapping versions.
- Clean out your Inbox, Sent, and Trash folders from your e-mail client program.
- At least once a week, make a point to back up your data. If critical data is present, it is a good idea to perform a daily backup. Lenovo has many backup options available for your computer. CD-RW drives and CD-RW/DVD drives are available for most computers and are easily installed.
- Use or schedule System Restore to take a system snapshot periodically.

  **Note:**
  Always take a system snapshot before installing new drivers, updating software, or installing new software.
- Update device drivers and BIOS when needed.

- Profile your machine at http://consumersupport.lenovo.com to keep up to date with current drivers and revisions.
- Keep up to date on device drivers on other non-Lenovo hardware. You might want to read the device driver information release notes prior to updating for compatibility or known issues.
- Keep a log book. Entries might include major hardware or software changes, driver updates, minor issues you have experienced and how you resolved them.
- If you ever need to run a recovery operation on your computer to return the contents of the hard disk to the factory-installed state, the following tips might help along the way:
    - Remove all external devices such as the printer, keyboard, and so on.
    - Make sure that the battery is charged and that you have the AC power adapter connected.
    - Boot into the BIOS and load the default settings.
    - Turn off the computer and start the recovery process.
    - If your computer uses discs as the recovery media, do not remove the disc from the drive until you are prompted to do so.
- If required, you can find your country's Customer Support Center at the following Web address: http://consumersupport.lenovo.com.
  When calling the Customer Support Center, please make sure you have your machine type, model, and serial number available and the computer is in front of you. Also, if the machine is producing error codes, it is helpful to have the error screen on or the message written down.

Device drivers are programs that contain instructions for the operating system about how to operate or “drive” a certain piece of hardware. Each

hardware component on your computer has its own specific driver. If you add a new component, the operating system needs to be instructed on how to operate that piece of hardware. After you install the driver, the operating system can recognize the hardware component and understand how to use it.

❖ **Note:**

Due to the fact that drivers are programs, like any other file on your computer, they are susceptible to corruption and might not perform properly if corruption occurs.

# Appendix A. Lenovo limited warranty

This Lenovo limited warranty applies only to Lenovo branded hardware products you purchased for your own use and not for resale.
This Lenovo limited warranty is available in other languages at www.lenovo.com/warranty.

## What this warranty covers

Lenovo warrants that each hardware product that you purchase is free from defects in materials and workmanship under normal use during the warranty period. The warranty period for the product starts on the original date of purchase specified on your sales receipt or invoice unless Lenovo informs you otherwise in writing. The warranty period and type of warranty service that apply to your product are designated below under the section titled **"Warranty Information."**

**THIS WARRANTY IS YOUR EXCLUSIVE WARRANTY AND REPLACES ALL OTHER WARRANTIES OR CONDITIONS, EXPRESS OR IMPLIED, INCLUDING, BUT NOT LIMITED TO, THE IMPLIED WARRANTIES OR CONDITIONS OF MERCHANTABILITY AND FITNESS FOR A PARTICULAR PURPOSE. SOME STATES OR JURISDICTIONS DO NOT ALLOW THE EXCLUSION OF EXPRESS OR IMPLIED WARRANTIES, SO THE ABOVE EXCLUSION MAY NOT APPLY TO YOU. IN THAT EVENT, SUCH WARRANTIES APPLY ONLY TO THE EXTENT REQUIRED BY LAW AND ARE LIMITED IN DURATION TO THE WARRANTY PERIOD. NO WARRANTIES APPLY AFTER THAT PERIOD. SOME STATES OR JURISDICTIONS DO NOT ALLOW LIMITATIONS ON HOW LONG AN IMPLIED WARRANTY LASTS, SO THE ABOVE LIMITATION ON DURATION MAY NOT APPLY TO YOU.**

## How to obtain warranty service

If the product does not function as warranted during the warranty period, you may obtain warranty service by contacting Lenovo or an approved service provider. Each of them is referred to as a "Service Provider." A list of Service Providers and their telephone numbers is available at www.lenovo.com/support/phone.

Warranty service may not be available in all locations and may differ from location to location. Charges may apply outside a Service Provider's normal service area. Contact a local Service Provider for location-specific information.

## What your Service Provider will do to correct problems

When you contact a Service Provider, you must follow the problem determination and resolution procedures specified.

Your Service Provider will attempt to diagnose and resolve your problem over the telephone, e-mail or through remote assistance. Your Service Provider may direct you to download and install designated software updates.

Some problems can be resolved with a replacement part that you can install yourself called a "Customer Replaceable Unit" or "CRU." If so, your Service Provider will ship the CRU to you for you to install.

If your problem cannot be resolved over the telephone or remotely, through your application of software updates or the installation of a CRU by you, your Service Provider will arrange for service under the type of

warranty service designated for the product under the section titled **"Warranty Information."**

If your Service Provider determines that it is unable to repair your product, your Service Provider will replace it with one that is at least functionally equivalent.

If your Service Provider determines that it is unable to either repair or replace your product, your sole remedy is to return the product to your place of purchase or to Lenovo for a refund of your purchase price.

## Replacement of a product or part

When the warranty service involves the replacement of a product or part, the replaced product or part becomes Lenovo's property and the replacement product or part becomes your property. Only unaltered Lenovo products and parts are eligible for replacement. The replacement product or part provided by Lenovo may not be new, but it will be in good working order and at least functionally equivalent to the original product or part. The replacement product or part shall be warranted for the balance of the period remaining on the original product.

Before your Service Provider replaces a product or part, you agree to:

1. remove all features, parts, options, alterations, and attachments not under warranty service;
2. ensure that the product or part is free of any legal obligations or restrictions that prevent its replacement; and
3. obtain authorization from the owner to have your Service Provider service a product or part if you do not own it.

## Your additional responsibilities

Where applicable, before service is provided, you agree to:

1. follow the service request procedures that your Service Provider specifies;
2. backup or secure all programs and data contained in the product;
3. provide your Service Provider with all system keys or passwords and sufficient, free, and safe access to your facilities to perform service; and
4. ensure that all information about identified or identifiable individuals ("Personal Data") is deleted from the product or that, with respect to any Personal Data that you did not delete, you are in compliance with all applicable laws.

## Use of personal information

If you obtain service under this warranty, Lenovo will store, use and process information about your warranty service and your contact information, including name, phone numbers, address, and e-mail address. Lenovo will use this information to perform service under this warranty and to improve our business relationship with you. We may contact you to inquire about your satisfaction regarding our warranty service or to notify you about any product recalls or safety issues. In accomplishing these purposes, we may transfer your information to any country where we do business and may provide it to entities acting on our behalf. We may also disclose it where required by law.

## What this warranty does not cover

This warranty does not cover the following:

- uninterrupted or error-free operation of a product;
- loss of, or damage to, your data;
- any software programs, whether provided with the product or installed subsequently;
- failure or damage resulting from misuse, accident, modification, unsuitable physical or operating environment, natural disasters, power surges, or improper maintenance by you;
- damage caused by a non-authorized service provider;
- failure of, or damage caused by, any third party products, including those that Lenovo may provide or integrate into the Lenovo product at your request; and
- any technical or other support, such as assistance with "how-to" questions and those regarding product set-up and installation.

This warranty is voided by removal or alteration of identification labels on the product or its parts.

## Limitation of liability

Lenovo is responsible for loss or damage to your product only while it is: 1) in your Service Provider's possession; or 2) in transit in those cases where the Service Provider is responsible for the transportation.

Neither Lenovo nor your Service Provider is responsible for any of your data including confidential, proprietary, or personal data contained in a product. You should remove and/or backup all such information from the product prior to its service or return.

Circumstances may arise where, because of a default on Lenovo's part or other liability, you may be entitled to recover damages from Lenovo. In each such instance, regardless of the basis of your claim against Lenovo (including breach, negligence, misrepresentation, or other contract or tort claim), except and to the extent that liability cannot be waived or limited by applicable laws, Lenovo shall not be liable for more than the amount of actual direct damages suffered by you, up to the amount you paid for the product. This limit does not apply to damages for bodily injury (including death) and damage to real property or tangible personal property for which Lenovo is liable under law.

This limit also applies to Lenovo's suppliers, resellers, and your Service Provider. It is the maximum amount for which Lenovo, its suppliers, resellers, and your Service Provider are collectively responsible.

**UNDER NO CIRCUMSTANCES SHALL LENOVO, ITS SUPPLIERS, RESELLERS, OR SERVICE PROVIDERS BE LIABLE FOR ANY OF THE FOLLOWING EVEN IF INFORMED OF THEIR POSSIBILITY: 1) THIRD PARTY CLAIMS AGAINST YOU FOR DAMAGES; 2) LOSS OR DAMAGE TO YOUR DATA; OR 3) SPECIAL, INCIDENTAL, INDIRECT OR CONSEQUENTIAL DAMAGES, INCLUDING LOST PROFITS, BUSINESS REVENUE, GOODWILL OR ANTICIPATED SAVINGS. AS SOME STATES OR JURISDICTIONS DO NOT ALLOW THE EXCLUSION OR LIMITATION OF INCIDENTAL OR CONSEQUENTIAL DAMAGES, THE ABOVE LIMITATION OR EXCLUSION MAY NOT APPLY TO YOU.**

## Dispute resolution

If you acquired the product in **Cambodia, Indonesia, Philippines, Vietnam or Sri Lanka**, disputes arising out of or in connection with this warranty shall be finally settled by arbitration held in Singapore and this warranty shall be governed, construed and enforced in accordance with the laws of Singapore, without regard to conflict of laws. If you acquired the product in **India**, disputes arising out of or in connection with this warranty shall be finally settled by arbitration held in Bangalore, India. Arbitration in Singapore shall be held in accordance with the Arbitration Rules of Singapore International Arbitration Center ("SIAC Rules") then in effect. Arbitration in India shall be held in accordance with the laws of India then in effect. The arbitration award shall be final and binding on the parties without appeal. Any award shall be in writing and set forth the findings of fact and the conclusions of law. All arbitration proceedings, including all documents presented in such proceedings, shall be conducted in the English language, and the English language version of this warranty prevails over any other language version in such proceedings.

## Other rights

**THIS WARRANTY GIVES YOU SPECIFIC LEGAL RIGHTS AND YOU MAY HAVE OTHER RIGHTS WHICH VARY FROM STATE TO STATE OR JURISDICTION TO JURISDICTION. YOU MAY ALSO HAVE OTHER RIGHTS UNDER APPLICABLE LAW OR WRITTEN AGREEMENT WITH LENOVO. NOTHING IN THIS WARRANTY AFFECTS STATUTORY RIGHTS, INCLUDING RIGHTS OF CONSUMERS UNDER NATIONAL LEGISLATION GOVERNING THE SALE OF CONSUMER GOODS THAT CANNOT BE WAIVED OR LIMITED BY CONTRACT.**

## European Economic Area (EEA)

Customers in the EEA may contact Lenovo at the following address: EMEA Service Organisation, Lenovo (International) B.V., Floor 2, Einsteinova 21, 851 01, Bratislava, Slovakia. Service under this warranty for Lenovo hardware products purchased in EEA countries may be obtained in any EEA country in which the product has been announced and made available by Lenovo.

## Lenovo Turkey address

LENOVO TECHNOLOGY B.V.
TURKIYE ISTANBUL SUBESI
Beybi Giz Plaza, Dereboyu cad., Meydan Sok.,
No:28, Kat:10, Daire 35 Maslak
Posta Kodu: 34398

Tel : 3658900-99
Fax: 2902750

## Suplemento de Garantía para México

Este Suplemento se considera parte integrante de la Garantía Limitada de Lenovo y será efectivo única y exclusivamente para los productos distribuidos y comercializados dentro del Territorio de los Estados Unidos Mexicanos. En caso de conflicto, se aplicarán los términos de este Suplemento.

Todos los programas de software precargados en el equipo sólo tendrán una garantía de treinta (30) días por defectos de instalación desde la fecha de compra. Lenovo no es responsable de la información incluida en dichos programas de software y/o cualquier programa de software adicional instalado por Usted o instalado después de la compra del producto.

Los servicios no cubiertos por la garantía se cargarán al usuario final, previa obtención de una autorización.

En el caso de que se precise una reparación cubierta por la garantía, por favor, llame al Centro de soporte al cliente al 01-800-9253-6686, donde le dirigirán al Centro de servicio autorizado más cercano. Si no existiese ningún Centro de servicio autorizado en su ciudad, población o en un radio de 70 kilómetros de su ciudad o población, la garantía incluirá cualquier gasto de entrega razonable relacionado con el transporte del producto a su Centro de servicio autorizado más cercano. Por favor, llame al Centro de servicio autorizado más cercano para obtener las aprobaciones

necesarias o la información relacionada con el envío del producto y la dirección de envío.

Para obtener una lista de los Centros de servicio autorizados, por favor, visite: http://www.lenovo.com/mx/es/servicios

**Manufactured by:**
**China**
**Shanghai, China**
**No. 68 building, No. 199 Fenju Road,**
**Waigaoqiao Free Trade Zone,**
**Shanghai, P.R. China 200131**

**Marketed by:**
**Lenovo Mexico S de RL de CV**
**Av. Santa Fe 505, Piso 15**
**Col. Cruz Manca**
**Cuajimalpa, México, DF**
**CP 05349**
**Tel: 55-5000-8500**

## Warranty Information

| Product or machine type | Country or region of purchase | Warranty period | Type of warranty service |
|---|---|---|---|
| Notebook: 20020, 4189 | Taiwan | Parts and labor - 1 year<br>Battery pack - 1 year | 3, 4 |
| | India, China (Hong Kong S.A.R.), China (Macau S.A.R.) | | 1, 4 |
| | United States of America, Canada | | 1, 3 |
| | Indonesia, Malaysia, Singapore, Thailand, Philippines, Vietnam, South Africa, Australia, New Zealand, France, Mexico | | 1, 3 or 4 |
| | Russia, Ukraine, the Republic of Kazakhstan | Parts and labor - 2 years<br>Battery pack - 1 year | 4 |
| | Poland, Turkey | | 1, 3 or 4 |

If required, your Service Provider will provide repair or exchange service depending on the type of warranty service specified for your product and the available service. Scheduling of service will depend upon the time of your call, parts availability, and other factors.

A warranty period of three (3) years on parts and one (1) year on labor means that Lenovo will provide warranty service without charge for:

a. parts and labor during the first year of the warranty period (or a longer period as required by law); and
b. parts only, on an exchange basis, in the second and third years of the warranty period. Your Service Provider will charge you for any labor provided in performance of the repair or replacement in the second and third years of the warranty period.

## Types of warranty service

### ❶ Customer Replaceable Unit ("CRU") service

Under CRU service, your Service Provider will ship CRUs to you for installation by you. CRU information and replacement instructions are shipped with your product and are available from Lenovo at any time upon request. CRUs that are easily installed by you are called self-service CRUs, while optional-service CRUs may require some technical skill and tools. Installation of self-service CRUs is your responsibility. You may request that a Service Provider install optional-service CRUs under one of the other types of warranty service designated for your product. An optional service offering may be available for purchase from Lenovo to have Lenovo install self-service CRUs for you. You may find a list of CRUs and their designation in the publication that ships with your product or at www.lenovo.com/CRUs. The requirement to return a defective CRU, if any, will be specified in the materials shipped with a replacement CRU. When return is required: 1) return instructions, a prepaid return shipping label, and a container will be included with the replacement CRU; and 2)

you may be charged for the replacement CRU if your Service Provider does not receive the defective CRU within thirty (30) days of your receipt of the replacement.

### ❷ On-site service

Under on-site service, your Service Provider will either repair or exchange the product at your location. You must provide a suitable working area to allow disassembly and reassembly of the Lenovo product. For some products, certain repairs may require your Service Provider to send the product to a designated service center.

### ❸ Courier or depot service

Under courier or depot service, your product will be repaired or exchanged at a designated service center, with shipping arranged by your Service Provider. You are responsible for disconnecting the product. A shipping container will be provided to you for you to return your product to a designated service center. A courier will pick up your product and deliver it to the designated service center. Following its repair or exchange, the service center will arrange the return delivery of the product to you.

### ❹ Customer carry-in or mail-in service

Under customer carry-in or mail-in service, your product will be repaired or exchanged at a designated service center, with delivery or shipping arranged by you. You are responsible to deliver or mail, as your Service Provider specifies, (prepaid by you unless specified otherwise) the product, suitably packaged to a designated location. After the product has been repaired or exchanged, it will be made available for your collection. Failure to collect the product may result in your Service Provider disposing

of the product as it sees fit. For mail-in service, the product will be returned to you at Lenovo's expense, unless your Service Provider specifies otherwise.

### ❺ Product exchange service

Under product exchange service, Lenovo will ship a replacement product to your location. You are responsible for its installation and verification of its operation. The replacement product becomes your property in exchange for the failed product, which becomes the property of Lenovo. You must pack the failed product in the shipping carton used to ship the replacement product and return it to Lenovo. Transportation charges, both ways, are paid by Lenovo. Failure to use the carton in which the replacement product was received may result in your responsibility for damage to the failed product during shipment. You may be charged for the replacement product if Lenovo does not receive the failed product within thirty (30) days of your receipt of the replacement product.

## Lenovo warranty service telephone numbers

### Warranty service telephone numbers

The phone numbers provided below are correct as of the time of printing and are subject to change without notice. For the latest warranty service contact telephone number in a country or region, please contact Lenovo or the reseller in your country or region.

| | |
|---|---|
| ▪ Singapore | 800 6012 047 |
| ▪ Malaysia | 1800 18 2388 |
| ▪ Thailand | 1800 06 0087 |
| ▪ Indonesia | 001 803 0601 2003 |
| ▪ Philippines | 1800 111 00724 |
| ▪ Vietnam | 1800 1528 |
| ▪ India Toll free | 1800 113324 |
| Alternate No. | 011-26388288 |
| SMS | 9900173324 |
| ▪ P.R.China | 400-810-8888 |
| ▪ Hong Kong | (852) 2516-3919 |
| ▪ Taiwan | (886) 0800-000-702 |
| ▪ Macau | 0800-689 |
| ▪ United States | 1-877-453-6686 |
| ▪ Canada | 1-877-453-6686 |
| ▪ Mexico | 01-800-92536686 |
| ▪ France | 0826-536-686 |

| | |
|---|---|
| ▪ South Africa | 0861-536-686 |
| ▪ Australia | 1300 557 073 |
| ▪ New Zealand | 0800 446 833 |
| ▪ Russia Toll free | 8-800-700-7888 |
| Alternate No. | +7-(495) 662-7888 |
| ▪ Ukraine | +38 044 458-38-70 |
| ▪ the Republic of Kazakhstan | +7 (727) 2971150 |
| | +7 (727) 2971160 |
| ▪ Poland | 0800-702-062 |
| ▪ Turkey | 0811-267-7777 |

Additionally, you can find support information, and updates, including service phone numbers for unlisted countries on the Lenovo Web site located at: http://consumersupport.lenovo.com.

# Appendix B. Customer Replaceable Units (CRUs)

Customer Replaceable Units (CRUs) are computer parts that can be upgraded or replaced by the customer. There are two types of CRUs: *internal* and *external*. External CRUs are easy to install, whereas internal CRUs require some technical skills and in some cases might require tools such as a screwdriver. However, both internal and external CRUs are safe for removal by the customer.

Customers are responsible for replacing all external CRUs. Internal CRUs can be removed and installed by customers or by a Lenovo service technician during the warranty period.

Your computer contains the following types of external CRUs:

- **External CRUs (pluggable):** These CRUs unplug from the computer. Examples of these types of CRUs include the AC adapter and power cord.
- **External CRUs with latches:** These CRUs include a latch to help you remove and replace the part. Examples of these types of CRUs include the notebook main battery, an optical drive, and an extended battery.

Your computer contains the following types of internal CRUs:

- **Internal CRUs (located behind an access panel):** These CRUs are isolated parts within the computer that are concealed by an access panel that is typically secured by either one or two screws. Once the access panel is removed, only the specific CRU is visible. Examples of these types of CRUs include memory modules and hard disk drives.
- **Internal CRUs (located within the product):** These CRUs are accessible only by opening the computer's outer case. Examples of these CRUs include PCI Express Mini Cards and the integrated keyboard.

# Appendix C. Specifications

## Specifications

| | |
|---|---|
| **Size** | ▪ Approximate 340 mm × 232 mm × 22.4 - 34.8 mm |
| **Environment** | ▪ Temperature<br>– Operating with no optical disc in the drive: 5° to 35°C (41° to 95°F)<br>– Operating with an optical disc in the drive: 10° to 35°C (50° to 95°F)<br>– Storage: 0° to 50°C (32° to 122°F)<br>❖ **Note:**<br>When you charge the battery pack, its temperature is between 0°C and 60°C (32° - 140°F).<br>▪ Relative humidity:<br>– Operating with no optical disc in the drive: 8% to 95%<br>– Operating with an optical disc in the drive: 8% to 80% |

| | |
|---|---|
| **Power source (AC adapter)** | ▪ Input rating of the AC adapter: 100-240 V ac, 50 to 60 Hz<br>▪ 65 W (with integrated graphics card)/90 W (with discrete graphics card)<br><br>❖ **Note:**<br>For models with discrete graphics card, the supplied 90W AC adapter with the unit is recommended. Otherwise, it will cause AC adapter overheat or machine malfunction. |
| **Battery pack** | ▪ Lithium-ion (Li-Ion) battery pack<br>– Nominal voltage: 11.1 V (6 cells)<br>– Capacity: 56 - 57Wh |

# Appendix D. Notices

## Notices

Lenovo may not offer the products, services, or features discussed in this document in all countries. Consult your local Lenovo representative for information on the products and services currently available in your area. Any reference to a Lenovo product, program, or service is not intended to state or imply that only that Lenovo product, program, or service may be used. Any functionally equivalent product, program, or service that does not infringe any Lenovo intellectual property right may be used instead. However, it is the user's responsibility to evaluate and verify the operation of any other product, program, or service.

Lenovo may have patents or pending patent applications covering subject matter described in this document. The furnishing of this document does not give you any license to these patents. You can send license inquiries, in writing, to:

*Lenovo (United States), Inc.*
*1009 Think Place - Building One*
*Morrisville, NC 27560*
*U.S.A.*
*Attention: Lenovo Director of Licensing*

LENOVO PROVIDES THIS PUBLICATION "AS IS" WITHOUT WARRANTY OF ANY KIND, EITHER EXPRESS OR IMPLIED, INCLUDING, BUT NOT LIMITED TO, THE IMPLIED WARRANTIES OF NON-INFRINGEMENT, MERCHANTABILITY OR FITNESS FOR A PARTICULAR PURPOSE. Some jurisdictions do not allow disclaimer of express or implied warranties in certain transactions, therefore, this statement may not apply to you.

This information could include technical inaccuracies or typographical errors. Changes are periodically made to the information herein; these changes will be incorporated in new editions of the publication. Lenovo may make improvements and/or changes in the product(s) and/or the program(s) described in this publication at any time without notice.

The products described in this document are not intended for use in implantation or other life support applications where malfunction may result in injury or death to persons. The information contained in this document does not affect or change Lenovo product specifications or warranties. Nothing in this document shall operate as an express or implied license or indemnity under the intellectual property rights of Lenovo or third parties. All information contained in this document was obtained in specific environments and is presented as an illustration. The result obtained in other operating environments may vary.

Lenovo may use or distribute any of the information you supply in any way it believes appropriate without incurring any obligation to you.

Any references in this publication to non-Lenovo Web sites are provided for convenience only and do not in any manner serve as an endorsement of those Web sites. The materials at those Web sites are not part of the materials for this Lenovo product, and use of those Web sites is at your own risk.

Any performance data contained herein was determined in a controlled environment. Therefore, the result obtained in other operating environments may vary significantly. Some measurements may have been made on development-level systems and there is no guarantee that these measurements will be the same on generally available systems. Furthermore, some measurements may have been estimated through

extrapolation. Actual results may vary. Users of this document should verify the applicable data for their specific environment.

The software interface and hardware configuration described in all the manuals included with your computer may not match the actual configuration of the computer you purchased.

## Export classification notice

This product is subject to the Untied States Export Administration Regulations (EAR) and has an Export Classification Control Number (ECCN) of 4A994.b. It can be re-exported except to any of the embargoed countries in the EAR E1 country list.

## Television output notice

The following notice applies to models that have the factory-installed television-output feature.

This product incorporates copyright protection technology that is protected by U.S. patents and other intellectual property rights. Use of this copyright protection technology must be authorized by Macrovision, and is intended for home and other limited viewing uses only unless otherwise authorized by Macrovision. Reverse engineering or disassembly is prohibited.

# Wireless related information

## Wireless interoperability

Wireless LAN PCI Express Mini Card is designed to be interoperable with any wireless LAN product that is based on Direct Sequence Spread Spectrum (DSSS), Complementary Code Keying (CCK), and/or Orthogonal Frequency Division Multiplexing (OFDM) radio technology, and is compliant to:

- The IEEE 802.11a/b/g/n standard on wireless LANs, as defined and approved by the Institute of Electrical and Electronics Engineers.
- The Wireless Fidelity (Wi-Fi) certification as defined by the Wi-Fi Alliance.

*Bluetooth* Daughter Card is designed to be interoperable with any *Bluetooth* product that is compliant to *Bluetooth* Specification 2.0 + EDR as defined by the Bluetooth SIG. Following profiles are supported by *Bluetooth* Daughter Card:

- Generic Access
- Service Discovery
- Serial Port
- Dial-up Networking
- FAX
- LAN Access using PPP
- Personal Area Network
- Generic Object Exchange
- Generic Object Push

- File Transfer
- Synchronization
- Audio Gateway
- Headset
- Printer
- Human Interface Devices (Keyboard/Mouse)
- Basic Image
- Handsfree
- AV

## Usage environment and your health

Wireless LAN PCI Express Mini Card and *Bluetooth* Daughter Card emit radio frequency electromagnetic energy like other radio devices. However, the level of energy emitted is far much less than the electromagnetic energy emitted by wireless devices like for example mobile phones.

Due to the fact that wireless LAN PCI Express Mini Card and *Bluetooth* Daughter Card operate within the guidelines found in radio frequency safety standards and recommendations, Lenovo believes the integrated wireless cards are safe for use by consumers. These standards and recommendations reflect the consensus of the scientific community and result from deliberations of panels and committees of scientists who continually review and interpret the extensive research literature.

In some situation or environment, the use of wireless LAN PCI Express Mini Card or *Bluetooth* Daughter Card may be restricted by the proprietor of the building or responsible representatives of the organization. These situations may for example include:

- Using the integrated wireless cards on board of airplanes, or in hospitals
- In any other environment where the risk of interference to other devices or services is perceived or identified as harmful.

If you are uncertain of the policy that applies on the use of wireless devices in a specific organization (e.g., airport or hospital), you are encouraged to ask for authorization to use wireless LAN PCI Express Mini Card or *Bluetooth* Daughter Card prior to turning on the computer.

## Electronic emissions notices

The following information refers to Lenovo IdeaPad Y450, machine type 20020, 4189.

### Federal Communications Commission (FCC) statement

This equipment has been tested and found to comply with the limits for a Class B digital device, pursuant to Part 15 of the FCC rules. These limits are designed to provide reasonable protection against harmful interference in a residential installation. This equipment generates, used, and can radiate radio frequency energy and, if not installed and used in accordance with the instructions, may cause harmful interference to radio communications. However, there is no guarantee the interference will not occur in a particular installation. If this equipment does cause harmful interference to radio or television reception, which can be determined by turning the equipment off and on, the user is encouraged to try to correct the interference by one or more of the following measures:

- Reorient or relocate the receiving antenna.
- Increase the separation between the equipment and receiver.
- Connect the equipment into an outlet on a circuit different from that to which the receiver is connected.
- Consult an authorized dealer or service representative for help.

Properly shielded and grounded cables and connectors must be used in order to meet FCC emission limits. Proper cables and connectors are available from Lenovo authorized dealers. Lenovo is not responsible for any radio or television interference caused by using other than

recommended cables or connectors or by unauthorized changes or modifications to this equipment. Unauthorized changes or modifications could void the user's authority to operate the equipment.

This device complies with Part 15 of the FCC Rules. Operation is subject to the following two conditions: (1) this device may not cause harmful interference, and (2) this device must accept any interference received, including interference that may cause undesired operation.

Responsible party:
Lenovo (United States) Incorporated
1009 Think Place - Building One
Morrisville, NC 27560
U.S.A.
Telephone: (919) 294-5900

## Industry Canada Class B emission compliance statement

This Class B digital apparatus complies with Canadian ICES-003.

## Avis de conformité à la réglementation d'Industrie Canada

Cet appareil numérique de la classe B est conforme à la norme NMB-003 du Canada.

## German Class B compliance statement

Deutschsprachiger EU Hinweis:

**Hinweis für Geräte der Klasse B EU-Richtlinie zur Elektromagnetischen Verträglichkeit**
Dieses Produkt entspricht den Schutzanforderungen der EU-Richtlinie 2004/108/EG (früher 89/336/EWG) zur Angleichung der Rechtsvorschriften über die elektromagnetische Verträglichkeit in den EU-Mitgliedsstaaten und hält die Grenzwerte der EN 55022 Klasse B ein.

Um dieses sicherzustellen, sind die Geräte wie in den Handbüchern beschrieben zu installieren und zu betreiben. Des Weiteren dürfen auch nur von der Lenovo empfohlene Kabel angeschlossen werden. Lenovo übernimmt keine Verantwortung für die Einhaltung der Schutzanforderungen, wenn das Produkt ohne Zustimmung der Lenovo verändert bzw. wenn Erweiterungskomponenten von Fremdherstellern ohne Empfehlung der Lenovo gesteckt/eingebaut werden.

**Deutschland:**

**Einhaltung des Gesetzes über die elektromagnetische Verträglichkeit von Betriebsmittein**
Dieses Produkt entspricht dem “Gesetz über die elektromagnetische Verträglichkeit von Betriebsmitteln” EMVG (früher “Gesetz über die elektromagnetische Verträglichkeit von Geräten”). Dies ist die Umsetzung der EU-Richtlinie 2004/108/EG (früher 89/336/EWG) in der Bundesrepublik Deutschland.

**Zulassungsbescheinigung laut dem Deutschen Gesetz über die elektromagnetische Verträglichkeit von Betriebsmitteln, EMVG vom 20. Juli 2007 (früher Gesetz über die elektromagnetische Verträglichkeit von Geräten), bzw. der EMV EG Richtlinie 2004/108/EC (früher 89/336/EWG), für Geräte der Klasse B.**

Dieses Gerät ist berechtigt, in Übereinstimmung mit dem Deutschen EMVG das EG-Konformitätszeichen - CE - zu führen. Verantwortlich für die Konformitätserklärung nach Paragraf 5 des EMVG ist die Lenovo (Deutschland) GmbH, Gropiusplatz 10, D-70563 Stuttgart.

Informationen in Hinsicht EMVG Paragraf 4 Abs. (1) 4:
**Das Gerät erfüllt die Schutzanforderungen nach EN 55024 und EN 55022 Klasse B.**

## European Union compliance statement Class B compliance

**European Union - Compliance to the Electromagnetic Compatibility Directive**

**This product is in conformity with the protection requirements of EU Council Directive 2004/108/EC on the approximation of the laws of the Member States relating to electromagnetic compatibility. Lenovo cannot accept responsibility for any failure to satisfy the protection requirements resulting from a non-recommended modification of the product, including the installation of option cards from other manufacturers.**

This product has been tested and found to comply with the limits for Class B Information Technology Equipment according to European Standard EN 55022. The limits for Class B equipment were derived for typical residential environments to provide reasonable protection against interference with licensed communication devices.

Properly shielded and grounded cables and connectors must be used in order to reduce the potential for causing interference to radio and TV communications and to other electrical or electronic equipment. Such cables and connectors are available from Lenovo authorized dealers. Lenovo cannot accept responsibility for any interference caused by using other than recommended cables and connectors.

## Lenovo Product Service Information

台灣Lenovo產品服務資訊如下:
荷蘭商聯想股份有限公司台灣分公司
台北市信義區信義路五段七號十九樓之一
服務電話:0800-000-700

## Japan compliance statement for power line harmonics

A statement of compliance to the IEC 61000-3-2 harmonics standard is required for all products connecting to the power mains and rated less than 20A per phase.

日本の定格電流が 20A/相 以下の機器に対する高調波電流規制

高調波電流規格 JIS C 61000-3-2 適合品

### Korea Class B

이 기기는 가정용으로 전자파적합등록을 한 기기로서 주거 지역에서는 물론 모든 지역에서 사용할 수 있 습니다.

## WEEE and recycling statements

### General recycling statement

Lenovo encourages owners of information technology (IT) equipment to responsibly recycle their equipment when it is no longer needed. Lenovo offers a variety of programs and services to assist equipment owners in recycling their IT products. Information on product recycling offerings can be found on Lenovo's Internet site at
http://www.lenovo.com/lenovo/environment/recycling/

## Turkish statement of compliance

The Lenovo product meets the requirements of the Republic of Turkey Directive on the Restriction of the Use of Certain Hazardous Substances in Electrical and Electronic Equipment (EEE).

### Türkiye EEE Yönetmeliğine Uygunluk Beyanı

Bu Lenovo ürünü, T.C. Çevre ve Orman Bakanlığı'nın "Elektrik ve Elektronik Eşyalarda Bazı Zararlı Maddelerin Kullanımının Sınırlandırılmasına Dair Yönetmelik (EEE)" direktiflerine uygundur.

## EU WEEE statements

The Waste Electrical and Electronic Equipment (WEEE) mark applies only to countries within the European Union (EU) and Norway. Appliances are labeled in accordance with European Directive 2002/96/EC concerning waste electrical and electronic equipment (WEEE). The Directive determines the framework for the return and recycling of used appliances as applicable throughout the European Union. This label is applied to various products to indicate that the product is not to be thrown away, but rather reclaimed upon end of life per this Directive.

Users of electrical and electronic equipment (EEE) with the WEEE marking per Annex IV of the WEEE Directive must not dispose of end of life EEE as unsorted municipal waste, but use the collection framework available to

them for the return, recycle, recovery of WEEE and minimize any potential effects of EEE on the environment and human health due to the presence of hazardous substances. For additional WEEE information go to: http://www.lenovo.com/lenovo/environment/recycling/.

## Japan recycling statements

### Collecting and recycling a disused Lenovo computer or monitor

If you are a company employee and need to dispose of a Lenovo computer or monitor that is the property of the company, you must do so in accordance with the Law for Promotion of Effective Utilization of Resources. Computers and monitors are categorized as industrial waste and should be properly disposed of by an industrial waste disposal contractor certified by a local government. In accordance with the Law for Promotion of Effective Utilization of Resources, Lenovo Japan provides, through its PC collecting and recycling services, for the collecting, reuse, and recycling of disused computers and monitors. For details, visit the Lenovo Web site at
www.ibm.com/jp/pc/service/recycle/pcrecycle
http://www.ibm.com/jp/pc/service/recycle/pcrecycle

Pursuant to the Law for Promotion of Effective Utilization of Resources, the collecting and recycling of home-used computers and monitors by the manufacturer was begun on October 1, 2003. This service is provided free

of charge for home-used computers sold after October 1, 2003. For details, visit the Lenovo Web site at
www.ibm.com/jp/pc/service/recycle/personal
http://www.ibm.com/jp/pc/service/recycle/personal

## Disposing of a Lenovo computer components

Some Lenovo computer products sold in Japan may have components that contain heavy metals or other environmental sensitive substances. To properly dispose of disused components, such as a printed circuit board or drive, use the methods described above for collecting and recycling a disused computer or monitor.

## Disposing a disused battery pack from Lenovo notebook computers

Your Lenovo notebook computer has a lithium ion battery pack or a nickel metal hydride battery pack. If you are a company employee who uses a Lenovo notebook computer and need to dispose of a battery pack, contact the proper person in Lenovo sales, service, or marketing, and follow that person's instructions. You also can refer to the instructions at
www.ibm.com/jp/pc/environment/recycle/battery
http://www.ibm.com/jp/pc/environment/recycle/battery

If you use a Lenovo notebook computer at home and need to dispose of a battery pack, you must comply with local ordinances and regulations. You also can refer to the instructions at
www.ibm.com/jp/pc/environment/recycle/battery
http://www.ibm.com/jp/pc/environment/recycle/battery

## Notice for users in the U.S.A.

California Perchlorate Information:

Products containing CR (manganese dioxide) lithium coin cell batteries may contain perchlorate.

Perchlorate Material — special handling may apply.

See http://www.dtsc.ca.gov/hazardouswaste/perchlorate.

## Notice on deleting data from your hard disk

As computers spread into every corner of life, they process more and more information. The data on your computer, some of it sensitive, is stored on a storage device called the hard disk. Before you dispose of, sell, or hand over your computer, you need to delete that data.

Handing your computer over to someone else without deleting the loaded software, such as operating systems and application software, may even violate license agreements. You are advised to check the terms and conditions of those agreements.

Deleting the data from the hard disk is not easy.

There are methods that seem to delete the data:

- Move the data to the recycle bin, and then choose the Empty recycle bin command.
- Use the Delete command.
- Format your hard disk, using the software for initializing it.

- Using the preinstalled recovery program, bring the hard disk back to factory-ship state.

These operations, however, only change the file allocation of the data; they do not delete the data itself. In other words, the data retrieval processing is disabled under an operating system such as Windows. The data is still there, even though it seems to be lost. Thus, it is sometimes possible to read the data by use of special software for data recovery. There is a risk that people of bad faith may read and misuse the critical data on hard disks for unexpected purposes.

To prevent the leakage of data, it becomes very important that you take responsibility for deleting all the data from the hard disk when you dispose of, sell, or hand over your computer. You can destroy the data physically by smashing the hard disk with a hammer, or magnetically by means of strong magnetic power, thus making the data unreadable. But we recommend that you make use of the software (payware) or service (pay service) specifically developed for the purpose.

## Trademarks

Lenovo, Lenovo logo, IdeaPad, VeriFace and OneKey are either registered trademarks or trademarks of Lenovo in the United States and/or other countries.

Microsoft, Windows and Windows Vista are either registered trademarks or trademarks of Microsoft Corporation in the United States, other countries, or both.

All other trademarks and registered trademarks are trademarks or registered trademarks of their respective holders. In this manual, ™ and ® marks are not specified.

# Index


## A

AC adapter
- Jack ..... 6
- Using ..... 31

## B

Battery
- charging ..... 33

*Bluetooth*
- Connecting ..... 46
- Interoperability ..... 119
- Switch ..... 16
- Usage environment ..... 121

## C

Camera ..... 16, 22
Caring your computer ..... 82
Cleaning
- Computer cover ..... 88
- Computer display ..... 90
- Computer keyboard ..... 89

Customer Replaceable Unit (CRU) parts list ..... 113
Customer Support Center ..... 59

## D

Display
- Cleaning ..... 90

Drivers ..... 31

## E

eSATA/USB combo port ..... 6, 37
ExpressCard/34 slot ..... 6, 39

## F

FCC statement ..... 122
Frequently asked questions ..... 47
Function key combinations ..... 15

## H

Hard disk drive
- problems ..... 56

HDMI port ..... 4, 42
Headphone jack (S/PDIF) ..... 8, 43
Help
- Customer Support Center ..... 59
- Help and service ..... 58
- On the Web ..... 59

Hibernation mode problems ..... 52

## I

IEEE 1394 connector ..... 6, 38
Integrated camera ..... 2
Internet ..... 23

## K

Keyboard
- Cleaning ..... 89
- Problems..... 51
- Using ..... 14

## L

Lenovo limited warranty..... 97

## M

Maintenance..... 93
Memory card slot..... 8, 20
Microphone
- Built-in..... 2
- External ..... 8, 45

Mobile Broadband ..... 25

## N

Notice
- Electronic emissions..... 122
- EU environmental..... 126
- For US users ..... 132

Numeric keypad ..... 14

## O

OneKey Rescue System button ..... 2, 19

## P

Password
- Problems..... 51
- Using ..... 30

Power button..... 2
Problems
- Battery ..... 55
- Computer screen..... 53
- Display ..... 49
- Hard disk drive..... 56
- Hibernation mode..... 52
- Keyboard ..... 51
- Password ..... 51
- Sleep mode ..... 52

Sound ..... 55
Startup..... 56

## R

RJ-45 port ..... 4, 23

## S

Security ..... 29
Security keyhole ..... 4
Speaker..... 2
Specifications ..... 114
Storage media
handling..... 86
System status indicators..... 2

## T

Touch inductive panel..... 2, 17
touchpad ..... 11
Trademarks..... 134
Troubleshooting ..... 49

## U

USB port..... 4, 6, 35

## V

VeriFace..... 30
VGA port..... 4, 41
Volume button..... 16

## W

Warranty Information ..... 107
Web
Help..... 59
Wireless LAN
Antennas ..... 2
Connecting..... 24
Interoperability ..... 119
Switches ..... 16
Usage environment ..... 121

lenovo

**If your product is not working correctly,**
**DO NOT RETURN IT TO THE STORE.**

For technical assistance, contact a Lenovo support specialist 24 hours a day by calling toll free **1-877-4 LENOVO (1-877-453-6686).**

Additionally, you can find support information and updates on the Lenovo Web site located at **http://consumersupport.lenovo.com.**

* Only for the users from the United States.

New World. New Thinking.™

www.lenovo.com

©Lenovo China 2009

lenovo®

P/N: 147002476