Lenovo

IdeaCentre D400 Series

User Guide

Version 1.0 2009.7

31038690B

lenovo

ideacentre

Important Safety Information

Before using this manual, it is important that you read and understand all of the related safety information for this product. Refer to the *Safety and Warranty Guide* that you received with this product for the latest safety information. Reading and understanding this safety information reduces the risk of personal injury or damage to your product.

Danger: Be aware of extremely hazardous or lethal situations.

Attention: Be aware of possible damage to programs, devices, or data.

Note: Pay attention to this important information.

© Copyright Lenovo 2009.

Contents

Important Safety Information

Introduction..... 1

Chapter 1 Instruction for using Home Server hardware 4

Front view.....4

Front panel LED indicators.....5

Using the one-touch USB backup feature.....8

Rear view.....9

LAN related LEDs on the rear side 10

Connect the power cord.....11

Connect to the home network 11

Lenovo Home Server Recovery DVD 11

Client Software Installer CD.....12

Computer Restore CD 12

Chapter 2 Installing the software 13

Install the Windows Home Server Connector on the client computer.....13

Install the Lenovo Home Server EasyAccess utility 24

Install the LightsOut client utility 30

Chapter 3 Restoring a home computer 34

Chapter 4 Server Recovery..... 35

Chapter 5 Windows Home Server Console 40

The Windows Home Server Console window 41

Computers and Backup.....41

User Accounts.....42

31038690B_D400_UG_EN_V1.0.indd 1 2009.7.8 4:27:48 PM

Shared Folders 42
Server Storage.....43
LightsOut.....43
Network Health.....44

Chapter 6 Settings 45
Remote Access 45

Chapter 7 Configuring the hard disk drive 47
Adding a hard disk drive 47
Replacing the hard disk drive.....52

Chapter 8 Troubleshooting 57
Post error code for the system state LED indicator 58

31038690B_D400_UG_EN_V1.0.indd 2 2009.7.8 4:27:48 PM

Introduction

Home Server is a data storage and digital media content server for families and SOHO Small Businesses with multiple computers and multimedia devices on a home network who want to enjoy their digital experiences when and where they want.

Home Server enables you to access easily and more securely your files and computers from inside and outside your family or SOHO Small Business. You can use it to store your important photos, videos, music and files in a central location for access anytime and anywhere.

Specifications for Home Server

- **Processor**

  Intel® Atom™ 230

- **Drive storage**

  Up to four 3.5-inch hot-swappable hard disk drive (HDD)

  SATA 2 or above edition as primary drive.

- **Memory**

  Up to 2 GB DDR2 MHz unbuffered SDRAM

- **Ethernet**

  High performance (10/100/1000) Gigabit Ethernet port

- **I/O ports**

  USB 2.0 ports (1 front and 4 rear), Gigabit Ethernet port, eSATA port, recovery/reset button

- **Power**

  100-127/200-240V, 3.5V, 50/60 Hz

- **Server operating system (OS) support**

  Windows Home Server

- **Client computer OS support**

  Windows Vista 32-bit and 64-bit Edition

31038690B_D400_UG_EN_V1.0.indd 1 2009.7.8 4:27:48 PM

Windows XP 32-bit and 64-bit Edition

Client computer installation

- Up to 10 home computers can install and use the Windows Home Server Connector software which enables automatic backup and access to shared folders on the home server.

Do not support Wireless

- You must use an Ethernet cable to connect your Home Server to your broadband router or home computer. Wireless connecting your Home Server to your broadband router or home computer is not supported.
- Can not setup a shared network printer with your Home Server.

Recommended environment for client computer

For best results, your computer should meet the following hardware and software requirements:

- **Processor**

  1 GHz Pentium 3, Pentium 4, AMD x64, or newer processor

- **System memory**

  512 MB or above

- **Supported operating systems for home computers**

  The following operating systems for home computers support Windows Home Server:

  - Windows Vista Home Basic
  - Windows Vista Home N (EU only)
  - Windows Vista Home Premium
  - Windows Vista Business
  - Windows Vista Business N (EU only)
  - Windows Vista Enterprise
  - Windows Vista Ultimate
  - Windows XP Home with Service Pack 2 (SP2)
  - Windows XP Professional with SP2
  - Windows XP Media Center Edition 2005 with SP2 and Rollup 2
  - Windows XP Media Center Edition 2004/2005 with SP2
  - Windows XP Tablet Edition with SP2

31038690B_D400_UG_EN_V1.0.indd 2 2009.7.8 4:27:48 PM

- **Internet connection**
  - 1000 Mbps Gigabit Ethernet connection
  - Broadband connection (DSL only)
  - Broadband router (DHCP enabled)

31038690B_D400_UG_EN_V1.0.indd 3 2009.7.8 4:27:48 PM

Chapter 1

Instruction for using Home Server hardware

Attention: Do not open the rear cover of your Home Server chassis at any time. If you are unable to resolve a problem on your own, contact the Lenovo Customer Service.

Front view

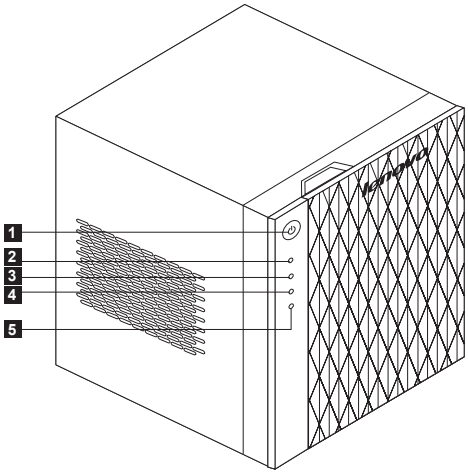

31038690B_D400_UG_EN_V1.0.indd 4 2009.7.8 4:27:50 PM

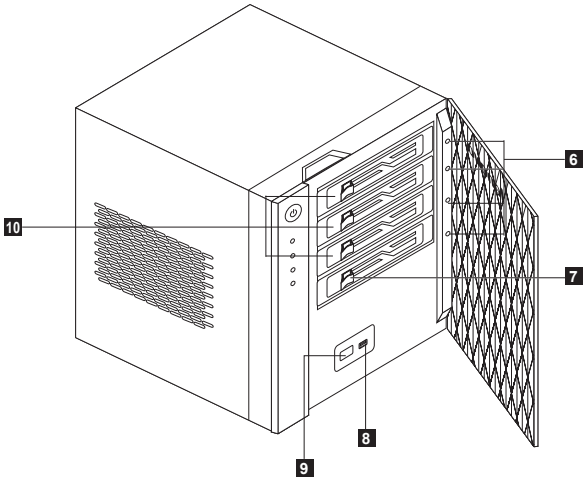

1 Power button
2 Network indicator
3 Hard disk drive (HDD) status indicator
4 System status indicator
5 USB backup indicator
6 Individual HDD status indicator
7 System hard drive
8 USB connector
9 USB backup button
10 Hot-swappable HDDs (3)

Front panel LED indicators

The LED indicators mounted on the front panel provide information about the status of the system, its hard drives, and its network connection.

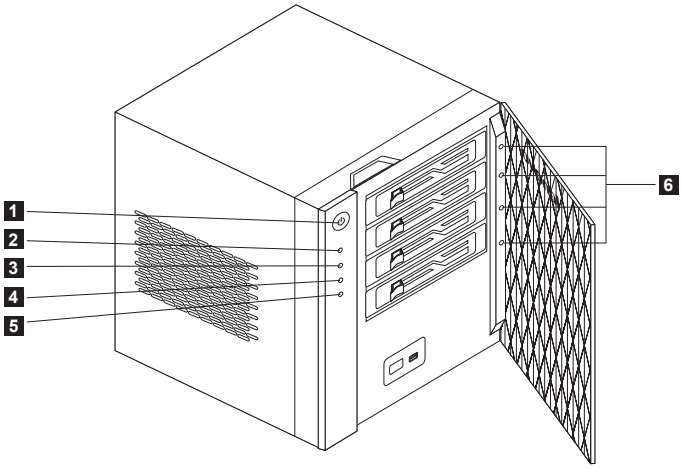

31038690B_D400_UG_EN_V1.0.indd 5 2009.7.8 4:27:53 PM

LED indicator	Color status	Description
1 Power button LED (Single color)	Blue ON	The system is connected to the power supply and is turned on and ready for use.
	Blue blink	The system is booting. The system is in S3 sleep mode (suspend to memory).
	OFF	Power OFF
2 Network LED (Single color)	Blue ON	The network is connected.
	Blue blink	The network is active.
	OFF	The network is disconnected.
3 HDD access LED (Single color)	Blue blink	Disk access
	OFF	No access
4 System status LED (Dual color)	Purple ON	The system stays on initial mode.
	Blue blink	The operating system is in the process of booting or in the process of shutting down.
	Blue ON	The operating system has booted (running/normal operation).
	Red blink	Boot from internal Windows PE for system recovery/reset
	Blue and purple blink	Boot from USB (Reserved for BIOS update while boot block is active.)
	Red ON	When the system is booting: System failure: See POST error code System status Red ON with HDD LEDs. When the system is running: Go to Health dialogue box to check what events are triggered or happened.
	Red blink	When the system has booted: HDD LED 0~3 Red blinking

31038690B_D400_UG_EN_V1.0.indd 6 2009.7.8 4:27:54 PM

5 USB backup LED (Single color)	Blue ON	The USB is connected. The backup is complete.
	Blue blink	The system is backing up files from a USB storage device.
	OFF	The USB storage device is not mounted.
6 Individual HDD status LED (Two colors + one mixed color)	Purple ON	A disk was mounted and has not been manually added into the Windows Home Server HDD volume. Or, a disk was mounted and has been manually removed from the Windows Home Server HDD volume.
	Purple blink	A disk was mounted and is in the process of being manually added/ removed into the Windows Home Server HDD volume.
	Blue ON	The disk was mounted and the disk has been manually added into the Windows Home Server HDD volume.
	Red blink	A disk was failure with system status LED RED ON.
	OFF	The disk was un-mounted.

31038690B_D400_UG_EN_V1.0.indd 7 2009.7.8 4:27:54 PM

Using the one-touch USB backup feature

The USB backup button on the front panel allows you to back up the data from a USB storage device to the Home Server. Windows Home Server first copies all files into the Public shared folder, and then classifies the files according to their media type into the corresponding shared folders, namely Music, Videos and Photos. When Windows Home Server cannot determine the file type, the file is automatically stored in the Other folder.

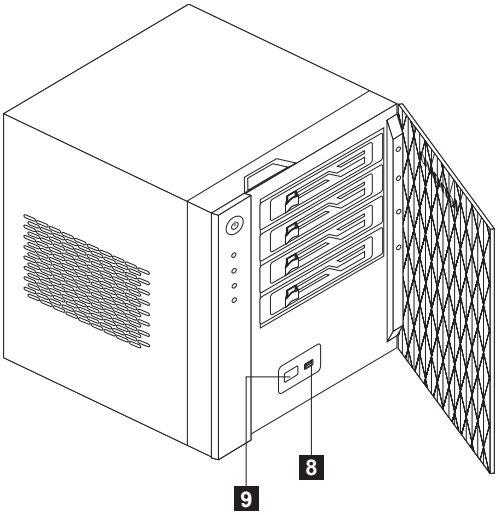

Attention:

- Only the front USB port supports the backup feature.
- The data backup feature supports only standard USB flash disks, USB hard disks and USB card readers free of internal Hub.

  (Note: “standard” refers to media that do not require specific drivers and can be recognized directly by Microsoft Windows Home Server.)

1. Plug the USB device into the front USB connector **8** .
2. Press the USB backup button **9** . The USB backup indicator blinks blue.
3. All files on the USB storage device are copied into the Public shared folder.

Note: During the copy process, Windows Home Server checks the file properties including time, size and file name to verify whether the same file or a file of the same name already exists in the folder. If there is a conflicting file name, the data will be copied and the file name will be assigned a serial number. If the file of exactly the same properties already

31038690B_D400_UG_EN_V1.0.indd 8 2009.7.8 4:27:56 PM

exists in the Public shared folder, the file will be filtered out of the copy process.

4. Afterwards, Windows Home Server automatically copies and classifies the newly copied files according to their file type.
5. You can find files of different types in their corresponding shared folders (Music, Videos and Photos). Files other than music, videos and photos are found in the Other folder.
6. When the backup process is complete, the USB backup indicator turns solid blue.

Rear view

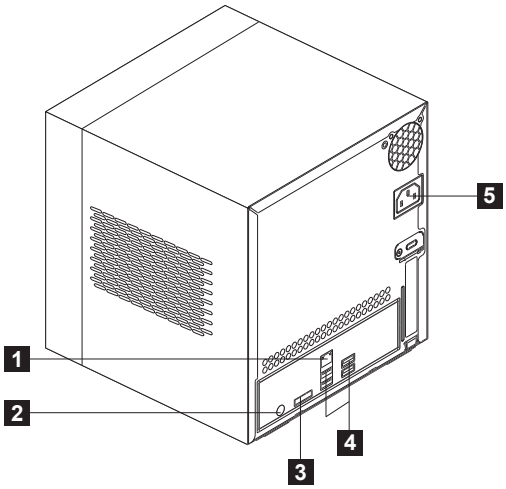

1 Ethernet connector
2 Recovery/reset button
3 eSATA connector
4 USB connector
5 Power connector

31038690B_D400_UG_EN_V1.0.indd 9 2009.7.8 4:27:58 PM

LAN related LEDs on the rear side

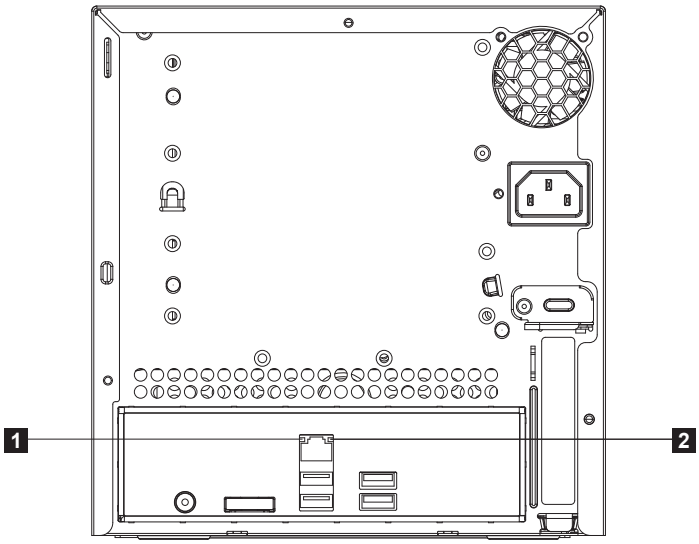

LED indicator	Color status	Description
1 LAN SPEED-LED (Rear side, RJ45) (Dual color)	Amber ON	1000 Mbit/s
	Green ON	100 Mbit/s
	OFF	10 Mbit/s or Disconnected
2 LAN ACTIVE-LED (Rear side, RJ45) (Single color)	Green blink	Access

31038690B_D400_UG_EN_V1.0.indd 10 2009.7.8 4:28:00 PM

Connect the power cord

Plug the power cord into the power connector and the other end of the power cord into an electrical outlet.

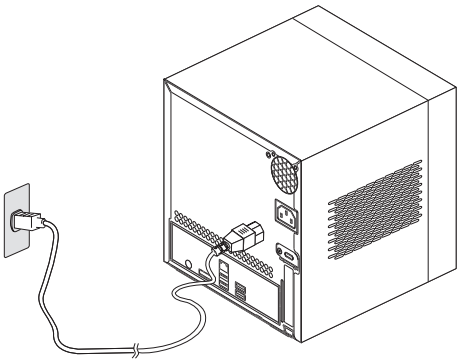

Connect to the home network

Connect one end of the Ethernet cable to the Home Server and the other end to an available Ethernet port on your router.

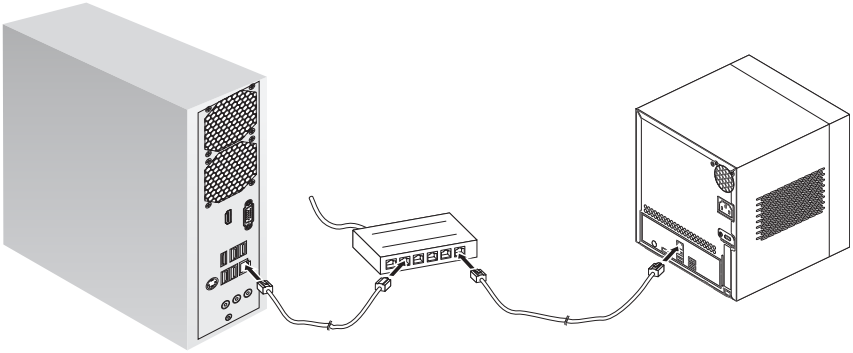

Lenovo Home Server Recovery DVD

The Lenovo Home Server Recovery DVD will lead you through the steps to recover your Windows Home Server system. You can also restore your Windows Home Server to the original factory configuration.

31038690B_D400_UG_EN_V1.0.indd 11 2009.7.8 4:28:04 PM

Client Software Installer CD

The Client Software Installer CD will lead you through the steps to install the Windows Home Server Connector on the computers you want to connect to your home server. It will also install the LightsOut client utility.

Computer Restore CD

The Computer Restore CD will lead you through the steps to recover your home computer system from a backup that is located on your home server. You need to back up the data from your home computer before recovering the computer system.

31038690B_D400_UG_EN_V1.0.indd 12 2009.7.8 4:28:05 PM

2

Chapter

Installing the software

Install the Windows Home Server Connector on the client computer

After setting up your Home Server, you must install the Windows Home Server Connector on your computer.

Note:

- Before installing the Windows Home Server Connector on the client computer, make sure the HDD indicator on the front panel lights is blue.
- Prior to installing the Windows Home Server Connector, make sure you have administrator privileges. Refer to Windows Help for more details on changing your user account settings.

1. Place the Windows Home Server Connector **Client Software Installer CD** in the optical drive of the home computer. Single-click on the **Run SWINstaller.exe** file to begin installation.

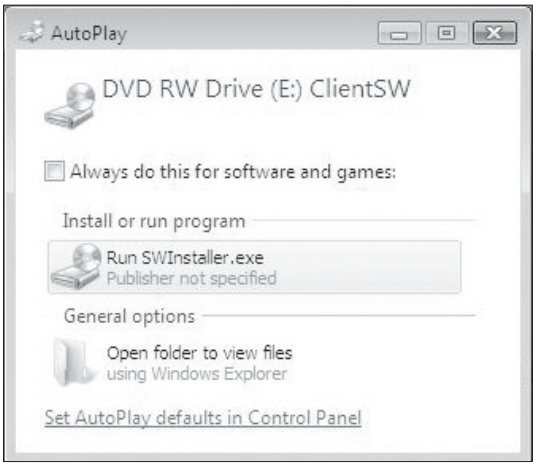

31038690B_D400_UG_EN_V1.0.indd 13 2009.7.8 4:28:05 PM

2. The End User License Agreement window appears. Select the “I accept terms in End User license Agreement” option button, and then click **Next**.

3. Select the “Install Windows Home Server Connector SW” option button if you want to install SW for the Connector.
4. Click **Install** to begin the installation process.

31038690B_D400_UG_EN_V1.0.indd 14 2009.7.8 4:28:06 PM

5. The Windows Home Server Connector installation starts to find and connect to your Home Server.

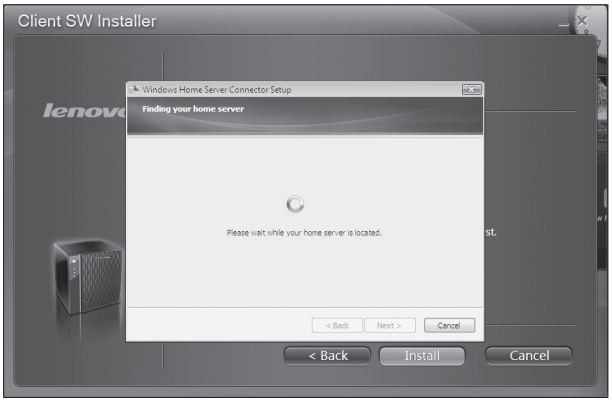

6. Once the server is found, the Welcome window appears.
7. Click **Next**.

31038690B_D400_UG_EN_V1.0.indd 15 2009.7.8 4:28:06 PM

8. Click **Next**. The Installing Windows Home Server Connector window appears.

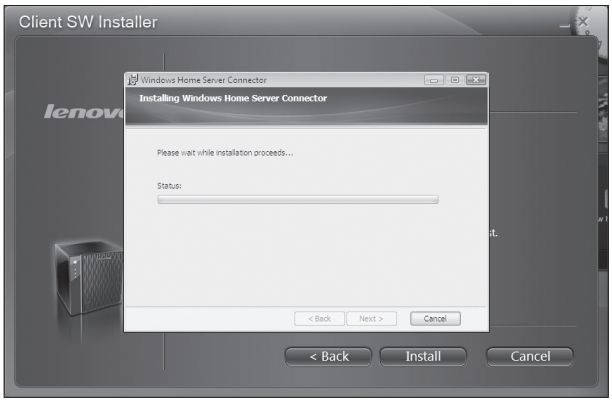

9. Select the "Let me download and install the updates myself" option button if you don't want to download the updates for the Connector.
10. Click **Next**.

Note: Selecting the first option “Download the updates from my home server and install them automatically” will spend a lot of time to download the updates for the Connector and the windows appeared will be different with below steps instruction.

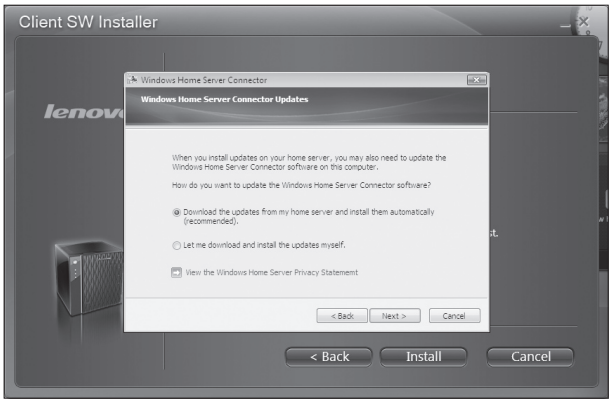

11. Select the “Yes, wake up this computer if it is in sleep or hibernate mode and back it up” option button if you want Windows Home Server to wake up your sleeping computer to back it up.

31038690B_D400_UG_EN_V1.0.indd 16 2009.7.8 4:28:07 PM

12. Click **Next**.

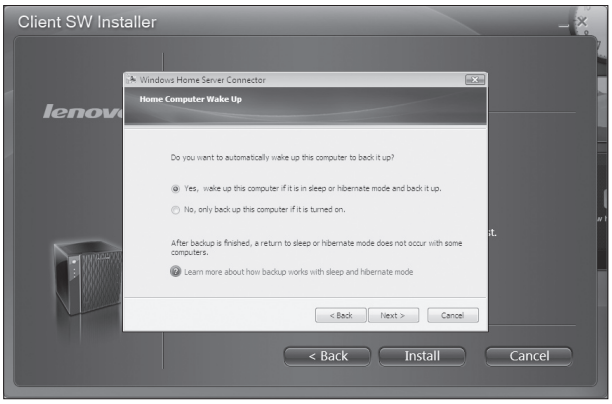

13. Click **Next** to perform the initial configuration of Windows Home Server.

Note: The initial configuration of Windows Home Server is performed only once on the home computer.

31038690B_D400_UG_EN_V1.0.indd 17 2009.7.8 4:28:07 PM

14. Click the **Next** arrow. The Windows Home Server initialization begins. This process could take several hours depending on your hardware.

15. Once the initialization is complete, click the **Next** arrow.

16. Enter a name for your Home Server.

    The name of your Home Server can contain a maximum of 15 characters (including letters, numbers or hyphens) with no spaces.

31038690B_D400_UG_EN_V1.0.indd 18 2009.7.8 4:28:07 PM

17. Click the **Next** arrow.

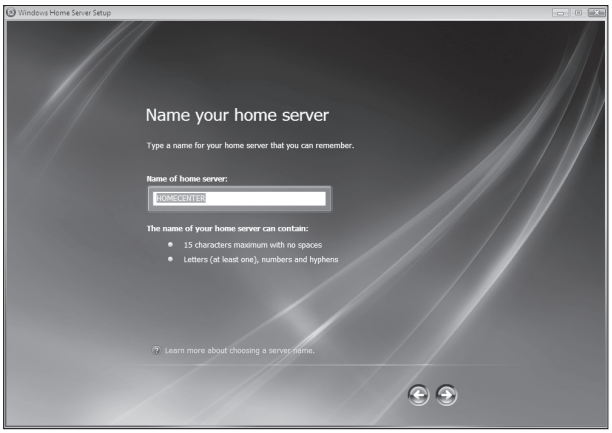

18. Enter a strong Windows Home Server administrator password, confirmation password, and password hint. This is the password that you can use to manage your Home Server from the Windows Home Server Console.

    The password must be at least 7 characters and must contain at least three of the following four categories:

    - Uppercase letters
    - Lowercase letters
    - Numbers
    - Symbols (such as !, @, #, etc.)

19. Click the **Next** arrow.

31038690B_D400_UG_EN_V1.0.indd 19 2009.7.8 4:28:08 PM

20. Select the “On (recommended)” option button if you want to use Windows Update to automatically download and install updates for Windows Home Server, and then click the **Next** arrow.

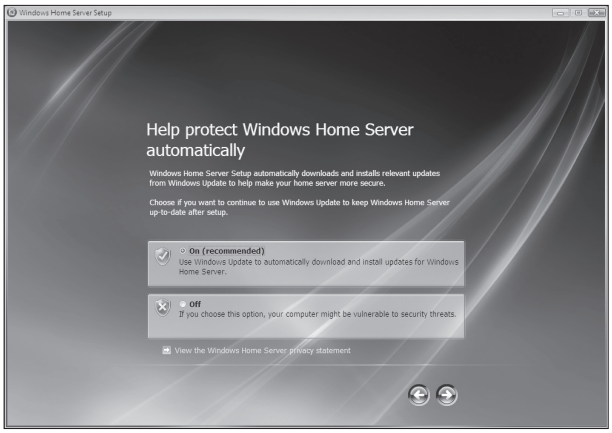

21. Choose if you want to participate in the Customer Experience Improvement Program, and then click the **Next** arrow.

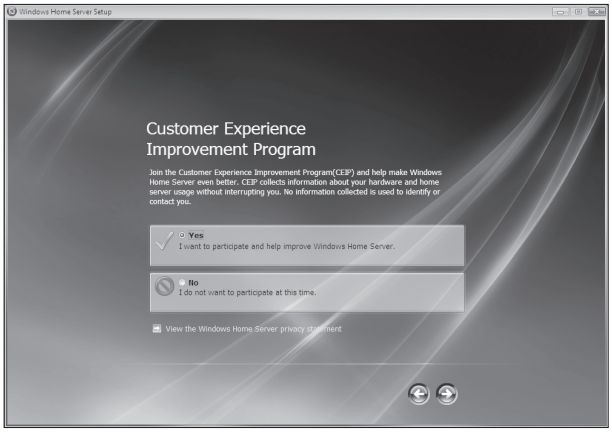

31038690B_D400_UG_EN_V1.0.indd 20 2009.7.8 4:28:08 PM

22. Choose if you want to participate in the Windows Error Reporting program, and then click the **Next** arrow.

23. Click the **Next** arrow to automatically download and install available Windows Home Server updates. This could take some time to complete but does not require additional information from you.

Attention: Do not restart or turn off your Home Server during the update process.

24. Once installation is complete the Windows Home Server windows displays.

31038690B_D400_UG_EN_V1.0.indd 21 2009.7.8 4:28:09 PM

25. Click the **Next** arrow. The Windows Home Server log in window displays. You can now manage the Home Server through the remote admin console.

26. Enter the administrator password, and then click the **Next** arrow. The Setting Password dialog box appears.

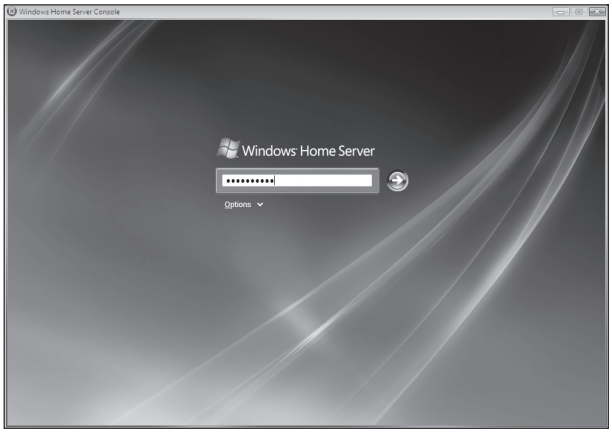

31038690B_D400_UG_EN_V1.0.indd 22 2009.7.8 4:28:09 PM

27. Enter the administrator password to start the hardware health and performance monitor service, then click **OK**.

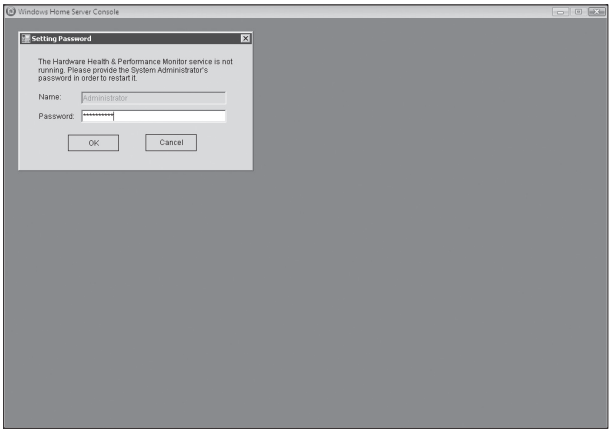

28. The Windows Home Server Console window appears.

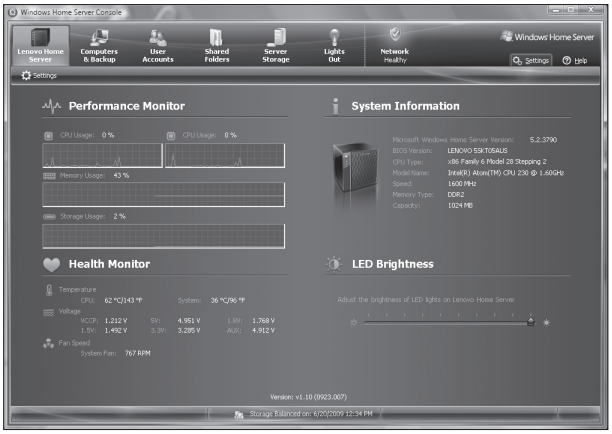

The Windows Home Server icon also appears in the system task tray and the Shared Folders desktop shortcut appears on your desktop.

The Windows Home Server icon displays the current health and status of the Home Server as well as all the computers connected to your home network. Right-clicking on the icon allows access to the Windows Home Server.

You can also use Shared Folders to store and organize files on the Windows Home Server.

31038690B_D400_UG_EN_V1.0.indd 23 2009.7.8 4:28:10 PM

Install the Lenovo Home Server EasyAccess utility

1. Select the “Install Lenovo Home Server EasyAccess utility” option button.
2. Click **Install** to begin the installation process.

3. The Windows Home Server EasyAccess installation starts to find and connect to your Home Server.
4. Once the server is found, the Welcome window appears.
5. Click **Next**.

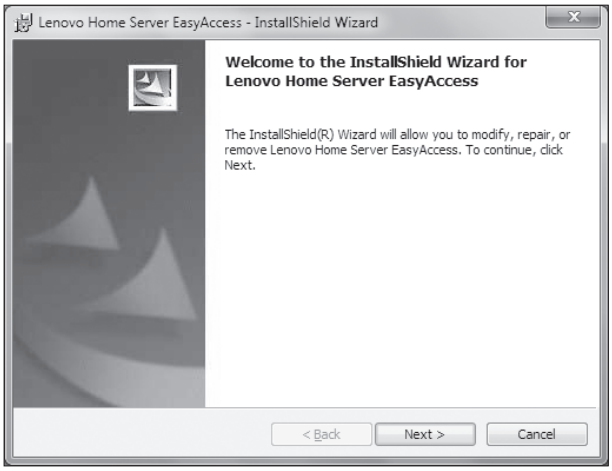

31038690B_D400_UG_EN_V1.0.indd 24 2009.7.8 4:28:10 PM

6. The License Agreement window appears. Select the “I accept the terms in the license agreement” option button, and then click **Next**.

7. Click **Next** to install in this folder, or click **Change** to install in a different folder.

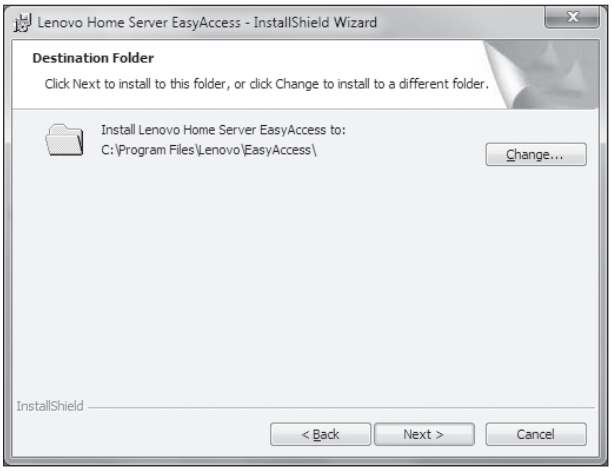

8. Select a setup type:

- Complete

  All program features will be installed. (Requires the most disk space.)

- Custom

  Choose which program features you want installed and where they will be installed. Recommended for advanced users.

31038690B_D400_UG_EN_V1.0.indd 25 2009.7.8 4:28:10 PM

9. After selecting the setup type, click **Next**.

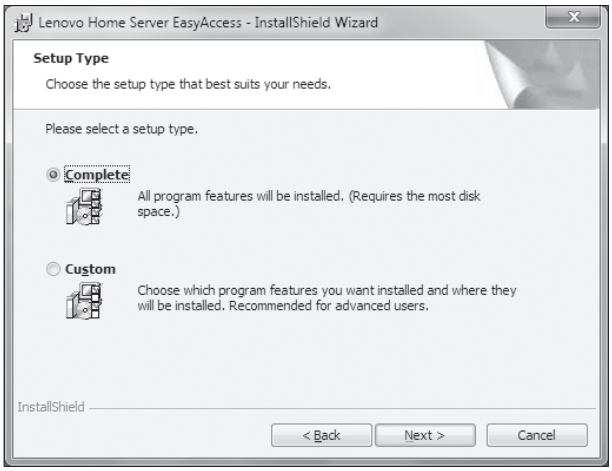

10. Click **Install** to begin the installation.

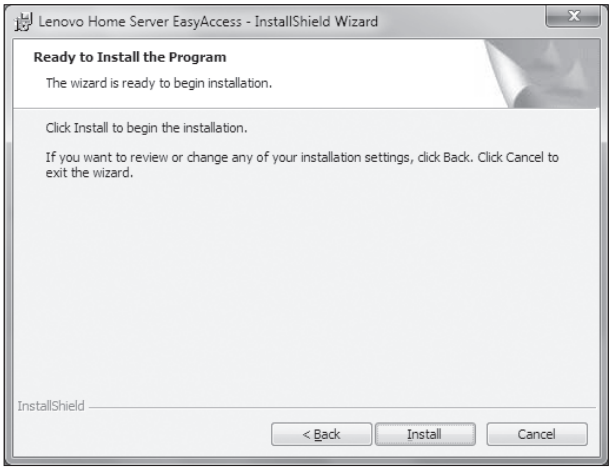

31038690B_D400_UG_EN_V1.0.indd 26 2009.7.8 4:28:11 PM

11. Wait while the InstallShield Wizard installs Lenovo Home Server EasyAccess. This may take several minutes.

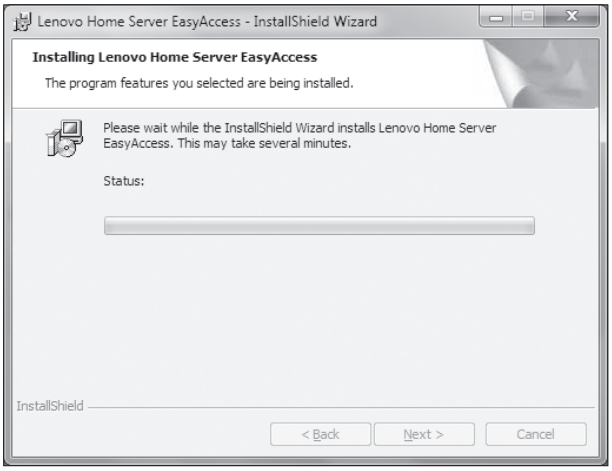

12. Once the InstallShield Wizard is completed, click **Finish**.

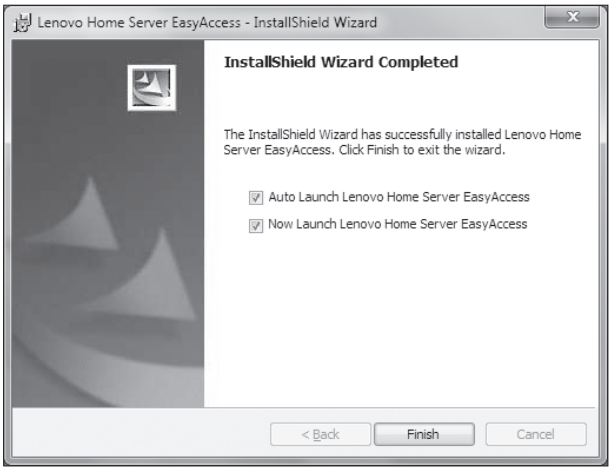

31038690B_D400_UG_EN_V1.0.indd 27 2009.7.8 4:28:11 PM

13. When the Connect to Lenovo Home Server window appears, click **Connect**.

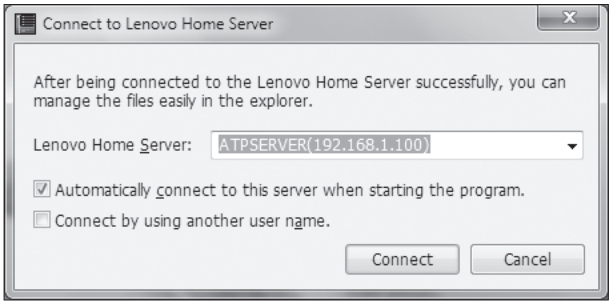

14. Enter your password to connect to the Lenovo Home Server.

31038690B_D400_UG_EN_V1.0.indd 28 2009.7.8 4:28:11 PM

15. After connecting to the home server, the network drive ATPSERVER (ADMINISTRATOR) will become visible.

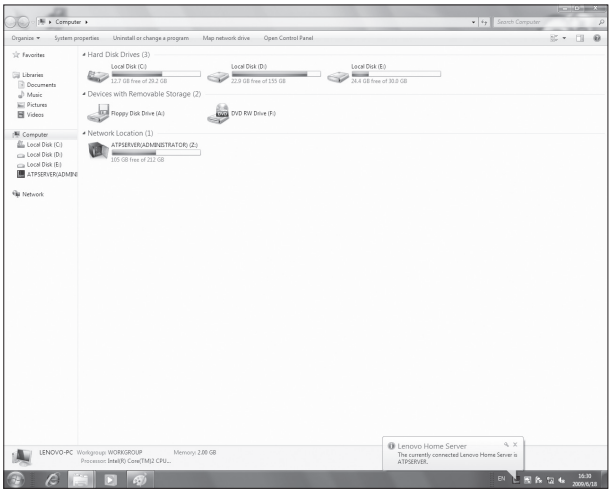

16. Right-click the ATPSERVER (ADMINISTRATOR) icon and select the **Start the console** option to launch the Windows Home Server Console program.

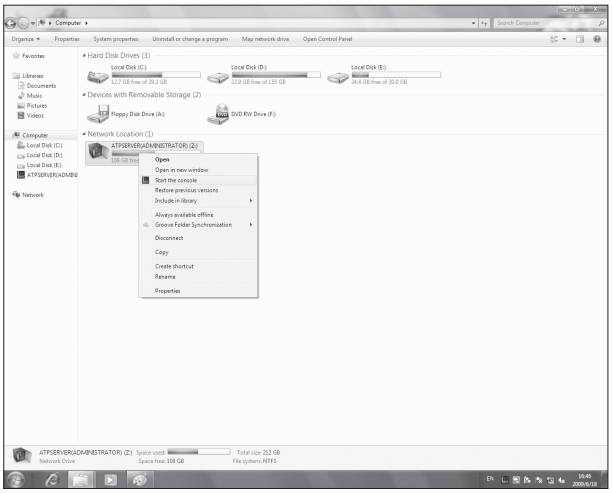

31038690B_D400_UG_EN_V1.0.indd 29 2009.7.8 4:28:12 PM

17. Right-click a file icon from Local Disk, and select **Upload to ATPSERVER**. You may upload the file from your home computer to your home server through this network drive.

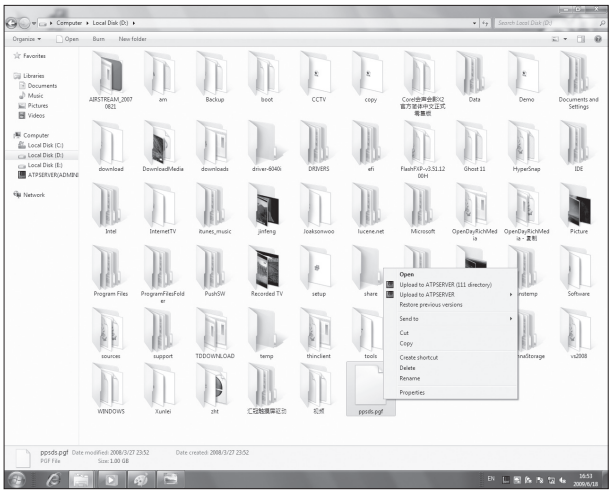

Install the LightsOut client utility

1. Select the “Install LightsOut client utility” option button.
2. Click **Install** to begin the installation process.

31038690B_D400_UG_EN_V1.0.indd 30 2009.7.8 4:28:12 PM

3. The InstallAware Wizard windows appears.

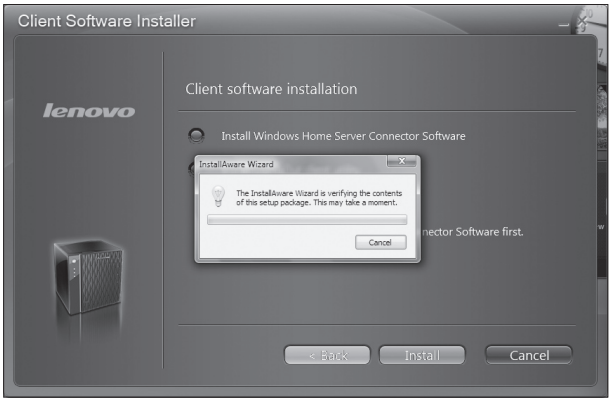

4. Select your preference language from the pop-up “Select Setup Language” dialog box, and then click **OK**.

Note: Select the same language as the client PC system when installing this software.

5. Once the language is selected, the Welcome window appears.

31038690B_D400_UG_EN_V1.0.indd 31 2009.7.8 4:28:12 PM

6. Click **Next**.

7. Wait for the installation process.

31038690B_D400_UG_EN_V1.0.indd 32 2009.7.8 4:28:13 PM

8. Click **Finish**.

31038690B_D400_UG_EN_V1.0.indd 33 2009.7.8 4:28:13 PM

Chapter 3

Restoring a home computer

You can easily restore any of your home computers to a previous point in time with a backup stored on your home server. You can do this by using the Computer Recovery CD. This CD can be used to restore all of the files on your home computer from a backup, including the Windows operating system and applications.

To restore a home computer:

Important: You need the Windows Home Server administrator password to restore a home computer.

1. Place the Computer Recovery CD in the CD drive of the computer that you want to restore.
2. Restart the computer and boot from CD.
3. Follow the instructions in the Restore Computer Wizard to restore the hard drives on your home computer.

Note: Your home computer must be connected to the home network with an Ethernet network cable before you begin the restore. Wireless connection is not supported.

If the drivers did not load or the NIC (network interface card) driver cannot be found during computer recovery, you can click “Where can I find drivers for my hardware?” to bring up an online help file for detailed instructions on how to find and load drivers.

Go to http://www.microsoft.com/windows/products/winfamily/windowshomeserver/support.mspx for more information.

31038690B_D400_UG_EN_V1.0.indd 34 2009.7.8 4:28:13 PM

4

Chapter

Server Recovery

Server Recovery will lead you through the steps to recover your Windows Home Server system. You can also return your Windows Home Server to the original factory configuration.

1. Place the Server Recovery disc in the optical drive of the home computer. Single-click on the **Run Recovery.exe** file to begin the installation.

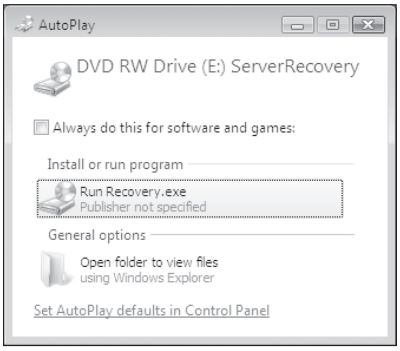

2. The Welcome window appears. Click **Next**.

31038690B_D400_UG_EN_V1.0.indd 35 2009.7.8 4:28:14 PM

3. The End User License Agreement window appears. Select the “I accept terms in End User License Agreement” option button, and then click **Next**.

Note: Before you proceed with Server Recovery, make sure to perform the following steps:

(1) Remove Windows Home Server Connector software from your client computer.

(2) Turn off Windows Home Server by holding down the power button for several seconds.

(3) Push with a sharp object into the pinhole on the back of the Windows Home Server device, and then press the power button to boot up the system.

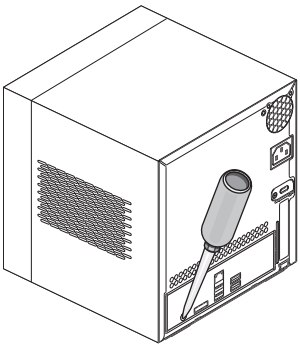

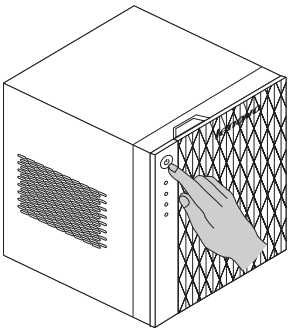

31038690B_D400_UG_EN_V1.0.indd 36 2009.7.8 4:28:16 PM

4. Click **Next**.

5. Click **Next**.

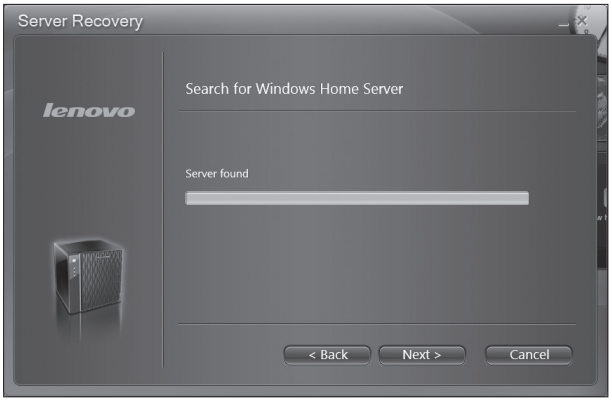

31038690B_D400_UG_EN_V1.0.indd 37 2009.7.8 4:28:16 PM

6. Select a Recovery mode:

- Server Recovery: (recommended)

  This option will help you to recover your system from system failure.

Note: System settings and user accounts will be lost. Data recovery will be attempted.

- Factory Reset:

  Factory Reset will restore system back to the factory configuration.

Note: System settings, user accounts and data will be erased.

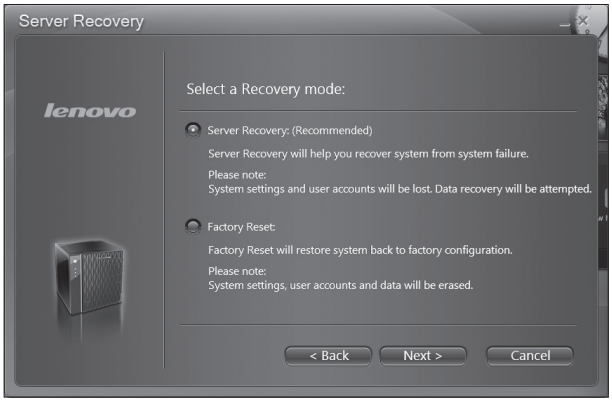

7. Click **Next**.

31038690B_D400_UG_EN_V1.0.indd 38 2009.7.8 4:28:17 PM

8. Click **Next**.

9. Reboot the Windows Home Server to finish the recovery process.

31038690B_D400_UG_EN_V1.0.indd 39 2009.7.8 4:28:17 PM

5

Chapter

Windows Home Server Console

The Windows Home Server Console is a tool that provides remote management of your Home Server and allows you to monitor and back up computers on the home network. It allows you to remotely administer your Home Server from anywhere on the home network. Once logged in, you can monitor the health of your Home Server and the connected computers on the network, create backup schedules connected to the computers, back up computers, manage user accounts and shared folders on the server.

Windows Home Server Console provides access to the following tabs:

- Computers and Backup
- User Accounts
- Shared Folders
- Server Storage
- LightsOut
- Network Health

To learn more about configuring Windows Home Server, click **Help** on the console to open the Windows Home Server Console Help.

Or, go to **http://www.microsoft.com/windowshomeserver** for more information.

31038690B_D400_UG_EN_V1.0.indd 40 2009.7.8 4:28:17 PM

The Windows Home Server Console window

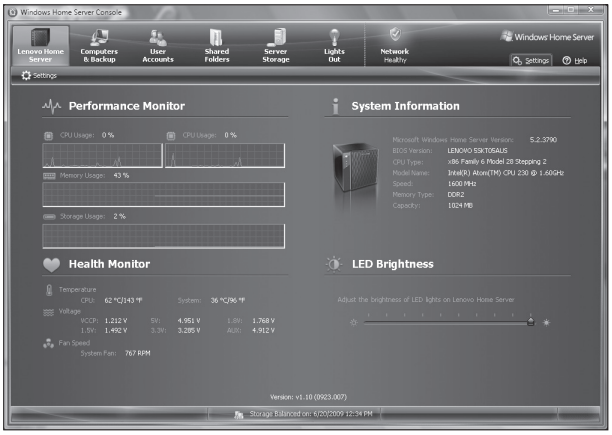

Computers and Backup

You can use the Computers & Backup tab on the Windows Home Server Console to view the home computers connected to the Home Server and monitor the health status of the home computers and administer backups. After you install the Windows Home Server Connector on each of your home computers, they are automatically backed up each night to your Home Server.

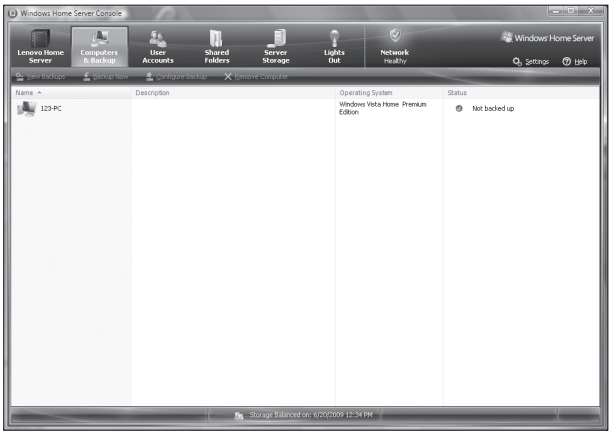

31038690B_D400_UG_EN_V1.0.indd 41 2009.7.8 4:28:18 PM

User Accounts

You can use the User Accounts tab on the Windows Home Server Console to create a personal user account, enable a guest account, and maintain user accounts on the Home Server.

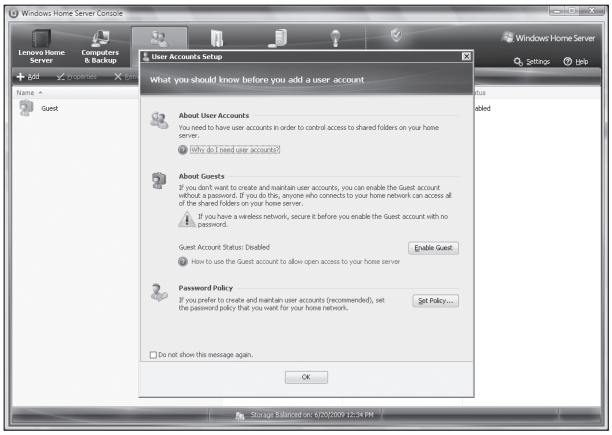

Shared Folders

You can use the Shared Folders tab on the Windows Home Server Console to add, open, remove, and view shared folders on the Home Server. With Shared Folders you can centrally store files on your Home Server so that you can share with other people on your home network.

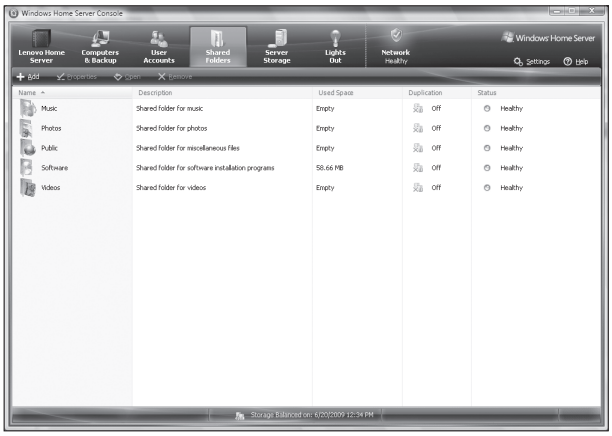

31038690B_D400_UG_EN_V1.0.indd 42 2009.7.8 4:28:18 PM

Server Storage

The Server Storage tab on the Windows Home Server Console displays all the hard drives installed on your Home Server. You can use Server Storage to view, add, repair, and remove hard drives from the Home Server.

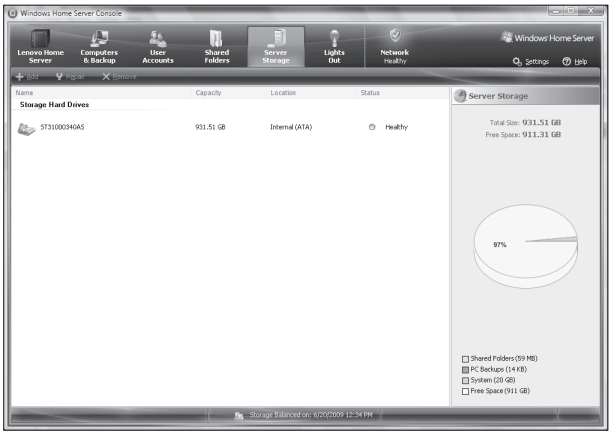

LightsOut

- LightsOut is a power management add-in software that allows you to set your Home Server into suspend mode or wake the system at a chosen time with the aid of a calendar event.

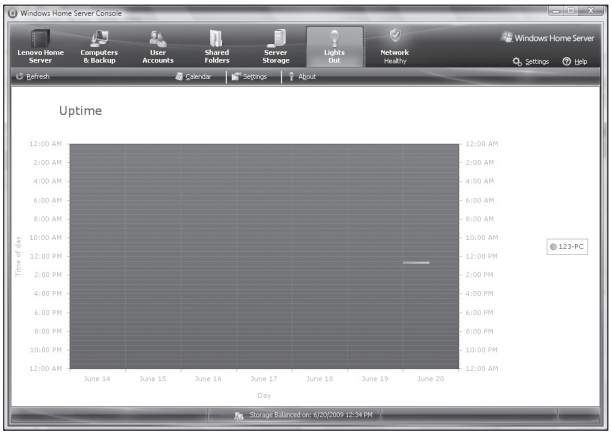

31038690B_D400_UG_EN_V1.0.indd 43 2009.7.8 4:28:19 PM

- Click **Settings**.
- Select “which settings should I use?” from the pop-up window to learn more information about LightsOut.

Network Health

The Network Health tab displays health notifications from your Home Server and your home computers. You can view the health of your entire network from one convenient location so that you can take the necessary actions to correct any problems.

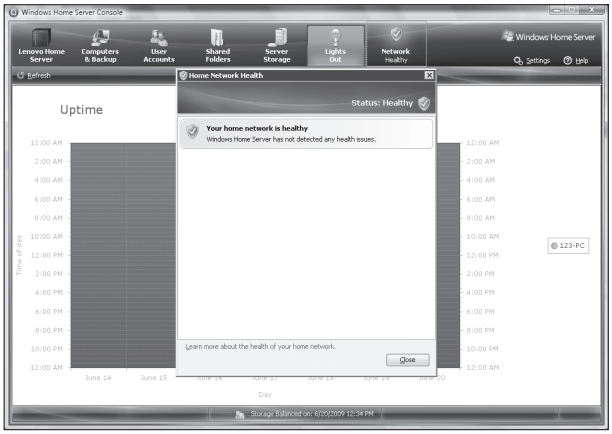

31038690B_D400_UG_EN_V1.0.indd 44 2009.7.8 4:28:19 PM

Chapter 6

Settings

The Settings button on the upper right hand corner of the Windows Home Server Console window allows you to configure your home server settings. The Settings window provides a variety of administrative options.

In the Settings window you can configure the settings for the following categories:

- General
- Backup
- Passwords
- Media Sharing
- Remote Access
- Add-ins
- Hardware Health and Performance Monitor
- IP Configuration
- LightsOut
- Settings for iTunes Server
- Resources

For more information, refer to Windows Home Server Settings in the Windows Home Server Console Help.

Remote Access

The Remote Access settings page helps you configure everything you need to access the Windows Home Server home page from the Internet. To get remote access up and running, you must turn on Web Site Connectivity, configure your router, configure a domain name for your home server, and set the Windows Home Server home page.

31038690B_D400_UG_EN_V1.0.indd 45 2009.7.8 4:28:19 PM

Note:

- Verifying that your router supports UPnP standards

  This step verifies that your router supports the UPnP standard and that the UPnP setting is turned on for your router. Support for the UPnP standard is required for Windows Home Server to automatically configure your router.

- The following issues may cause this problem:
  - ➢ You router is not turned on or is not connected to your network.
  - ➢ The UPnP setting for your router is turned off.
  - ➢ Your router does not support the UPnP standard.
- The following actions may fix this problem:
  - ➢ Turn on your router and ensure your home server is connected directly to it.
  - ➢ Turn on the UPnP setting for your router.
    If your router does support the UPnP standard, you can turn on the UPnP setting. Click **Configure Router** to connect to the configuration Web page for your router. For more information, see the documentation for your router. After you turn on the UPnP setting, click **Refresh** on the **Router Configuration Details** page to run the configuration tests again.
  - ➢ Purchase a new router that supports the UPnP standard.
    You can purchase a new router if your router does not support the UPnP standard and you do not want to manually configure your router.

31038690B_D400_UG_EN_V1.0.indd 46 2009.7.8 4:28:20 PM

7

Chapter

Configuring the hard disk drive

Adding a hard disk drive

The system supports up to four 3.5-inch hot-swappable SATA hard disk drives.

Warning:

- The first hard drive, located at the bottom of the HDD bay, is not hot-swappable.
- Use only hard drives provided by Lenovo.

Caution: Hard drives are formatted before they are added to the server storage. Make sure that you back up any important files that are on the hard drive before you add the drive to server storage. Formatting a hard drive deletes all files on the hard drive.

1. Install the new HDD to the Home Server.

(1) Open the door of the Home Server.

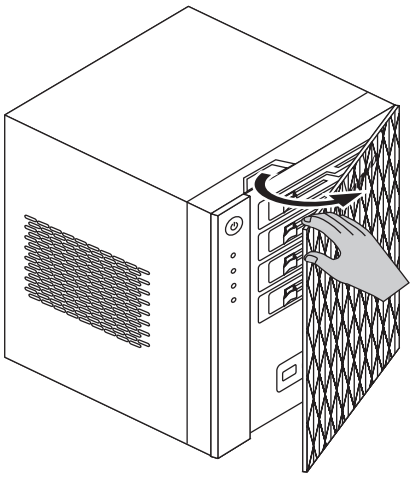

(2) Remove the HDD carrier by pressing the HDD carrier latch.

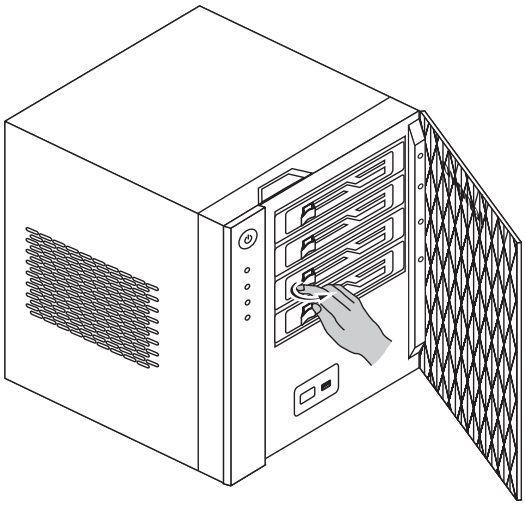

(3) Pull the lever and slide the HDD carrier from the chassis.

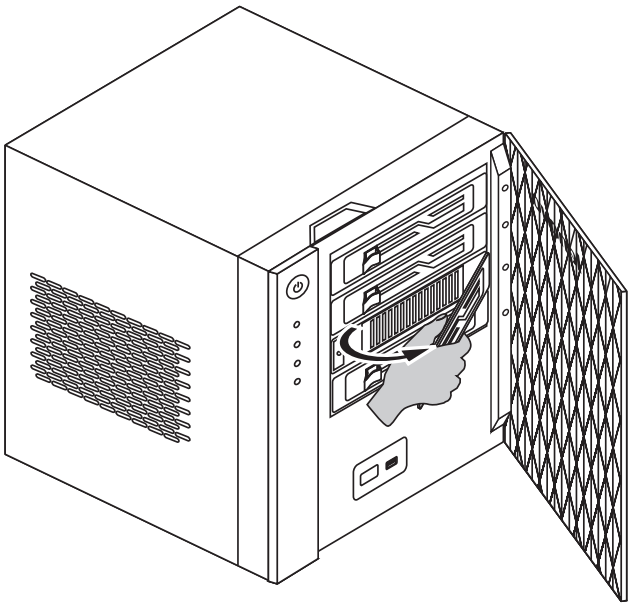

(4) Insert the new drive into the two sides of the carrier, aligning the pins with the HDD's mounting holes.

31038690B_D400_UG_EN_V1.0.indd 48 2009.7.8 4:28:22 PM

(5) With the lever still extended, slide the carrier all the way into the drive bay. Do not push the lever until it begins to close by itself.

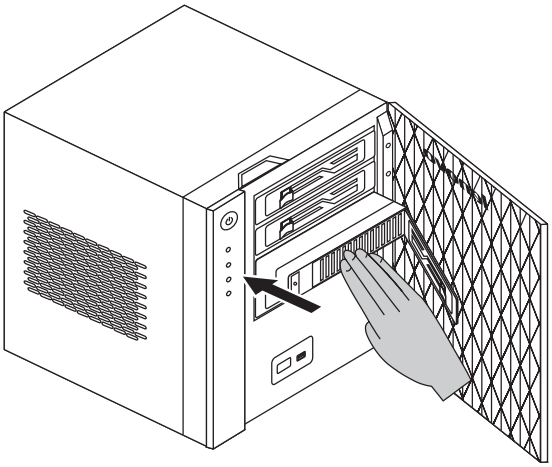

(6) Use the lever to push the carrier until it docks into place, then close the lever.

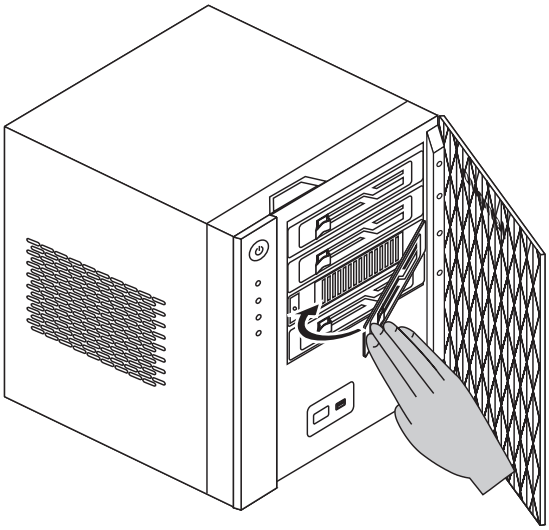

(7) Close the door of the Home Server.

2. Add the hard drive to the server storage in the Windows Home Server Console.

(1) Double-click the **Windows Home Server** icon in the system tray.

31038690B_D400_UG_EN_V1.0.indd 49 2009.7.8 4:28:23 PM

(2) Log on to the **Windows Home Server Console**.

(3) Click the **Server Storage** tab.

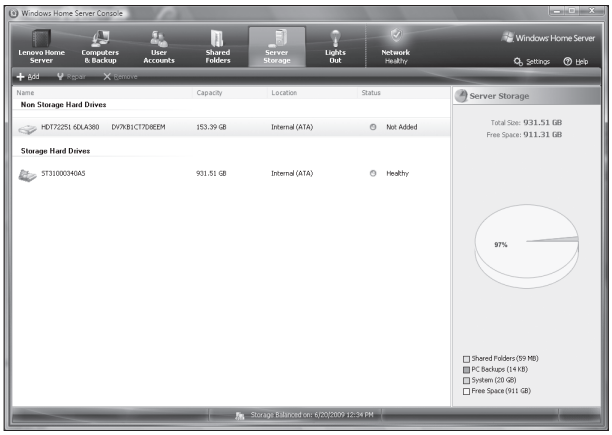

(4) Select the newly installed hard drive (either internal or external), then click **Add** to run the Add a Hard Drive Wizard.

(5) Click **Next**.

31038690B_D400_UG_EN_V1.0.indd 50 2009.7.8 4:28:24 PM

(6) Click **Next**.

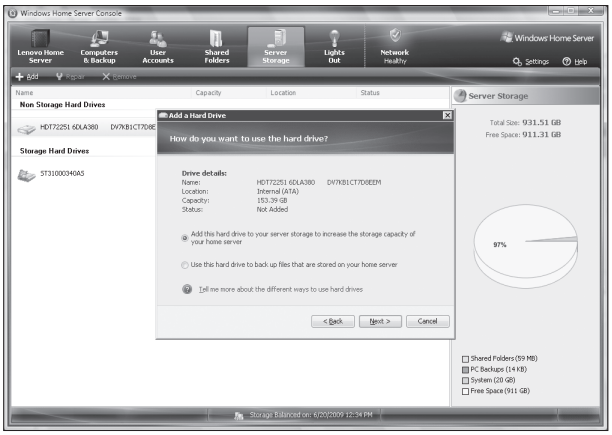

(7) Select from the following options:

- Add this hard drive to your server storage to increase the storage capacity of your home server. This option gives you more space to store home computer backups and more space for your shared folders.
- Use this hard drive to back up files that are stored on your home server. This option allows you to back up all your home server shared folders.

(8) You can refer to the Windows Home Server Console Help for detailed instructions.

Attention: When you add a hard drive to your server storage, you commit it to be part of your total server-storage space. Do not disconnect the hard drive to use it for other purposes. If you want to use the hard drive for other purposes, you should first select the hard drive and click Remove.

31038690B_D400_UG_EN_V1.0.indd 51 2009.7.8 4:28:25 PM

Replacing the hard disk drive

Caution: Always remove the hard drive from the Windows Home Server Console before removing an HDD from the Home Server. You will lose all the files on the hard drive if you physically disconnect the HDD from your Home Server without running the Remove a Hard Drive Wizard. The system will also not be able to find the hard drive in order to connect it again.

Attention: Do not open the rear cover of your Home Server chassis at any time. If you are unable to resolve the problem on your own, contact the Lenovo Customer Service.

1. Safely remove a hard drive from the Windows Home Server Console.

(1) Double-click the Windows Home Server icon in the system tray.

(2) Log on to the Windows Home Server Console.

(3) Click the Server Storage tab.

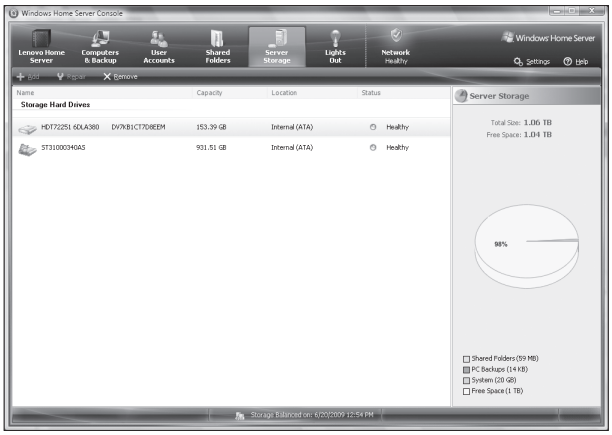

31038690B_D400_UG_EN_V1.0.indd 52 2009.7.8 4:28:25 PM

(4) Select the hard drive you want to remove, then click **Remove** to run the Remove a Hard Drive Wizard.

(5) Click **Next**.

(6) Click **Finish**.

(7) The HDD indicator of the selected drive lights purple.

2. Remove the HDD from the Home Server.

Note: Before removing the HDD, make sure the HDD indicator on the front panel lights is purple.

(1) Open the door of the Home Server.

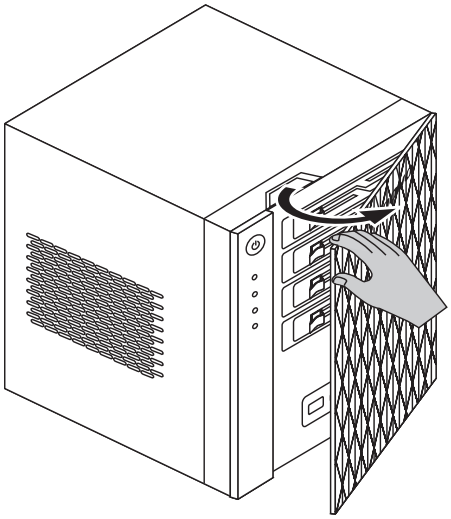

31038690B_D400_UG_EN_V1.0.indd 53 2009.7.8 4:28:26 PM

(2) Remove the HDD carrier by pressing the HDD carrier latch.

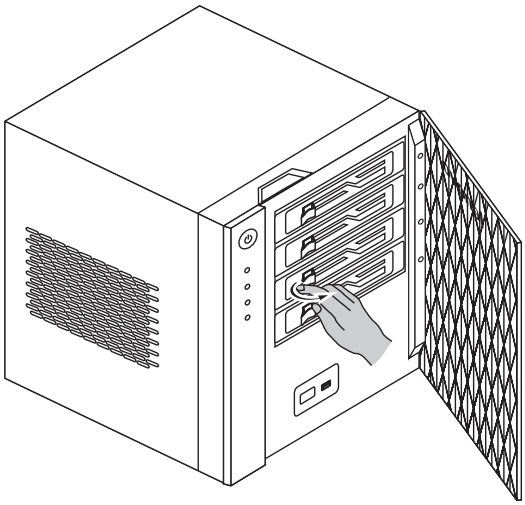

(3) Pull the lever and slide the HDD carrier from the chassis.

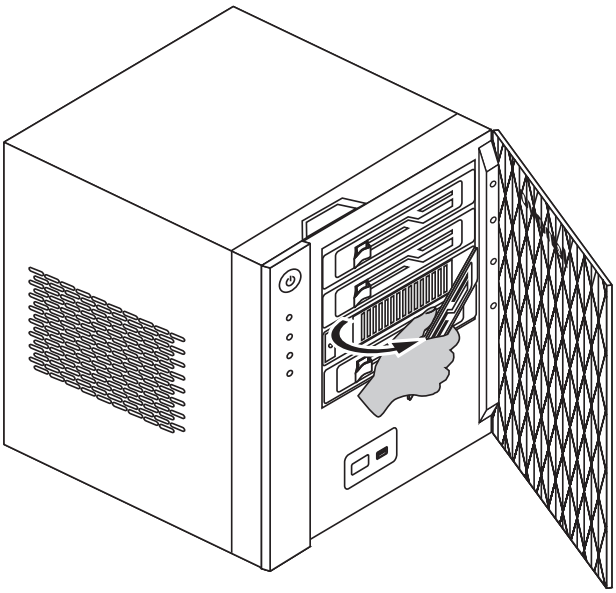

31038690B_D400_UG_EN_V1.0.indd 54 2009.7.8 4:28:27 PM

3. Remove the HDD from the carrier.

(1) Gently pry open the left side rail **1**, as shown.

(2) Remove the drive from the carrier **2**.

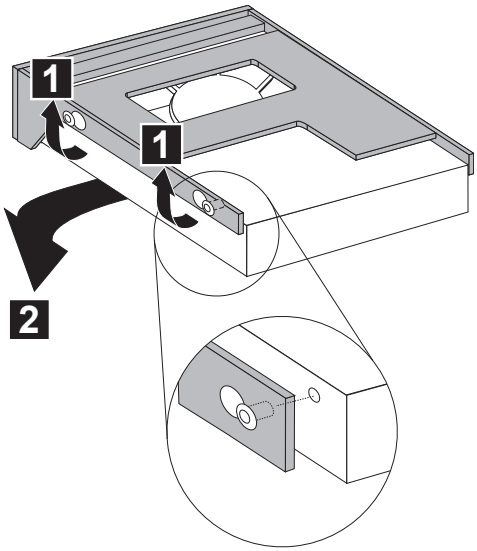

4. Install the new HDD into the carrier.

(1) Insert the new drive into the right side of the carrier, aligning the pins with the HDD's mounting holes **1**.

(2) Slightly bend the left side rail and insert the pins into the HDD's mounting holes **2**.

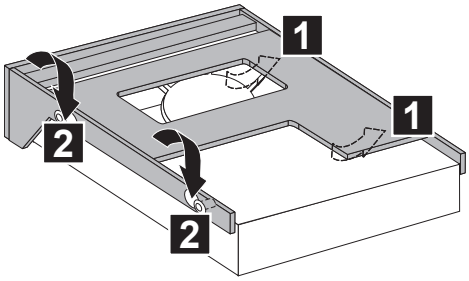

31038690B_D400_UG_EN_V1.0.indd 55 2009.7.8 4:28:28 PM

(3) With the lever still extended, slide the carrier all the way into the drive bay. Do not push the lever until it begins to close by itself.

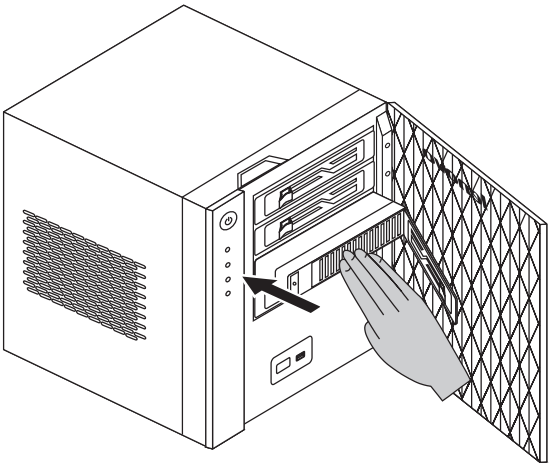

(4) Use the lever to push the carrier until it docks into place, then close the lever.

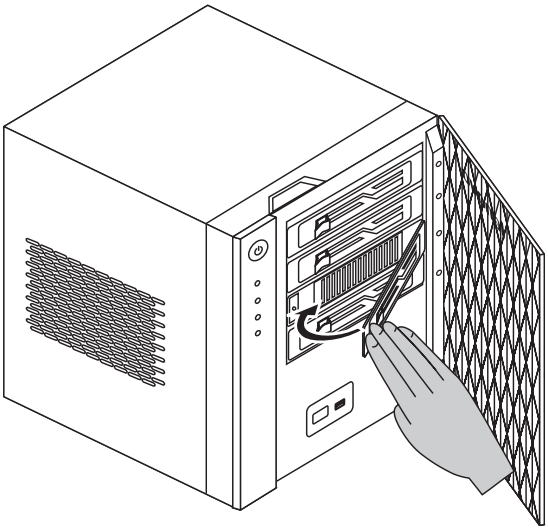

31038690B_D400_UG_EN_V1.0.indd 56 2009.7.8 4:28:30 PM

Chapter 8

Troubleshooting

This chapter describes possible situations that may arise while using your Home Server.

Note: If you are unable to resolve the problem on your own, contact the Lenovo Customer Service.

First steps checklist

- Is there AC power available at the wall outlet?
- Are the power supplies plugged in? Check the AC cable(s) on the back of the chassis and at the AC source.
- Are all cables correctly connected and secured?
- Are all peripheral devices installed correctly?
- Are all device drivers properly installed?
- Did you press the system power button on the front panel to turn the system on (the power indicator should be lit)?
- Is the system power cord properly connected to the system and plugged into an outlet for 100-127 V or 200-240 V?

If you are having problems setting up Windows Home Server, make sure you do the following:

- Plug in and power on your Home Server.
- Connect your Home Server with a wired network connection to your broadband router or to a switch that is connected to your broadband router.

If you are having problems setting up the Windows Home Server Connector software on your home computers, make sure you check the following:

- Connect your home computer to your home network (using either a wired or a

31038690B_D400_UG_EN_V1.0.indd 57 2009.7.8 4:28:30 PM

wireless connection), and make sure the home computer is on the same logical network as Windows Home Server.

- Make sure any firewall software on your home computer is not blocking access to Windows Home Server.
- If your computer is part of a corporate network (for example, a corporate laptop), check with the corporate network administrator about the IPsec policy. This may block access from the corporate computer to Windows Home Server.

Note: Go to http://www.lenovo.com/homeserver for the software upgrade.

Post error code for the system state LED indicator

When the HDD state LED blinks in red, this indicates that the system state is error. The post error code description is as followed.

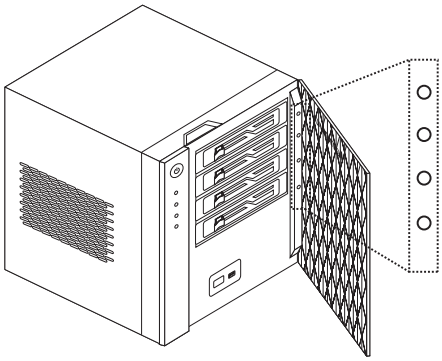

Bit 3	○
Bit 2	○
Bit 1	○
Bit 0	○

● The black circle indicates that the LED is blinking red.

Error code

Bit 3	○	○	○	○	○	○
Bit 2	○	○	○	●	●	●
Bit 1	○	●	●	○	○	●
Bit 0	●	○	●	○	●	○
	1	2	3	4	5	6

31038690B_D400_UG_EN_V1.0.indd 58 2009.7.8 4:28:31 PM

Error code description

1	SATA controller failure
2	USB controller failure
3	LAN controller failure
4	FAN failure
5	Memory failure
6	Boot device not found

31038690B_D400_UG_EN_V1.0.indd 59 2009.7.8 4:28:31 PM

31038690B_D400_UG_EN_V1.0.indd 60 2009.7.8 4:28:31 PM