lenovo

Lenovo S435

Hardware Maintenance Manual

Note:

Before using this information and the product it supports, be sure to read the general information under “Notices” on page 77.

First Edition (November 2014)

© Copyright Lenovo 2014. All rights reserved.

LENOVO products, data, computer software, and services have been developed exclusively at private expense and are sold to governmental entities as commercial items as defined by 48 C.F.R. 2.101 with limited and restricted rights to use, reproduction and disclosure.

LIMITED AND RESTRICTED RIGHTS NOTICE: If products, data, computer software, or services are delivered pursuant a General Services Administration “GSA” contract, use, reproduction, or disclosure is subject to restrictions set forth in Contract No. GS-35F-05925.

© 2014 Lenovo

Contents

About this manual iv

Safety information 1
General safety 2
Electrical safety 3
Safety inspection guide 5
Handling devices that are sensitive to electrostatic discharge 6
Grounding requirements 6
Safety notices: multilingual translations 7
Laser compliance statement 14

Important service information 16
Strategy for replacing FRUs 16
Strategy for replacing a hard disk drive 17
Important notice for replacing a system board 17
Important information about replacing RoHS compliant FRUs 18

General checkout 19
What to do first 20
Power system checkout 21
Checking the AC adapter 21
Checking operational charging 21
Checking the battery pack 22

Related service information 23
Restoring the factory contents by using Recovery Disc Set 23
Start Recovery Disc (one disc) 23
Operating System Recovery Disc (one or more discs) 23
Applications and Drivers Recovery Disc (one or more discs) 23
Supplemental Recovery Disc 23
Passwords 24
Power-on password 24
Hard-disk password 24
Supervisor password 24
Power management 25
Screen blank state 25
Putting the computer to sleep or shutting it down 25

Lenovo S435 28
Specifications 28
Status indicators 30
Hotkeys 32
FRU replacement notices 33
Screw notices 33
Removing and replacing an FRU 34
1010 Battery pack 35
1020 Hard disk drive(HDD)/Memory/ Mini PCI Express Card slot compartment cover 36
1030 PCI Express Mini Card for wireless LAN/WAN 37
1040 Hard disk drive 39
1050 DIMM 41
1060 Fan assembly and Heat Sink assembly 42
1070 Keyboard 44
1080 System board 46
1090 LCD unit 50
1100 Speakers, base cover, USB board, power assembly and power board 52
1110 Hinge cover and LCD front bezel 55
1120 LCD panel, LCD cable and hinges 56
1130 Integrated camera 58
Locations 59
Front view 59
Bottom and Right-side view 60
Left-side view 61
Parts list 62
Overall 63
LCD FRUs 67
Keyboard 69
AC adapters 72
Screws 72
Power cords 73

Notices 77
Trademarks 78

About this manual

This manual contains service and reference information for the following Lenovo product:

Lenovo S435

Use this manual to troubleshoot problems.

The manual is divided into the following sections:

- The common sections provide general information, guidelines, and safety information required for servicing computers.
- The product-specific section includes service, reference, and product-specific parts information.

Important:

This manual is intended only for trained servicers who are familiar with Lenovo products. Use this manual to troubleshoot problems effectively.

Before servicing a Lenovo product, make sure to read all the information under "Safety information" on page 1 and "Important service information" on page 16.

Safety information

This chapter presents the following safety information that you need to get familiar with before you service a Lenovo computer:

- "General safety" on page 2
- "Electrical safety" on page 3
- "Safety inspection guide" on page 5
- "Handling devices that are sensitive to electrostatic discharge" on page 6
- "Grounding requirements" on page 6
- "Safety notices: multilingual translations" on page 7
- "Laser compliance statement" on page 14

General safety

Follow these rules below to ensure general safety:

- Observe a good housekeeping in the area where the machines are put during and after the maintenance.
- When lifting any heavy object:
  1. Make sure that you can stand safely without slipping.
  2. Distribute the weight of the object equally between your feet.
  3. Use a slow lifting force. Never move suddenly or twist when you attempt to lift it.
  4. Lift it by standing or pushing up with your leg muscles; this action could avoid the strain from the muscles in your back. Do not attempt to lift any object that weighs more than 16 kg (35 lb) or that you think is too heavy for you.
- Do not perform any action that causes hazards to the customer, or that makes the machine unsafe.
- Before you start the machine, make sure that other service representatives and the customer are not in a hazardous position.
- Please remove covers and other parts in a safe place, away from all personnel, while you are servicing the machine.
- Keep your toolcase away from walk areas so that other people will not trip it over.
- Do not wear loose clothing that can be trapped in the moving parts of the machine. Make sure that your sleeves are fastened or rolled up above your elbows. If your hair is long, fasten it.
- Insert the ends of your necktie or scarf inside clothing or fasten it with the nonconductive clip, about 8 centimeters (3 inches) from the end.
- Do not wear jewelry, chains, metal-frame eyeglasses, or metal fasteners for your clothing.

  Attention: Metal objects are good electrical conductors.
- Wear safety glasses when you are hammering, drilling, soldering, cutting wire, attaching springs, using solvents, or working in any other conditions that may be hazardous to your eyes.
- After service, reinstall all safety shields, guards, labels, and ground wires. Replace any safety device that is worn or defective.
- Reinstall all covers correctly before returning the machine to the customer.
- Fan louvers on the machine help to prevent the overheating of internal components. Do not obstruct fan louvers or cover them with labels or stickers.

Electrical safety

Observe the following rules when working on electrical equipments.

> **Important:**
> Use only approved tools and test equipments. Some hand tools have handles covered with a soft material that does not insulate you when working with live electrical currents.
> Many customers have rubber floor mats near their machines that contain small conductive fibers to decrease electrostatic discharges. Do not use such kind of mat to protect yourself from electrical shock.

- Find the room emergency power-off (EPO) switch, disconnecting switch, or electrical outlet. If an electrical accident occurs, you can then operate the switch or unplug the power cord quickly.
- Do not work alone under hazardous conditions or near the equipment that has hazardous voltages.
- Disconnect all power before:
  - Performing a mechanical inspection
  - Working near power supplies
  - Removing or installing main units
- Before you start to work on the machine, unplug the power cord. If you cannot unplug it, ask the customer to power-off the wall box that supplies power to the machine, and to lock the wall box in the off position.
- If you need to work on a machine that has exposed electrical circuits, observe the following precautions:
  - Ensure that another person, familiar with the power-off controls, is near you.
    Attention: Another person must be there to switch off the power, if necessary.
  - Use only one hand when working with powered-on electrical equipment; keep the other hand in your pocket or behind your back.
    Attention: An electrical shock can occur only when there is a complete circuit. By observing the above rule, you may prevent a current from passing through your body.
  - When using testers, set the controls correctly and use the approved probe leads and accessories for that tester.
  - Stand on suitable rubber mats (obtained locally, if necessary) to insulate you from grounds such as metal floor strips and machine frames.

Observe the special safety precautions when you work with very high voltages; instructions for these precautions are in the safety sections of maintenance information. Be extremely careful when you measure the high voltages.

- Regularly inspect and maintain your electrical hand tools for safe operational condition.
- Do not use worn or broken tools and testers.
- Never assume that power has been disconnected from a circuit. First, check it to make sure that it has been powered off.

- Always look carefully for possible hazards in your work area. Examples of these hazards are moist floors, nongrounded power extension cables, power surges, and missing safety grounds.
- Do not touch live electrical circuits with the reflective surface of a plastic dental mirror. The surface is conductive; such touching can cause personal injury and machine damage.
- Do not service the following parts with the power on when they are removed from their normal operating places in a machine:
  - Power supply units
  - Pumps
  - Blowers and fans
  - Motor generators

  and similar units. (This practice ensures correct grounding of the units.)
- If an electrical accident occurs:
  - Use caution: do not become a victim yourself.
  - Switch off the power.
  - Send the victim to get medical aid.

Safety inspection guide

The purpose of this inspection guide is to assist you in identifying potential unsafe conditions. As each machine was designed and built, required safety items were installed to protect users and service personnel from injury. This guide addresses only those items. You should use good judgment to identify potential safety hazards due to attachment of non-Lenovo features or options not covered by this inspection guide.

If any unsafe conditions are present, you must determine how serious the apparent hazard could be and whether you can continue without first correcting the problem.

Consider these conditions and the safety hazards they present:

- Electrical hazards, especially primary power (primary voltage on the frame can cause serious or fatal electrical shock)
- Explosive hazards, such as a damaged CRT face or a bulging capacitor
- Mechanical hazards, such as loose or missing hardware

To determine whether there are any potential unsafe conditions, use the following checklist at the beginning of every service task. Begin the checks with the power off, and the power cord disconnected.

Checklist:

1. Check exterior covers for damage (loose, broken, or sharp edges).
2. Turn off the computer. Disconnect the power cord.
3. Check the power cord for:
   a. A third-wire ground connector in good condition. Use a meter to measure third-wire ground continuity for 0.1 ohm or less between the external ground pin and the frame ground.
   b. The power cord should be the type specified in the parts list.
   c. Insulation must not be frayed or worn.
4. Check for cracked or bulging batteries.
5. Remove the cover.
6. Check for any obvious non-Lenovo alterations. Use good judgment as to the safety of any non-Lenovo alterations.
7. Check inside the unit for any obvious unsafe conditions, such as metal filings, contamination, water or other liquids, or signs of fire or smoke damage.
8. Check for worn, frayed, or pinched cables.
9. Check that the power-supply cover fasteners (screws or rivets) have not been removed or tampered with.

Handling devices that are sensitive to electrostatic discharge

Any computer part containing transistors or integrated circuits (ICs) should be considered sensitive to electrostatic discharge (ESD). ESD damage can occur when there is a difference in charge between objects. Protect against ESD damage by equalizing the charge so that the machine, the part, the work mat, and the person handling the part are all at the same charge.

Notes:
1. Use product-specific ESD procedures when they exceed the requirements noted here.
2. Make sure that the ESD protective devices you use have been certified (ISO 9000) as fully effective.

When handling ESD-sensitive parts:
- Keep the parts in protective packages until they are inserted into the product.
- Avoid contact with other people.
- Wear a grounded wrist strap against your skin to eliminate static on your body.
- Prevent the part from touching your clothing. Most clothing is insulative and retains a charge even when you are wearing a wrist strap.
- Use the black side of a grounded work mat to provide a static-free work surface. The mat is especially useful when handling ESD-sensitive devices.
- Select a grounding system, such as those listed below, to provide protection that meets the specific service requirement.

Notes:
The use of a grounding system to guard against ESD damage is desirable but not necessary.

  - Attach the ESD ground clip to any frame ground, ground braid, or green-wire ground.
  - When working on a double-insulated or battery-operated system, use an ESD common ground or reference point. You can use coax or connector-outside shells on these systems.
  - Use the round ground prong of the ac plug on ac-operated computers.

Grounding requirements

Electrical grounding of the computer is required for operator safety and correct system function. Proper grounding of the electrical outlet can be verified by a certified electrician.

Safety notices: multilingual translations

The safety notices in this section are provided in English, French, German, Hebrew, Italian, Japanese, and Spanish.

Safety notice 1

Before the computer is powered on after FRU replacement, make sure all screws, springs, and other small parts are in place and are not left loose inside the computer. Verify this by shaking the computer and listening for rattling sounds. Metallic parts or metal flakes can cause electrical shorts.

Avant de remettre l'ordinateur sous tension après remplacement d'une unité en clientèle, vérifiez que tous les ressorts, vis et autres pièces sont bien en place et bien fixées. Pour ce faire, secouez l'unité et assurez-vous qu'aucun bruit suspect ne se produit. Des pièces métalliques ou des copeaux de métal pourraient causer un court-circuit.

Bevor nach einem FRU-Austausch der Computer wieder angeschlossen wird, muß sichergestellt werden, daß keine Schrauben, Federn oder andere Kleinteile fehlen oder im Gehäuse vergessen wurden. Der Computer muß geschüttelt und auf Klappergeräusche geprüft werden. Metallteile oder-splitter können Kurzschlüsse erzeugen.

לפני הפעלת המחשב לאחר החלפת FRU יש לוודא
שכל הברגים, הקפיצים, וחלקים קטנים אחרים נמצאים
במקומם ואינם חופשיים לזוז בתוך המחשב. כדי לוודא
זאת, יש לטלטל את המחשב ולהקשיב לגילוי קולות שקשוק.
חלקי או שבבי מתכת עלולים לגרום לקצרים חשמליים.

Prima di accendere l'elaboratore dopo che é stata effettuata la sostituzione di una FRU, accertarsi che tutte le viti, le molle e tutte le altri parti di piccole dimensioni siano nella corretta posizione e non siano sparse all'interno dell'elaboratore. Verificare ciò scuotendo l'elaboratore e prestando attenzione ad eventuali rumori; eventuali parti o pezzetti metallici possono provocare cortocircuiti pericolosi.

FRU の交換後、コンピュータの電源を入れる前に、ねじ、バネ、その他の小さな部品がすべて正しい位置にあり、またコンピュータの内部で緩んでいないことを確認してください。
これを確認するには、コンピュータを振って、カチャカチャと音がしないか確かめます。金属部品や金属破片はショートの原因になることがあります。

Antes de encender el sistema despues de sustituir una FRU, compruebe que todos los tornillos, muelles y demás piezas pequeñas se encuentran en su sitio y no se encuentran sueltas dentro del sistema. Compruébelo agitando el sistema y escuchando los posibles ruidos que provocarían. Las piezas metálicas pueden causar cortocircuitos eléctricos.

Safety notice 2

⚠ DANGER

Some standby batteries contain a small amount of nickel and cadmium. Do not disassemble a standby battery, recharge it, throw it into fire or water, or short-circuit it. Dispose of the battery as required by local ordinances or regulations. Use only the battery in the appropriate parts listing. Use of an incorrect battery can result in ignition or explosion of the battery.

Certaines batteries de secours contiennent du nickel et du cadmium. Ne les démontez pas, ne les rechargez pas, ne les exposez ni au feu ni à l'eau. Ne les mettez pas en court-circuit. Pour les mettre au rebut, conformez-vous à la réglementation en vigueur. Lorsque vous remplacez la pile de sauvegarde ou celle de l'horloge temps réel, veillez à n'utiliser que les modèles cités dans la liste de pièces détachées adéquate. Une batterie ou une pile inappropriée risque de prendre feu ou d'exploser.

Die Bereitschaftsbatterie, die sich unter dem Diskettenlaufwerk befindet, kann geringe Mengen Nickel und Cadmium enthalten. Sie darf nicht zerlegt, wiederaufgeladen, kurzgeschlossen, oder Feuer oder Wasser ausgesetzt werden. Bei der Entsorgung die örtlichen Bestimmungen für Sondermüll beachten. Beim Ersetzen der Bereitschafts-oder Systembatterie nur Batterien des Typs verwenden, der in der Ersatzteilliste aufgeführt ist. Der Einsatz falscher Batterien kann zu Entzündung oder Explosion führen.

סוללות המתנה מסוימות מכילות כמות קטנה
של ניקל וקדמיום. אין לפרק סוללת המתנה,
לטעון אותה מחדש, להשליך אותה לאש או
למים או לקצר אותה. יש לסלק את הסוללה
כנדרש על ידי התקנות והחוקים המקומיים. יש
להשתמש רק בסוללה המופיעה ברשימת החלקים
המתאימה. שימוש בסוללה לא מתאימה עלול
לגרום להצתה או התפוצצות של הסוללה.

Alcune batterie di riserva contengono una piccola quantità di nichel e cadmio. Non smontarle, ricaricarle, gettarle nel fuoco o nell'acqua né cortocircuitarle. Smaltirle secondo la normativa in vigore (DPR 915/82, successive disposizioni e disposizioni locali). Quando si sostituisce la batteria dell'RTC (real time clock) o la batteria di supporto, utilizzare soltanto i tipi inseriti nell'appropriato Catalogo parti. L'impiego di una batteria non adatta potrebbe determinare l'incendio o l'esplosione della batteria stessa.

予備バッテリーの中には少量のニッケルとカドミウムが含まれているものがあります。したがって、予備バッテリーの分解、再充電、火または水の中への投棄、またはショートさせることは決して行わないでください。バッテリーを廃棄する場合は地方自治体の条例に従ってください。適切なパーツ・リストにあるバッテリーだけを使用してください。誤ったバッテリーを使用すると、バッテリーが発火したり、爆発したりすることがあります。

Algunas baterías de reserva contienen una pequeña cantidad de níquel y cadmio. No las desmonte, ni recargue, ni las eche al fuego o al agua ni las cortocircuite. Deséchelas tal como dispone la normativa local. Utilice sólo baterías que se encuentren en la lista de piezas. La utilización de una batería no apropiada puede provocar la ignición o explosión de la misma.

Safety notice 3

⚠ DANGER

The battery pack contains small amounts of nickel. Do not disassemble it, throw it into fire or water, or short-circuit it. Dispose of the battery pack as required by local ordinances or regulations. Use only the battery in the appropriate parts listing when replacing the battery pack. Use of an incorrect battery can result in ignition or explosion of the battery.

La batterie contient du nickel. Ne la démontez pas, ne l'exposez ni au feu ni à l'eau. Ne la mettez pas en court-circuit. Pour la mettre au rebut, conformez-vous à la réglementation en vigueur. Lorsque vous remplacez la batterie, veillez à n'utiliser que les modèles cités dans la liste de pièces détachées adéquate. En effet, une batterie inappropriée risque de prendre feu ou d'exploser.

Akkus enthalten geringe Mengen von Nickel. Sie dürfen nicht zerlegt, wiederaufgeladen, kurzgeschlossen, oder Feuer oder Wasser ausgesetzt werden. Bei der Entsorgung die örtlichen Bestimmungen für Sondermüll beachten. Beim Ersetzen der Batterie nur Batterien des Typs verwenden, der in der Ersatzteilliste aufgeführt ist. Der Einsatz falscher Batterien kann zu Entzündung oder Explosion führen.

מארז הסוללה מכיל כמות קטנה של ניקל וקדמיום. אין לפרק את מארז הסוללה, להשליך אותו לאש או למים או לקצר אותו. יש לסלק את מארז הסוללה הסוללה כנדרש על ידי התקנות והחוקים המקומיים. יש להשתמש רק בסוללה המופיעה ברשימת החלקים המתאימה בזמן החלפת מארז הסוללה. שימוש בסוללה לא מתאימה עלול לגרום להצתה או התפוצצות של הסוללה.

La batteria contiene piccole quantità di nichel. Non smontarla, gettarla nel fuoco o nell'acqua né cortocircuitarla. Smaltirla secondo la normativa in vigore (DPR 915/82, successive disposizioni e disposizioni locali). Quando si sostituisce la batteria, utilizzare soltanto i tipi inseriti nell'appropriato Catalogo parti. L'impiego di una batteria non adatta potrebbe determinare l'incendio o l'esplosione della batteria stessa.

バッテリー・パックには少量のニッケルが含まれています。バッテリー・パックを分解したり、火または水の中に投げ込んだり、ショートさせないでください。バッテリー・パックの廃棄にあたっては、地方自治体の条例または規則に従ってください。バッテリー・パックを交換するときは、適切なパーツ・リストにあるバッテリーだけを使用してください。誤ったバッテリーを使用すると、バッテリーが発火したり、爆発したりすることがあります。

Las baterías contienen pequeñas cantidades de níquel. No las desmonte, ni recargue, ni las eche al fuego o al agua ni las cortocircuite. Deséchelas tal como dispone la normativa local. Utilice sólo baterías que se encuentren en la lista de piezas al sustituir la batería. La utilización de una batería no apropiada puede provocar la ignición o explosión de la misma.

Safety notice 4

⚠ DANGER

The lithium battery can cause a fire, an explosion, or a severe burn. Do not recharge it, remove its polarized connector, disassemble it, heat it above 100°C (212°F), incinerate it, or expose its cell contents to water. Dispose of the battery as required by local ordinances or regulations. Use only the battery in the appropriate parts listing. Use of an incorrect battery can result in ignition or explosion of the battery.

La pile de sauvegarde contient du lithium. Elle présente des risques d'incendie, d'explosion ou de brûlures graves. Ne la rechargez pas, ne retirez pas son connecteur polarisé et ne la démontez pas. Ne l'exposez pas à une temperature supérieure à 100°C, ne la faites pas brûler et n'en exposez pas le contenu à l'eau. Mettez la pile au rebut conformément à la réglementation en vigueur. Une pile inappropriée risque de prendre feu ou d'exploser.

Die Systembatterie ist eine Lithiumbatterie. Sie kann sich entzünden, explodieren oder schwere Verbrennungen hervorrufen. Batterien dieses Typs dürfen nicht aufgeladen, zerlegt, über 100 C erhitzt oder verbrannt werden. Auch darf ihr Inhalt nicht mit Wasser in Verbindung gebracht oder der zur richtigen Polung angebrachte Verbindungsstecker entfernt werden. Bei der Entsorgung die örtlichen Bestimmungen für Sondermüll beachten. Beim Ersetzen der Batterie nur Batterien des Typs verwenden, der in der Ersatzteilliste aufgeführt ist. Der Einsatz falscher Batterien kann zu Entzündung oder Explosion führen.

סוללת הליתיום עלולה לגרום לשריפה, להתפוצצות או
לכוויות קשות. אין לטענן אותה מחדש, לסלק את המחבר
המקוטב שלה, לפרק אותה או לחמם אותה לטמפרטורה
העולה על 100 מעלות צלזיוס. אין לשרוף את הסוללה ואין
לחשוף את תוכן התא למים. יש לסלק את הסוללה כנדרש
בתקנות ובחוקים המקומיים. יש להשתמש רק בסוללה
המופיעה ברשימת החלקים המתאימים. שימוש בסוללה
אחרת עלול לגרום לסכנת שריפה או התפוצצות.

La batteria di supporto e una batteria al litio e puo incendiarsi, esplodere o procurare gravi ustioni. Evitare di ricaricarla, smontarne il connettore polarizzato, smontarla, riscaldarla ad una temperatura superiore ai 100 gradi centigradi, incendiarla o gettarla in acqua. Smaltirla secondo la normativa in vigore (DPR 915/82, successive disposizioni e disposizioni locali). L'impiego di una batteria non adatta potrebbe determinare l'incendio o l'esplosione della batteria stessa.

リチウム・バッテリーは、火災、爆発、または重症のやけどを引き起こすことがあります。バックアップ・バッテリーの充電、その極性コネクターの取り外し、バッテリー本体の分解、
100 ℃ (212 °F) 以上への加熱、焼却、電池の中身を水に浸すことはしないでください。バッテリーを廃棄する場合は地方自治体の条例に従ってください。適切なパーツ・リストにあるバッテリーだけを使用してください。誤ったバッテリーを使用すると、バッテリーが発火したり、爆発したりすることがあります。

La batería de repuesto es una batería de litio y puede provocar incendios, explosiones o quemaduras graves. No la recargue, ni quite el conector polarizado, ni la desmonte, ni caliente por encima de los 100°C (212°F), ni la incinere ni exponga el contenido de sus celdas al agua. Deséchela tal como dispone la normativa local.

Safety notice 5

If the LCD breaks and the fluid from inside the LCD gets into your eyes or on your hands, immediately wash the affected areas with water at least for 15 minutes. Seek medical care if any symptoms caused by the fluid are present after washing.

Si le panneau d'affichage à cristaux liquides se brise et que vous recevez dans les yeux ou sur les mains une partie du fluide, rincez-les abondamment pendant au moins quinze minutes. Consultez un médecin si des symptômes persistent après le lavage.

Die Leuchtstoffröhre im LCD-Bildschirm enthält Quecksilber. Bei der Entsorgung die örtlichen Bestimmungen für Sondermüll beachten. Der LCD-Bildschirm besteht aus Glas und kann zerbrechen, wenn er unsachgemäß behandelt wird oder der Computer auf den Boden fällt. Wenn der Bildschirm beschädigt ist und die darin befindliche Flüssigkeit in Kontakt mit Haut und Augen gerät, sollten die betroffenen Stellen mindestens 15 Minuten mit Wasser abgespült und bei Beschwerden anschließend ein Arzt aufgesucht werden.

אם מסך הגביש הנוזלי (LCD) נשבר והנוזל מתוך המסך בא במגע עם עיניכם או ידיכם, שטפו את האזורים הנגועים מיד במים במשך 15 דקות לפחות. פנו לקבלת עזרה רפואית אם תסמינים הנובעים מהמגע עם הנוזל נמשכים לאחר השטיפה.

Nel caso che caso l'LCD si dovesse rompere ed il liquido in esso contenuto entrasse in contatto con gli occhi o le mani, lavare immediatamente le parti interessate con acqua corrente per almeno 15 minuti; poi consultare un medico se i sintomi dovessero permanere.

LCD が破損し、 LCD の中の液体が目に入ったり、手に触れたりした場合は、液体が触れた部分を少なくとも 15 分間洗い流してください。洗い流した後に、液体によって何らかの症状が現れた場合は、医師の治療を受けてください。

Si la LCD se rompe y el fluido de su interior entra en contacto con sus ojos o sus manos, lave inmediatamente las áreas afectadas con agua durante 15 minutos como mínimo. Obtenga atención medica si se presenta algún síntoma del fluido despues de lavarse.

Safety notice 6

⚠ DANGER

To avoid shock, do not remove the plastic cover that protects the lower part of the inverter card.

Afin d'éviter tout risque de choc électrique, ne retirez pas le cache en plastique protégeant la partie inférieure de la carte d'alimentation.

Aus Sicherheitsgründen die Kunststoffabdeckung, die den unteren Teil der Spannungswandlerplatine umgibt, nicht entfernen.

כדי למנוע התחשמלות, אין להסיר את מכסה הפלסטיק
המגן על חלקו התחתון של הכרטיס ההפוך.

Per evitare scosse elettriche, non rimuovere la copertura in plastica che avvolge la parte inferiore della scheda invertitore.

感電を防ぐため、インバーター・カードの下部を保護しているプラスチック・カバーを外さないでください。

Para evitar descargas, no quite la cubierta de plástico que rodea la parte baja de la tarjeta invertida.

Safety notice 7

⚠ DANGER

Though the main batteries have low voltage, a shorted or grounded battery can produce enough current to burn personnel or combustible materials.

Bien que le voltage des batteries principales soit peu élevé, le court-circuit ou la mise à la masse d'une batterie peut produire suffisamment de courant pour brûler des matériaux combustibles ou causer des brûlures corporelles graves.

Obwohl Hauptbatterien eine niedrige Spannung haben, können sie doch bei Kurzschluß oder Erdung genug Strom abgeben, um brennbare Materialien zu entzünden oder Verletzungen bei Personen hervorzurufen.

אף שהסוללות הראשיות הן בעלות מתח נמוך, סוללה
מקוצרת או מוארקת עלולה להפיק זרם מספיק לגרימת
כוויות או להצתת חומרים דליקים.

Sebbene le batterie di alimentazione siano a basso voltaggio, una batteria in corto circuito o a massa può fornire corrente sufficiente da bruciare materiali combustibili o provocare ustioni ai tecnici di manutenzione.

メイン・バッテリーの電圧は低くても、ショートしたり、接地したバッテリーが、作業者にやけどを負わせたり、可燃物を燃やすだけの電流を発生させる場合があります。

Aunque las baterías principales tienen un voltaje bajo, una batería cortocircuitada o con contacto a tierra puede producir la corriente suficiente como para quemar material combustible o provocar quemaduras en el personal.

Safety notice 8

⚠ DANGER

Before removing any FRU, turn off the computer, unplug all power cords from electrical outlets, remove the battery pack, and then disconnect any interconnecting cables.

Avant de retirer une unité remplaçable en clientèle, mettez le système hors tension, débranchez tous les cordons d'alimentation des socles de prise de courant, retirez la batterie et déconnectez tous les cordons d'interface.

Die Stromzufuhr muß abgeschaltet, alle Stromkabel aus der Steckdose gezogen, der Akku entfernt und alle Verbindungskabel abgenommen sein, bevor eine FRU entfernt wird.

לפני סילוק FRU כלשהו, יש לכבות את המחשב,
לנתק את כל כבלי החשמל משקעי החשמל, להוציא
את מארז הסוללה, ואז לנתק כבלי חיבור אחרים
אם יש כאלה.

Prima di rimuovere qualsiasi FRU, spegnere il sistema, scollegare dalle prese elettriche tutti i cavi di alimentazione, rimuovere la batteria e poi scollegare i cavi di interconnessione.

FRU を取り外す前に、 ThinkPad の電源を切って、すべての電源コードをコンセントから外してください。次に、バッテリー・パックを外し、相互接続ケーブルを外してください。

Antes de quitar una FRU, apague el sistema, desenchufe todos los cables de las tomas de corriente eléctrica, quite la batería y, a continuación, desconecte cualquier cable de conexión entre dispositivos.

Laser compliance statement

Some models of Lenovo computer are equipped from the factory with an optical storage device such as a CD-ROM drive or a DVD-ROM drive. Such devices are also sold separately as options. If one of these drives is installed, it is certified in the U.S. to conform to the requirements of the Department of Health and Human Services 21 Code of Federal Regulations (DHHS 21 CFR) Subchapter J for Class 1 laser products. Elsewhere, the drive is certified to conform to the requirements of the International Electrotechnical Commission (IEC) 825 and CENELEC EN 60 825 for Class 1 laser products.

If a CD-ROM drive, a DVD-ROM drive, or another laser device is installed, note the following:

⚠ CAUTION

Use of controls or adjustments or performance of procedures other than those specified herein might result in hazardous radiation exposure.

O uso de controles, ajustes ou desempenho de procedimentos diferentes daqueles aqui especificados pode resultar em perigosa exposição à radiação.

凡未在这里指明的任何控制用法、调整、行为，
都会导致严重后果。

Pour éviter tout risque d'exposition au rayon laser, respectez les consignes de réglage et d'utilisation des commandes, ainsi que les procédures décrites.

Werden Steuer- und Einstellelemente anders als hier festgesetzt verwendet, kann gefährliche Laserstrahlung auftreten.

Az itt előírt eljárásoktól, beállításoktól és vezérlésektől eltérni a lézersugárzás veszélye miatt kockázatos !

L'utilizzo di controlli, regolazioni o l'esecuzione di procedure diverse da quelle specificate possono provocare l'esposizione a.

Использование элементов настройки и выполнение процедур иных, чем указано здесь, может привести к опасному радиационному облучению.

Použitie kontrôl, úprav alebo iných vykonaní od iných výrobcov, ako je v tomto špecifikované, mohlo by mať za následok nebezpečenstvo vystavenia sa vyžiarovaniu.

本書で指定された内容以外の、お客様による整備、調整、または手順を行った場合、レーザー光の放射の危険があります。

El uso de controles o ajustes o la ejecución de procedimientos distintos de los aquí especificados puede provocar la exposición a radiaciones peligrosas.

Opening the CD-ROM drive, the DVD-ROM drive, or any other optical storage device could result in exposure to hazardous laser radiation. There are no serviceable parts inside those drives. **Do not open**.

A CD-ROM drive, a DVD-ROM drive, or any other storage device installed may contain an embedded Class 3A or Class 3B laser diode. Note the following:

⚠ DANGER

Emits visible and invisible laser radiation when open. Do not stare into the beam, do not view directly with optical instruments, and avoid direct exposure to the beam.

Radiação por raio laser ao abrir. Não olhe fixo no feixe de luz, não olhe diretamente por meio de instrumentos óticos e evite exposição direta com o feixe de luz.

开启时会有激光发射时，请勿盯视激光光束，请勿直接查看
视觉仪器，并且避免直接接触在激光光束之中。

Rayonnement laser si carter ouvert. Évitez de fixer le faisceau, de le regarder directement avec des instruments optiques, ou de vous exposer au rayon.

Laserstrahlung bei geöffnetem Gerät. Nicht direkt oder über optische Instrumente in den Laserstrahl sehen und den Strahlungsbereich meiden.

Kinyitáskor lézersugár ! Ne nézzen bele se szabad szemmel, se optikai eszközökkel. Kerülje a sugárnyalábbal való érintkezést!

Aprendo l'unità vengono emesse radiazioni laser. Non fissare il fascio, non guardarlo direttamente con strumenti ottici e evitare l'esposizione diretta al fascio.

Открывая, берегитесь лазерного излучения.
Не смотрите на луч, не разглядывайте его
с помощью оптических инструментов, а также
избегайте прямого воздействия лазерного луча.

Keď je laserová jednotka otvorená. Vyhnite sa priamemu
pohľadu a nehľadte priamo s optickými nástrojmi do ľúča
a vyhnite sa priamemu vystaveniu ľúčov.

開けるとレーザー光が放射されます。光線を見つめたり、光学機械を使って直接見たりしないでください。

Radiación láser al abrir. No mire fijamente ni examine con instrumental óptico el haz de luz. Evite la exposición directa al haz.

Important service information

This chapter presents the following important service information:

- "Strategy for replacing FRUs" on page 16
  - "Strategy for replacing a hard disk drive" on page 17
  - "Important notice for replacing a system board" on page 17
- "Important information about replacing RoHS compliant FRUs" on page 18

Important:
BIOS and device driver fixes are customer-installable. The BIOS and device drivers are posted on the customer support site:
http://support.lenovo.com.

Strategy for replacing FRUs

Before replacing parts:

Make sure that all software fixes, drivers, and BIOS downloads are installed before replacing any FRUs listed in this manual.

After a system board is replaced, ensure that the latest BIOS is loaded to the system board before completing the service action.

To download software fixes, drivers, and BIOS, follow the steps below:

1. Go to http://support.lenovo.com.
2. Enter the serial number or select a product or use Lenovo smart downloading.
3. Select the BIOS/Driver/Applications and download.
4. Follow the directions on the screen and install the necessary software.

Use the following strategy to prevent unnecessary expense for replacing and servicing FRUs:

- If you are instructed to replace an FRU, but the replacement does not solve the problem, reinstall the original FRU before you continue.
- Some computers have both a processor board and a system board. If you are instructed to replace either of them, and replacing one of them does not solve the problem, reinstall that board, and then replace the other one.
- If an adapter or a device consists of more than one FRU, any of the FRUs may be the cause of the error. Before replacing the adapter or device, remove the FRUs one by one to see if the symptoms change. Replace only the FRU that changed the symptoms.

Attention: The setup configuration on the computer you are servicing may have been customized. Running Automatic Configuration may alter the settings. Note the current configuration settings (using the View Configuration option); then, when service has been completed, verify that those settings remain in effect.

Strategy for replacing a hard disk drive

Always try to run a low-level format before replacing a hard disk drive. This will cause all customer data on the hard disk to be lost. Make sure that the customer has a current backup of the data before performing this action.

Attention: The drive startup sequence in the computer you are servicing may have been changed. Be extremely careful during write operations such as copying, saving, or formatting. If you select an incorrect drive, data or programs can be overwritten.

Important notice for replacing a system board

Some components mounted on a system board are very sensitive. Improper handling can cause damage to those components, and may cause a system malfunction.

Attention: When handling a system board:

- Do not drop the system board or apply any excessive force to it.
- Avoid rough handling of any kind.
- Avoid bending the system board and hard pushing to prevent cracking at each BGA (Ball Grid Array) chipset.

Important information about replacing RoHS compliant FRUs

RoHS, The Restriction of Hazardous Substances in Electrical and Electronic Equipment Directive (2002/95/EC) is a European Union legal requirement affecting the global electronics industry. RoHS requirements must be implemented on Lenovo products placed on the market after June 2006. Products on the market before June 2006 are not required to have RoHS compliant parts. If the original FRU parts are non-compliant, replacement parts can also be non-compliant. In all cases if the original FRU parts are RoHS compliant, the replacement part must also be RoHS compliant.

Note: RoHS and non-RoHS FRU part numbers with the same fit and function are identified with unique FRU part numbers.

Lenovo plans to transit to RoHS compliance well before the implementation date and expects its suppliers to be ready to support Lenovo's requirements and schedule in the EU. Products sold in 2005 and 2006 will contain some RoHS compliant FRUs. The following statement pertains to these products and any product Lenovo produces containing RoHS compliant FRUs.

RoHS compliant FRUs have unique FRU part numbers. Before or after the RoHS implementation date, failed RoHS compliant parts must always be replaced with RoHS compliant ones, so only the FRUs identified as compliant in the system HMM or direct substitutions for those FRUs may be used.

Products marketed before June 2006		Products marketed after June 2006	
Current or original part	**Replacement FRU**	**Current or original part**	**Replacement FRU**
Non-RoHS	Can be Non-RoHS	Must be RoHS	Must be RoHS
Non-RoHS	Can be RoHS		
Non-RoHS	Can sub to RoHS		
RoHS	Must be RoHS		

Note: A direct substitution is a part with a different FRU part number that is automatically shipped by the distribution center at the time of the order.

General checkout

This chapter presents the following information:

- "What to do first" on page 20
- "Power system checkout" on page 21

Before you go to the checkout, make sure to read the following important notes:

Important notes:

- **Only certified trained personnel can service the computer.**
- **Before replacing any FRU, read the entire page on removing and replacing FRUs.**
- **When you replace FRUs, use new nylon-coated screws.**
- **Be extremely careful during such write operations as copying, saving, or formatting.** Drives in the computer that you are servicing sequence might have been altered. If you select an incorrect drive, data or programs might be overwritten.
- **Replace an FRU only with another FRU of the correct model.** When you replace an FRU, make sure that the machine model and the FRU part number are correct by referring to the FRU parts list.
- **An FRU should not be replaced just because of a single, unreproducible failure.** Single failures can occur for a variety of reasons that have nothing to do with a hardware defect, such as cosmic radiation, electrostatic discharge, or software errors. Consider replacing an FRU only when a problem recurs. If you suspect that an FRU is defective, clear the error logs and run the test again. If the error does not recur, do not replace the FRU.
- **Be careful not to replace a nondefective FRU.**

What to do first

When you do return an FRU, you must include the following information in the parts exchange form or parts return form that you attach to it:

1. Name and phone number of servicer
2. Date of service
3. Date on which the machine failed
4. Date of purchase
5. Procedure index and page number in which the failing FRU was detected
6. Failing FRU name and part number
7. Machine type, model number, and serial number
8. Customer's name and address

Note for warranty: During the warranty period, the customer may be responsible for repair costs if the computer damage was caused by misuse, accident, modification, unsuitable physical or operating environment, or improper maintenance by the customer.

The following is a list of some common items that are not covered under warranty and some symptoms that might indicate that the system was subjected to stress beyond normal use.

Before checking problems with the computer, determine whether the damage is covered under the warranty by referring to the following list:

The following are not covered under warranty:

- LCD panel cracked from the application of excessive force or from being dropped
- Scratched (cosmetic) parts
- Distortion, deformation, or discoloration of the cosmetic parts
- Plastic parts, latches, pins, or connectors that have been cracked or broken by excessive force
- Damage caused by liquid spilled into the system
- Damage caused by the improper insertion of a PC Card or the installation of an incompatible card
- Improper disk insertion or use of an optical drive
- Diskette drive damage caused by pressure on the diskette drive cover, foreign material in the drive, or the insertion of a diskette with multiple labels
- Damaged or bent diskette eject button
- Fuses blown by attachment of a nonsupported device
- Forgotten computer password (making the computer unusable)
- Sticky keys caused by spilling a liquid onto the keyboard
- Use of an incorrect AC adapter on laptop products

The following symptoms might indicate damage caused by nonwarranted activities:

- Missing parts might be a symptom of unauthorized service or modification.
- If the spindle of a hard disk drive becomes noisy, it may have been subjected to excessive force, or dropped.

Power system checkout

To verify a symptom, follow the steps below:

1. Turn off the computer.
2. Remove the battery pack.
3. Connect the AC adapter.
4. Make sure that power is supplied when you turn on the computer.
5. Turn off the computer.
6. Disconnect the AC adapter and install the charged battery pack.
7. Make sure that the battery pack supplies power when you turn on the computer.

If you suspect a power problem, see the appropriate one of the following power supply checkouts:

- "Checking the AC adapter" on page 21
- "Checking operational charging" on page 21
- "Checking the battery pack" on page 22

Checking the AC adapter

You are here because the computer fails only when the AC adapter is used.

- If the power-on indicator does not turn on, check the power cord of the AC adapter for correct continuity and installation.
- If the computer does not charge during operation, go to "Checking operational charging".

To check the AC adapter, follow the steps below:

1. Unplug the AC adapter cable from the computer.
2. Measure the output voltage at the plug of the AC adapter cable. See the following figure:

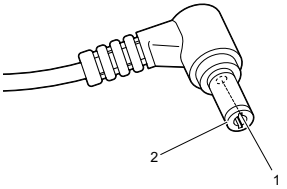

Pin	Voltage (V DC)
1	+20
2	0

Note: Output voltage for the AC adapter pin No. 2 may differ from the one you are servicing.

3. If the voltage is not correct, replace the AC adapter.
4. If the voltage is acceptable, do the following:

- Replace the system board.
- If the problem persists, go to "Lenovo S435" on page 28.

Note: Noise from the AC adapter does not always indicate a defect.

Checking operational charging

To check whether the battery charges properly during operation, use a discharged battery pack or a battery pack that has less than 50% of the total power remaining when installed in the computer.

Perform operational charging. If the battery status indicator or icon does not light on, remove the battery pack and let it return to room temperature. Reinstall the battery pack. If the charge indicator or icon is still off, replace the battery pack.

If the charge indicator still does not light on, replace the system board. Then reinstall the battery pack. If it is still not charged, go to the next section.

Checking the battery pack

Battery charging does not start until the Power Meter shows that less than 95% of the total power remains; under this condition the battery pack can charge to 100% of its capacity. This protects the battery pack from being overcharged or from having a shortened life.

To check your battery, move your cursor to the Power Meter icon in the icon tray of the Windows® taskbar and wait for a moment (but do not click it), and the percentage of battery power remaining is displayed. To get detailed information about the battery, double-click the Power Meter icon.

Note: If the battery pack becomes hot, it may not be able to be charged. Remove it from the computer and leave it at room temperature for a while. After it cools down, reinstall and recharge it.

Related service information

This chapter presents the following information:

- "Restoring the factory contents by using Recovery Disc Set" on page 23
- "Passwords" on page 24
- "Power management" on page 25

Restoring the factory contents by using Recovery Disc Set

When the hard disk drive or solid state drive is replaced because of a failure, no product recovery program is on the new drive. In this case, you must use the *Recovery Disc Set* for the computer. Order the *Recovery Disc Set* and the drive at the same time so that you can recover the new drive with the pre-installed software when they arrive.

The *Recovery Disc Set* consists of the following set of DVDs to restore the computer to the original factory configuration.

Start Recovery Disc (one disc)

This disc is used to format the hard disk drive and initiate the recovery process.

Operating System Recovery Disc (one or more discs)

This disc restores the Microsoft Windows operating system.

Applications and Drivers Recovery Disc (one or more discs)

This disc restores the pre-installed applications and drivers on the computer.

Supplemental Recovery Disc

This disc contains additional content, such as software for specific models and updates to the software that was preloaded on the computer. Not all recovery disc sets come with a *Supplemental Recovery Disc*.

To restore the computer to the original factory configuration using the recovery disc set, do the following:

1. Insert the bootable *Start Recovery Disc* into the optical drive.
2. Start the computer. When the Lenovo logo comes up, immediately press F12; on the boot sequence menu, select the optical drive as the first boot-up device. The computer will boot from the *Start Recovery Disc*. Follow the on-screen instructions to begin the recovery process.
3. Read the license. If you agree with the terms, select **I accept these terms and conditions** and then click **Next**.
4. Insert the **Operating System Recovery Disc** when prompted and click **Yes** to begin the operating system recovery process.
5. Insert the *Applications and Drivers Recovery Disc* when prompted and then click **OK** to begin the applications and drivers recovery process.
6. If you have a *Supplemental Recovery Disc*, insert it when prompted and click **Yes**. If you do not have a *Supplemental Recovery Disc*, click **No**.

7. When all of the data has been copied from the last disc in the set, remove the disc and restart the computer.

> **Note:** The remainder of the recovery process is fully automated and no action is required by you. The computer will restart into the Windows desktop several times and you might experience periods when no activity is apparent on the screen for several minutes at a time. This is normal.

8. When the recovery process is complete, the Welcome to the Microsoft Windows screen is displayed. Follow the instructions on the screen to complete the Windows setup.

Passwords

As many as three passwords may be needed for any Lenovo computer: the power-on password (POP), the hard disk password (HDP), and the supervisor password (SVP).

If any of these passwords has been set, a prompt for it appears on the screen whenever the computer is turned on. The computer does not start until the password is entered.

Exception: If only an SVP is installed, the password prompt does not appear when the operating system is booted.

Power-on password

A power-on password (POP) protects the system from being powered on by an unauthorized person. The password must be entered before an operating system can be booted.

Hard-disk password

There are two hard-disk passwords (HDPs):

+ User HDP - for the user

+ Master HDP - for the system administrator, who can use it to get access to the hard disk drive even if the user has changed the user HDP

Attention: If the user HDP has been forgotten, check whether a master HDP has been set. If it has, it can be used for access to the hard disk drive. If no master HDP is available, neither Lenovo nor Lenovo authorized service technicians provide any services to reset either the user or the master HDP, or to recover data from the hard disk drive. The hard disk drive can be replaced for a scheduled fee.

Supervisor password

A supervisor password (SVP) protects the system information stored in the BIOS Setup Utility. The user must enter the SVP in order to get access to the BIOS Setup Utility and change the system configuration.

Attention: If the SVP has been forgotten and cannot be made available to the servicer, there is no service procedure to reset the password. The system board must be replaced for a scheduled fee.

Power management

Note: Power management modes are not supported for APM operating system.

To reduce power consumption, the computer has three power management modes: screen blank, sleep (standby), and hibernation.

Screen blank state

If the time set on the "Turn off monitor" timer in the operating system expires, the LCD backlight turns off. You can also turn off the LCD backlight by pressing .

To end screen blank state and resume normal operation, press .

Putting the computer to sleep or shutting it down

When you have finished working with your computer, you can put it to sleep or shut it down.

Putting your computer to sleep

If you will be away from your computer for only a short time, put the computer to sleep.

When the computer is in sleep mode, you can quickly wake it to resume use, bypassing the startup process.

To put the computer to sleep, do one of the following:

- Close the display lid.
- Press the power button.
- Open the charms bar and select **Settings**  → **Power**  → **Sleep**.

Note: Wait until the power indicator light starts blinking (indicating that the computer is in sleep mode) before you move your computer. Moving your computer while the hard disk is spinning can damage the hard disk, causing loss of data.

To wake the computer, do one of the following:

- Press any key on the keyboard.

Note: If the computer does not awaken after pressing a key on the keyboard, this means that the computer has entered an enhanced power-saving mode.

- Press the power button.

Shutting down the computer

If you are not going to use your computer for a long time, shut it down. To shut down your computer, do one of the following:

- Open the charms bar and select **Settings** → **Power** → **Shut down**.

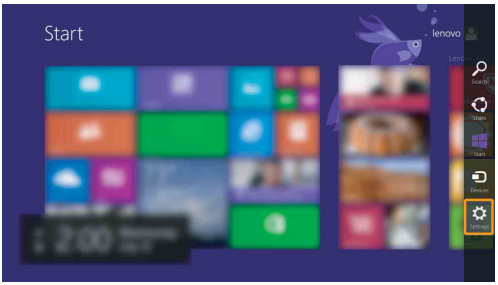

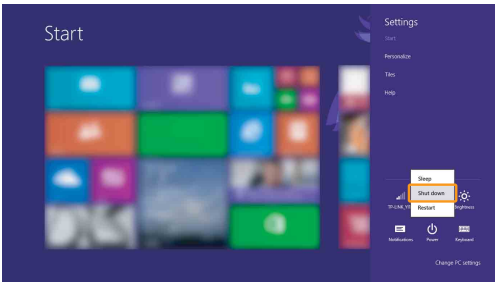

- Right-click the Start button in the lower-left corner and select **Shut down or sign out** → **Shut down**.

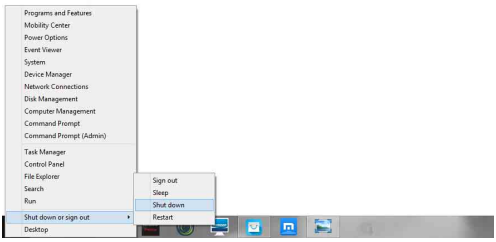

- On the Start screen, click and select **Shut down**.

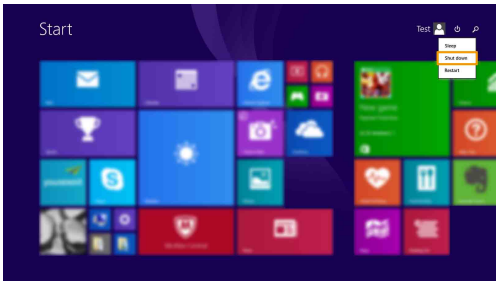

Note: This operation depends on your BIOS settings. Please refer to the actual product.

Lenovo S435

This chapter presents the following product-specific service references and product-specific parts information:

- "Specifications" on page 28
- "Status indicators" on page 30
- "FRU tests" on page 31
- "FRU replacement notices" on page 33
- "Removing and replacing an FRU" on page 34
- "Locations" on page 59
- "Parts list" on page 62

Specifications

The following table lists the specifications of the Lenovo S435:

Table 1. Specifications

Feature	Description
Processor	See the system properties of your computer, you can do this as follows: Click **Control Panel**, then click **Hardware and Sound**, click **Device Manager** under **Devices and Printers** and double click **Processors**.
PCH	No
Display	16:9 (1,366 × 768 pixels)
Standard memory	DDR3L-1333 MHz/1600 MHz 8 GB SODIMM × 1
CMOS RAM	256 bytes
Hard disk drive	2.5-inch, 7.0 mm
Optical drive	NA
SSD	16G, 24G, 32G mSATA

Table 1. Specifications (continued)

Feature	Description
I/O ports	HDMI port × 1
	USB 2.0 × 2, USB 3.0 × 1
	2 in 1 slot × 1 (MMC, SD)
Audio	Combo audio jack × 1 Speaker × 2 Built-in microphone
Video	HDMI port × 1
AC adapter	40 W or 65 W
Pre-installed operating system	Windows 8
Integrated camera	HD/640 × 480 pixels
Battery	Lithium-ion

Status indicators

The system status indicators below show the computer status:

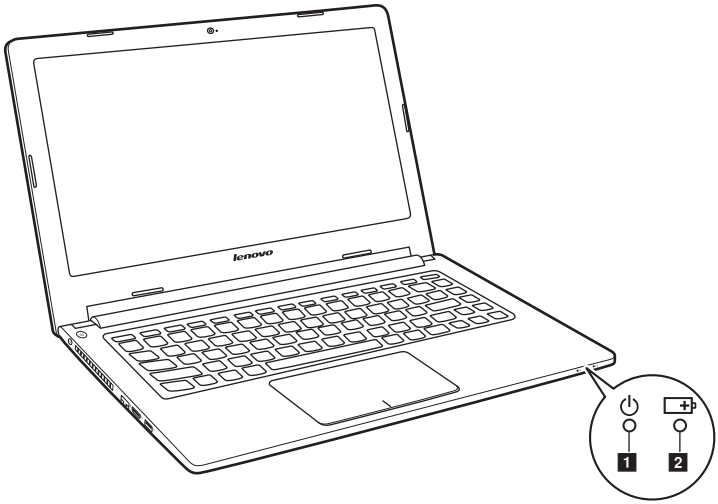

Table 2. Status indicators

No.	Symbol	Indicator	Indicator status	Meaning
1		Power	On (solid white)	The computer is powered on.
			Blinking	The computer is in sleep mode.
			Off	The computer is powered off.
2		Battery	On (solid white)	The battery has more than 20% charge.
			Solid amber	The battery has between 5% and 20% charge.
			Fast blinking amber	The battery has less than 5% charge.
			Slow blinking amber	The battery is being charged. When battery charge reaches 20%, the blinking color changes to white.
			Slow blinking white	The battery has between 20% and 80% charge and is still charging. When the battery reaches 80% charge the light will stop blinking, but charging will continue until the battery is fully charged.
			Off	The battery is detached.

Hotkeys

The hotkeys are located in the function key row of the keyboard.By pressing the appropriate hotkey, you can change system settings instantly.

The following describes the function of each hotkey.

Table 4. Hotkeys

Hotkeys	Description
 :	Mute/Unmute.
 :	Decrease sound volume.
 :	Increase sound volume.
 :	Close active window or program.
 :	Refresh desktop or Web pages.
 :	Enable/Disable the touch pad.
 :	Enable/disable Airplane mode.
 :	Display all currently active apps.
 :	Turn on/off the backlight of the LCD screen.
 :	Open the interface for changing display devices.
 :	Decrease display brightness.
 :	Increase display brightness.

FRU replacement notices

This section presents notices related to removing and replacing parts. Read this section carefully before replacing any FRU.

Screw notices

Loose screws can cause a reliability problem. In the Lenovo computer, this problem is addressed with special nylon-coated screws that have the following characteristics:

- They maintain tight connections.
- They do not easily come loose, even with shock or vibration.
- They are harder to tighten.
- Each one should be used only once.

Do the following when you service this machine:

- Keep the screw kit in your tool bag.
- Remove screws carefully for reuse.
- Use a torque screwdriver if you have one.

Tighten screws as follows:

- **Plastic to plastic**

  Turn an additional 90° after the screw head touches the surface of the plastic part:

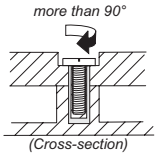

- **Logic card to plastic**

  Turn an additional 180° after the screw head touches the surface of the logic card:

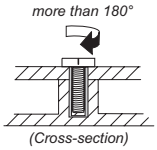

- **Torque driver**

  If you have a torque screwdriver , refer to the “Torque” column for each step.
- Make sure that you use the correct screws. If you have a torque screwdriver, tighten all screws firmly to the torque shown in the table. **Never use a screw that you removed. Use a new one. Make sure that all screws are tightened firmly**.
- Ensure torque screwdrivers are calibrated correctly following country specifications.

Removing and replacing an FRU

This section presents exploded figures with the instructions to indicate how to remove and replace the FRU. Make sure to observe the following general rules:

1. Do not attempt to service any computer unless you have been trained and certified. An untrained person runs the risk of damaging parts.
2. Before replacing any FRU, review "FRU replacement notices" on page 33.
3. Begin by removing any FRUs that have to be removed before the failing FRU. Any of such FRUs are listed at the top of the page. Remove them in the order in which they are listed.
4. Follow the correct sequence in the steps to remove the FRU, as given in the figures by the numbers in square callouts.
5. When turning a screw to replace an FRU, turn it in the direction as given by the arrow in the figure.
6. When removing the FRU, move it in the direction as given by the arrow in the figure.
7. To put the new FRU in place, reverse the removal procedures and follow any of the notes that pertain to replacement. For information about connecting and arranging internal cables, see "Locations" on page 59.
8. When replacing an FRU, use the correct screw as shown in the procedures.

> **⚠ DANGER**
> Before removing any FRU, turn off the computer, unplug all power cords from electrical outlets, remove the battery pack, and then disconnect any of the interconnecting cables.

Attention: After replacing an FRU, do not turn on the computer until you have made sure that all screws, springs, and other small parts are in place and none are loose inside the computer. Verify this by shaking the computer gently and listening for rattling sounds. Metallic parts or metal flakes can cause electrical short circuits.

Attention: The system board is sensitive to, and can be damaged by, electrostatic discharge. Before touching it, establish personal grounding by touching a ground point with one hand or using an electrostatic discharge (ESD) strap (P/N 6405959) to remove potential shock reasons.

1010 Battery pack

> ⚠ **DANGER**
> Only use the battery specified in the parts list for your computer. Any other battery could ignite or explode.

Figure 1. Removal steps of battery pack

Unlock the manual battery latch **1**. Slide the spring-loaded latch to the unlocked position to eject the battery pack **2**. Lift up the inner edge of the battery pack, pivoting it on the outer edge **3**. Slide the battery pack in the indicated direction to remove it **4**.

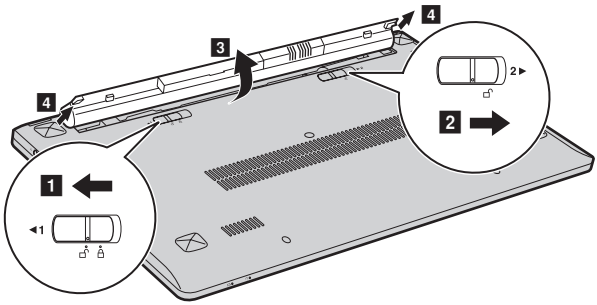

1020 Hard disk drive(HDD)/Memory/Mini PCI Express Card slot compartment cover

For access, remove this FRU:

- "1010 Battery pack" on page 35

Figure 2. Hard disk drive(HDD)/Memory/Mini PCI Express Card slot compartment cover

Open four rubber feet pads with a screw driver in the direction shown by arrows 1, then remove nine screws 2, three screws 3.

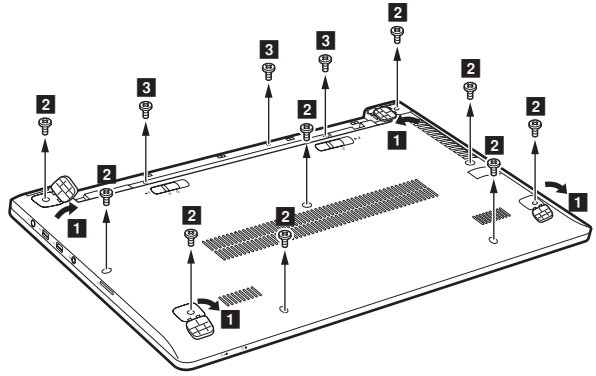

Step	Screw (quantity)	Color	Torque
1	M2.5 × 5 mm, flat-head, nylok-coated (9) M2.0 × 3 mm, flat-head, nylok-coated (3)	Black Silver	3.0+/-0.3 kgfcm 1.85+/-0.15 kgfcm

Open the back cover along the device frame with a flat blade in the direction shown by arrows and then lift the back cover in the direction shown by arrow 4.

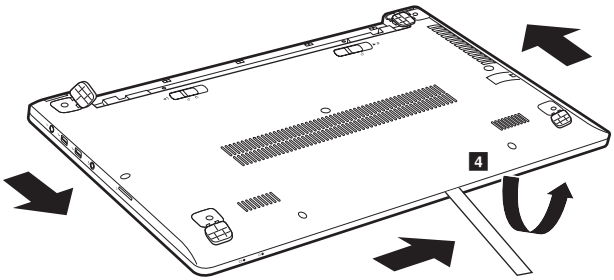

1030 PCI Express Mini Card for wireless LAN/WAN

For access, remove these FRUs in order:

- "1010 Battery pack" on page 35
- "1020 Hard disk drive(HDD)/Memory/Mini PCI Express Card slot compartment cover" on page 36

Figure 3. Removal steps of PCI Express Mini Card for wireless LAN/WAN
Pull the USB board connector slot cover upward as shown by arrow **1**, and detach the USB board cable from the USB board connector in the direction shown by arrow **2**.

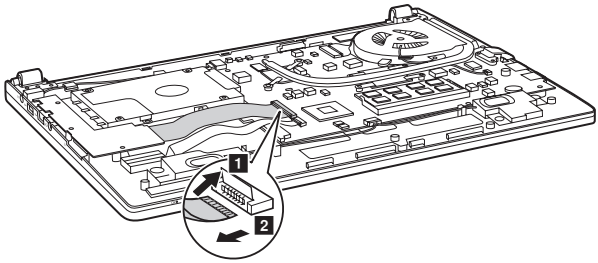

Disconnect the two wireless LAN cables (black,white) **3**, and then remove the screw **4**.

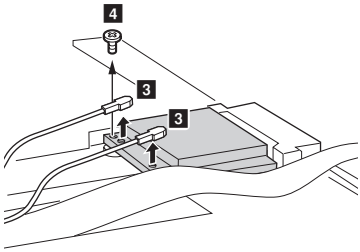

In step **2**, unplug the jacks by using the removal tool antenna RF connector (P/N: 08K7159), or pick up the connectors with your fingers and gently unplug them in the direction shown by arrows.

Notes: wireless LAN card has 2 cables in step **2**.
wireless LAN card in some models may have 3 cables in step **2**.

Step	Screw (quantity)	Color	Torque
2	M2.0 × 3.0 mm, flat-head, nylok-coated (1)	Silver	1.85+/-0.15 kgfcm

Figure 3. Removal steps of PCI Express Mini Card for wireless LAN/WAN (continued)

Remove the card in the direction shown by arrow **5** .

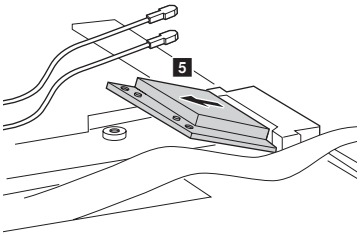

When installing:

- In models with a wireless LAN card that has two antenna connectors, plug the black cable (1st) (MAIN) into the jack labeled **1**, and the white cable (2nd) (AUX) into jack labeled **2** on the card.
- In models with a wireless LAN card that has three antenna connectors, plug the black cable (1st) (MAIN) into the jack labeled **1**, the grey cable (3rd) into jack labeled **3**, and the white cable (2nd) (AUX) into jack labeled **2** on the card.

1040 Hard disk drive

For access, remove these FRUs in order:

- "1010 Battery pack" on page 35
- "1020 Hard disk drive(HDD)/Memory/Mini PCI Express Card slot compartment cover" on page 36
- "1030 PCI Express Mini Card for wireless LAN/WAN" on page 37

Attention:

- **Do not drop the hard disk drive or apply any physical shock to it.** The hard disk drive is sensitive to physical shock. Improper handling can cause damages and permanent loss of data.
- Before removing the drive, suggest the customer to backup all the information on it if possible.
- Never remove the drive while the system is operating or is in suspend mode.

Figure 4. Removal steps of hard disk drive

Remove the frame fixing screws **1** .

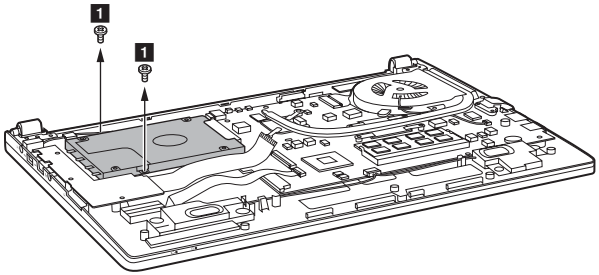

Step	Screw (quantity)	Color	Torque
1	M2 × 3 mm, flat-head, nylok-coated (2)	Silver	1.85+/-0.15 kgfcm

Push the hard disk drive in the direction shown by arrow **2** . Take out the hard disk drive secured in a metal frame.

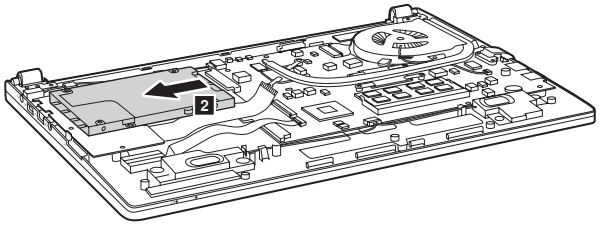

Figure 4. Removal steps of hard disk drive (continued)

Remove four screws 3 and detach the metal frame from the hard disk drive.

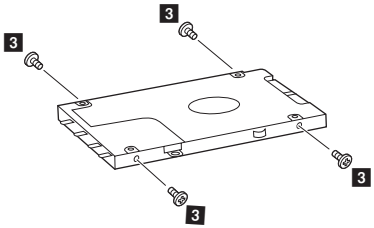

Step	Screw (quantity)	Color	Torque
3	M3.0 × 3.0 mm, flat-head, nylok-coated (4)	Silver	3.0+/-0.3 kgfcm

When installing: Make sure that the HDD connector is attached firmly.

1050 DIMM

For access, remove these FRUs in order:

- "1010 Battery pack" on page 35
- "1020 Hard disk drive(HDD)/Memory/Mini PCI Express Card slot compartment cover" on page 36

Figure 5. Removal steps of DIMM

Release the two latches on both edges of the socket at the same time in the direction shown by arrows **1**, and then unplug the DIMM in the direction shown by arrow **2**.

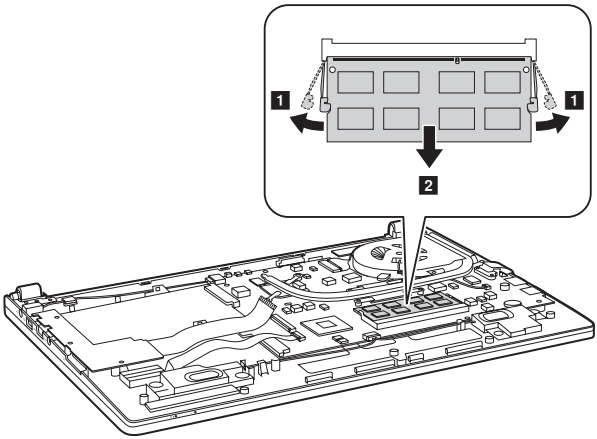

When installing: Insert the notched end of the DIMM into the socket. Push the DIMM firmly, and pivot it until it snaps into the place. Make sure that it is firmly fixed in the slot and difficult to be moved.

1060 Fan assembly and Heat Sink assembly

For access, remove these FRUs in order:

- "1010 Battery pack" on page 35
- "1020 Hard disk drive(HDD)/Memory/Mini PCI Express Card slot compartment cover" on page 36

Figure 6. Removal steps of fan assembly and heat sink assembly

Unplug the fan connector in the direction shown by arrow **1**.

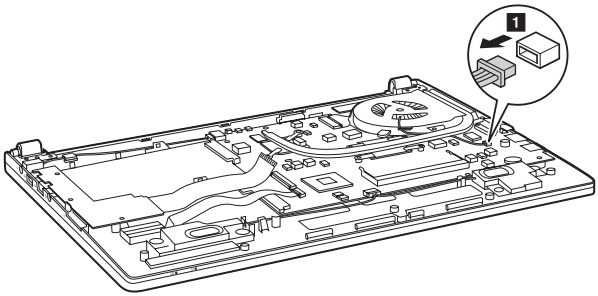

When installing: Make sure that the fan connector is attached firmly to the system board.

Remove six screws **2** and two screws **3**.

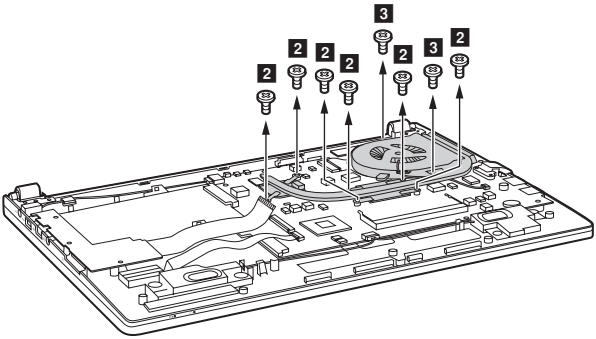

Step	Screw (quantity)	Color	Torque
2	M2 × 3 mm, flat-head, nylok-coated (6) M2 × 5 mm, flat-head, nylok-coated (2)	Silver Black	1.85+/-0.15 kgfcm 1.85+/-0.15 kgfcm

Figure 6. Removal steps of fan assembly and heat sink assembly (continued)

Lift the fan assembly and heat sink assembly in the direction shown by arrow **4**. Be careful not to damage the connector.

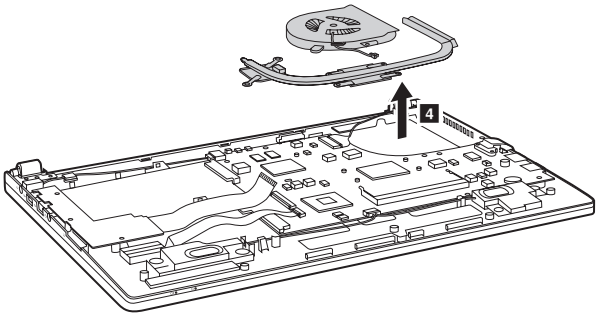

1070 Keyboard

For access, remove these FRUs in order::

- "1010 Battery pack" on page 35
- "1020 Hard disk drive(HDD)/Memory/Mini PCI Express Card slot compartment cover" on page 36
- "1060 Fan assembly and Heat Sink assembly" on page 42

Figure 7. Removal steps of keyboard

Remove screws 1 .

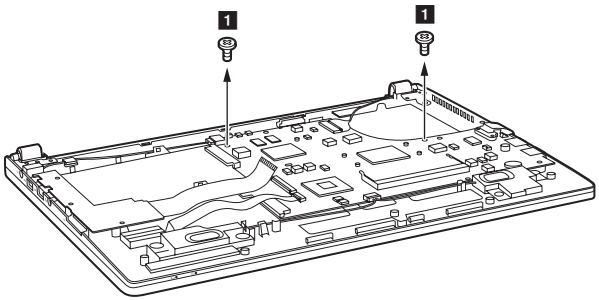

Step	Screw (quantity)	Color	Torque
1	M2.0 × 3.0 mm, flat-head, nylok-coated (2)	Silver	1.85+/-0.15 kgfcm

Push the back of the keyboard in the direction shown by arrow 2 .

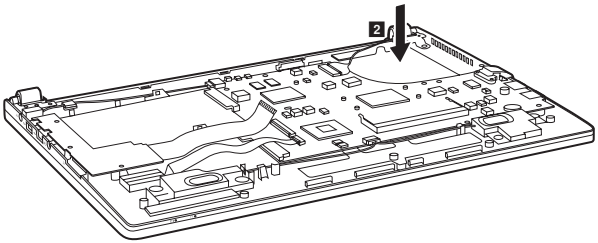

Figure 7. Removal steps of keyboard (continued)

Lift the keyboard a little **3**. Pull the keyboard connector slot cover upward as shown by arrow **4**, and detach the keyboard cable from the keyboard connector in the direction shown by arrow **5**.

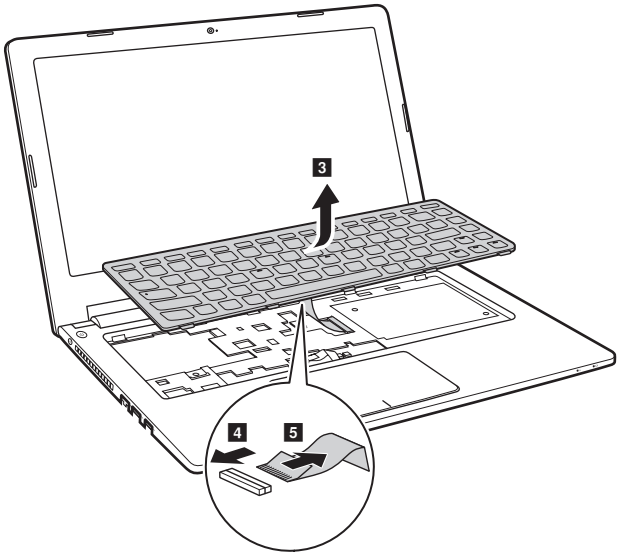

When installing: Make sure that the FPC connector is attached firmly.

1080 System board

Important notices for handling the system board:

When handling the system board, bear the following in mind.

- Be careful not to drop the system board on a bench top that has a hard surface, such as metal, wood, or composite.
- Avoid rough handling of any kind.
- In the whole process, make sure not to drop or stack the system board.
- If you put a system board down, make sure to put it only on a padded surface such as an ESD mat or conductive corrugated material.

For access, remove these FRUs in order:

- "1010 Battery pack" on page 35
- "1020 Hard disk drive(HDD)/Memory/Mini PCI Express Card slot compartment cover" on page 36
- "1030 PCI Express Mini Card for wireless LAN/WAN" on page 37
- "1040 Hard disk drive" on page 39
- "1050 DIMM" on page 41
- "1060 Fan assembly and Heat Sink assembly" on page 42
- "1070 Keyboard" on page 44

Figure 8. Removal steps of system board (continued)

Remove two screws **1** , then remove the RJ-45 door.

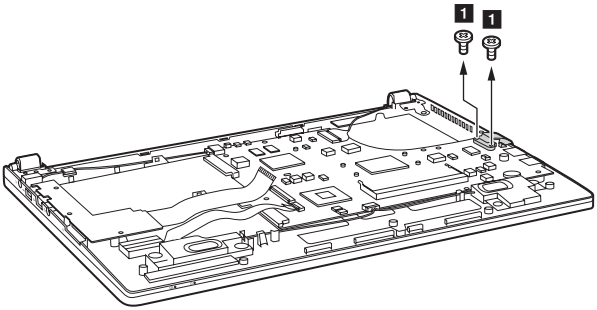

Step	Screw (quantity)	Color	Torque
1	M2 × 3 mm, flat-head, nylok-coated (2)	Silver	1.85+/-0.15 kgfcm

Remove five screws **2** .

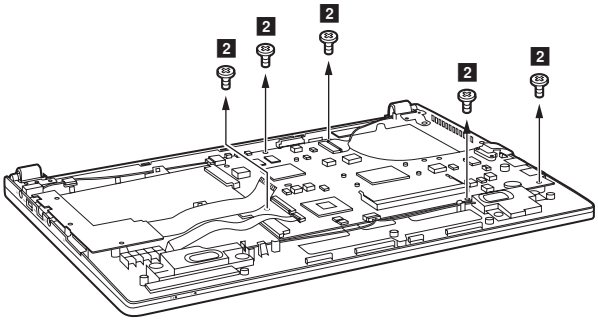

Step	Screw (quantity)	Color	Torque
2	M2 × 3 mm, flat-head, nylok-coated (5)	Silver	1.85+/-0.15 kgfcm

Figure 8. Removal steps of system board (continued)

Unplug DC-IN cable connector in the direction shown by arrow 3 , speakers connector in the direction shown by arrow 4 , disconnect the LCD connector in the direction shown by arrow 5 . Pull the LED indicator board connector slot cover upward as shown by arrow 6 , and detach the LED indicator board cable from the LED indicator board in the direction shown by arrow 7 .

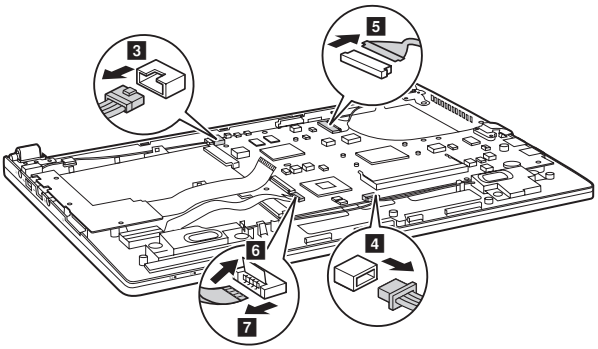

Pull the touch pad board and power board connector slot cover upward as shown by arrow 8 , and detach the touch pad and power board cable from the touch pad and power board connector in the direction shown by arrow 9 .

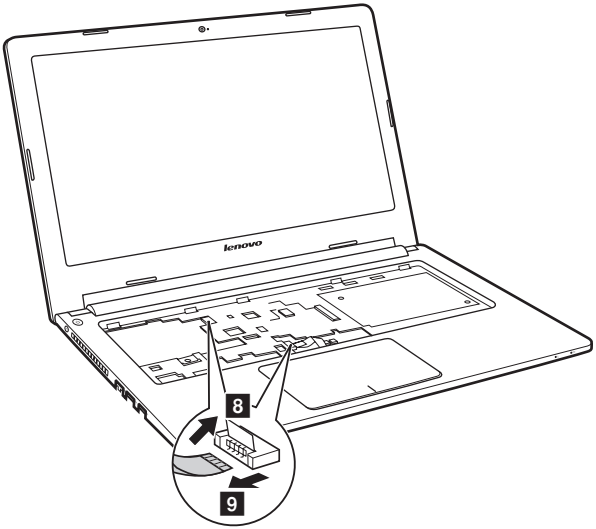

When installing: Make sure that all the connectors are attached firmly.

Figure 8. Removal steps of system board (continued)

Remove the system board in the direction shown by arrow 10.

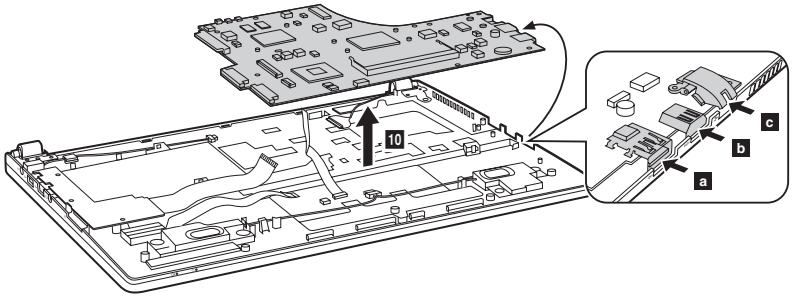

When installing: When attaching the system board to the base cover, adjust the placement of the USB, HDMI, RJ-45 ports as shown in a b c, and make sure that they are attached to the holes on the base cover as shown. Improper placement of those jacks might cause a damage.

1090 LCD unit

For access, remove these FRUs in order:

- "1010 Battery pack" on page 35
- "1020 Hard disk drive(HDD)/Memory/Mini PCI Express Card slot compartment cover" on page 36
- "1030 PCI Express Mini Card for wireless LAN/WAN" on page 37
- "1040 Hard disk drive" on page 39
- "1050 DIMM" on page 41
- "1060 Fan assembly and Heat Sink assembly" on page 42
- "1070 Keyboard" on page 44
- "1080 System board" on page 46

Figure 9. Removal steps of LCD unit

Remove three screws 1 and the screw 2.

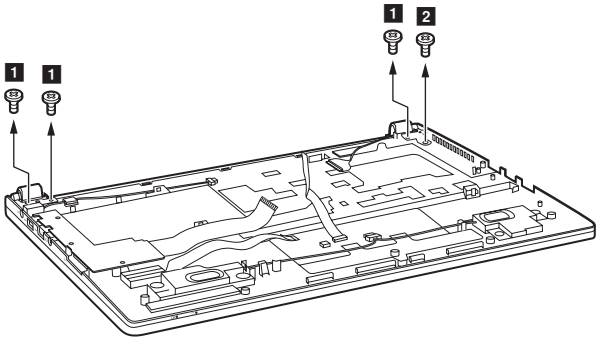

Step	Screw (quantity)	Color	Torque
1	M2 × 2 mm, flat-head, nylok-coated (1) M2.5 × 5 mm, flat-head, nylok-coated (3)	Black Black	1.85+/-0.15 kgfcm 3.0+/-0.3 kgfcm

When installing:

- Route the antenna cables along the cable guides. As you route the cables, make sure that they are not subjected to any tension. Tension could cause the cables to be damaged by the cable guides, or a wire to be broken.
- Make sure that the LCD connector is attached firmly and make sure that you do not pinch the antenna cables when you attach the LCD assembly. Route the LCD cable along the cable guides.

Figure 9. Removal steps of LCD unit (continued)

Detach the LCD unit from the upper case.

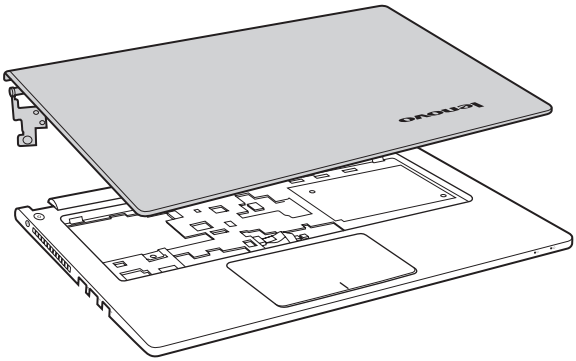

1100 Speakers, base cover, USB board, power assembly and power board

For access, remove these FRUs in order:

- "1010 Battery pack" on page 35
- "1020 Hard disk drive(HDD)/Memory/Mini PCI Express Card slot compartment cover" on page 36
- "1030 PCI Express Mini Card for wireless LAN/WAN" on page 37
- "1040 Hard disk drive" on page 39
- "1050 DIMM" on page 41
- "1060 Fan assembly and Heat Sink assembly" on page 42
- "1070 Keyboard" on page 44
- "1080 System board" on page 46
- "1090 LCD unit" on page 50

Figure 10. Speakers, base cover, USB board, power assembly and power board

Remove four screws **1** , and then remove the speakers in the direction shown by arrow **2** .

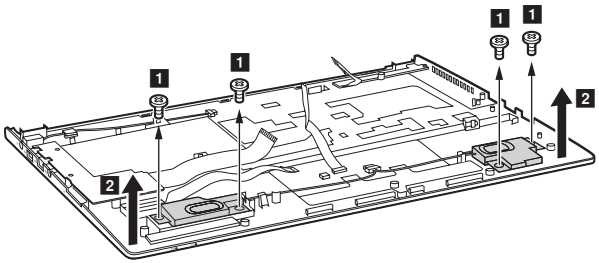

Step	Screw (quantity)	Color	Torque
1	M2 × 2 mm, flat-head, nylok-coated (4)	Black	1.85+/-0.15 kgfcm

Remove the power assembly in the direction shown by arrow **3** .

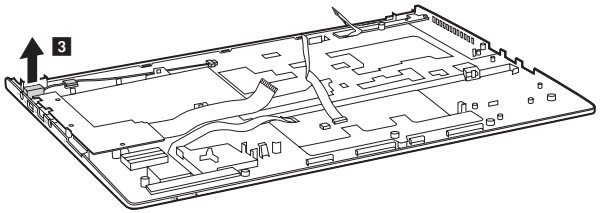

When installing: Make sure that the power connector is attached firmly.

Figure 10. Speakers, base cover, USB board, power assembly and power board (continued)

Remove two screws **4**, and then remove the USB board in the direction shown by arrow **5**.

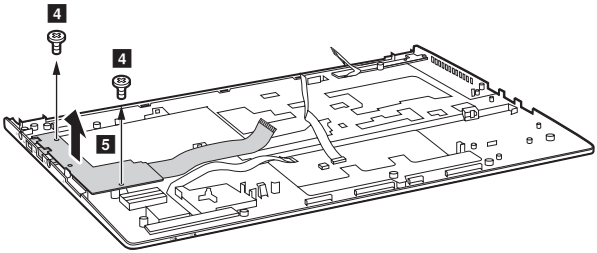

Step	Screw (quantity)	Color	Torque
1	M2 × 3 mm, flat-head, nylok-coated (2)	Silver	1.85+/-0.15 kgfcm

When installing: When attaching the USB board to the base cover, adjust the placement of the USB and headphone jacks as shown , and make sure that both of the USB and the headphone jacks are attached to the holes on the base cover as shown. Improper placement of the jacks might cause a damage.

Remove the screw **6** to lift the power board in the direction shown by arrow **7**.

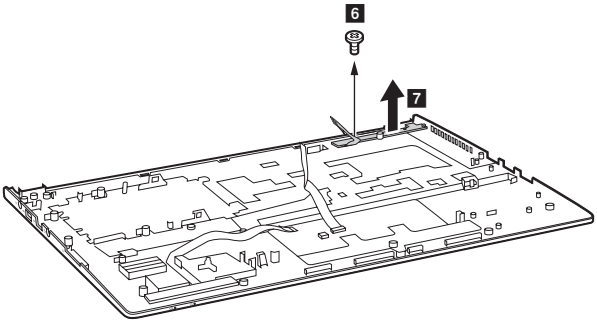

Step	Screw (quantity)	Color	Torque
1	M2 × 3 mm, flat-head, nylok-coated (1)	Black	1.85+/-0.15 kgfcm

Applying labels to the base cover

The new base cover FRU is shipped with a kit containing labels of several kinds. Apply those labels when you replace the base cover. For labels which are not shipped with the new base cover, peel them from the replaced base cover and adhere them to the new one.

Note: If the Certificate of Authenticity (COA) label (b) is attached to a replaced part, return the replaced part to the customer, or provide a letter to the customer stating the original label part number, serial number, and product key.

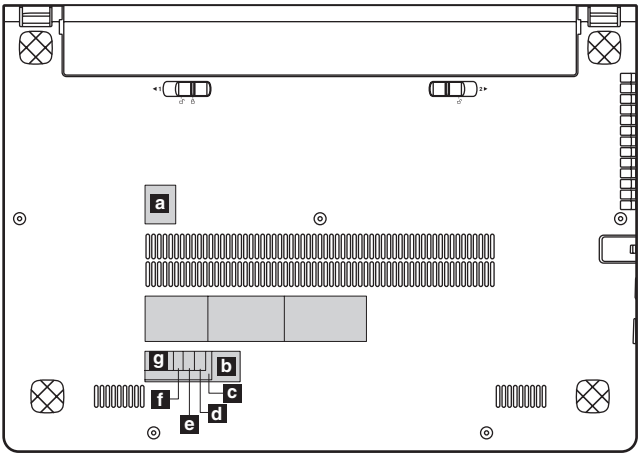

The following letter shows the correct location of each label. Not all labels are attached on the part you are servicing.

- a GML label
- b KR KCC label
- c W/L Label for CA/US/TW/Israel
- d W/L Label for Indonesia
- e W/L Label for South Africa
- f W/L Label for Malaysia
- g W/L Label for Brazil

1110 Hinge cover and LCD front bezel

For access, remove these FRUs in order:

- "1010 Battery pack" on page 35
- "1020 Hard disk drive(HDD)/Memory/Mini PCI Express Card slot compartment cover" on page 36
- "1030 PCI Express Mini Card for wireless LAN/WAN" on page 37
- "1040 Hard disk drive" on page 39
- "1050 DIMM" on page 41
- "1060 Fan assembly and Heat Sink assembly" on page 42
- "1070 Keyboard" on page 44
- "1080 System board" on page 46
- "1090 LCD unit" on page 50
- "1100 Speakers, base cover, USB board, power assembly and power board" on page 52

Figure 11. Removal steps of hinge cover and LCD front bezel

Remove hinge covers in the direction shown by arrows **1**.

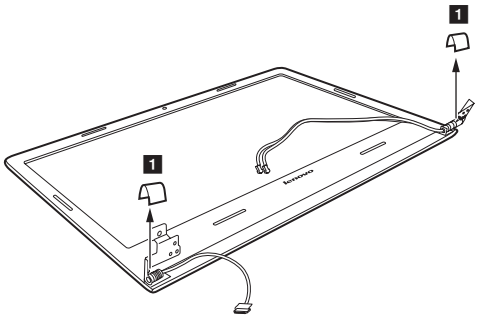

Remove the LCD front bezel in the direction shown by arrows **2**.

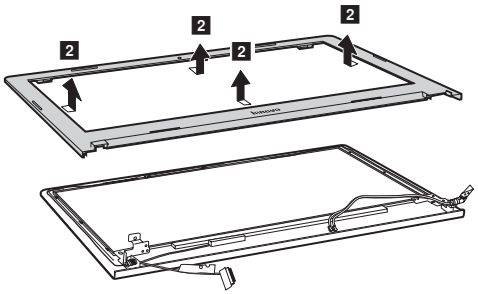

1120 LCD panel, LCD cable and hinges

For access, remove these FRUs in order:

- "1010 Battery pack" on page 35
- "1020 Hard disk drive(HDD)/Memory/Mini PCI Express Card slot compartment cover" on page 36
- "1030 PCI Express Mini Card for wireless LAN/WAN" on page 37
- "1040 Hard disk drive" on page 39
- "1050 DIMM" on page 41
- "1060 Fan assembly and Heat Sink assembly" on page 42
- "1070 Keyboard" on page 44
- "1080 System board" on page 46
- "1090 LCD unit" on page 50
- "1100 Speakers, base cover, USB board, power assembly and power board" on page 52
- "1110 Hinge cover and LCD front bezel" on page 55

Figure 12. LCD panel, LCD cable and hinges

Remove screws **1** .

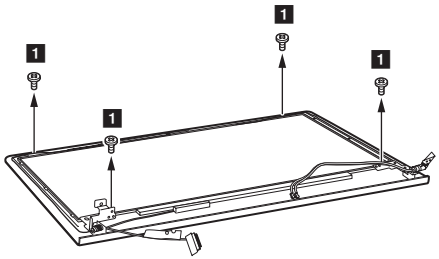

Step	Screw (quantity)	Color	Torque
1	M2.0 x 3 mm, flat-head, nylok-coated(4)	Black	1.85+/-0.15 kgfcm

Figure 12. LCD panel, LCD cable and hinges (continued)

Disconnect the connector **2**, lift the LCD panel in the direction shown by arrow **3**.

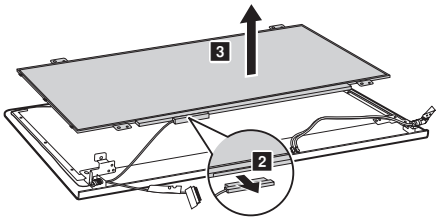

When installing: Make sure that the connector is attached firmly.

Remove four screws **4** and the hinges in the direction shown by arrows **5**.

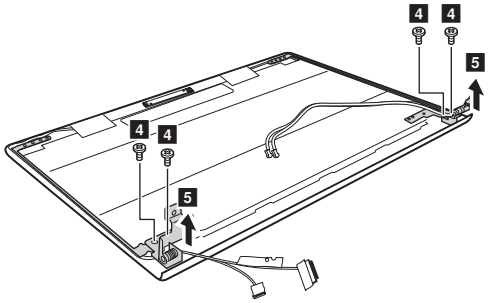

Step	Screw (quantity)	Color	Torque
1	M2.0 x 3 mm, flat-head, nylok-coated(4)	Black	1.85+/-0.15 kgfcm

1130 Integrated camera

For access, remove these FRUs in order:

- "1010 Battery pack" on page 35
- "1020 Hard disk drive(HDD)/Memory/Mini PCI Express Card slot compartment cover" on page 36
- "1030 PCI Express Mini Card for wireless LAN/WAN" on page 37
- "1040 Hard disk drive" on page 39
- "1050 DIMM" on page 41
- "1060 Fan assembly and Heat Sink assembly" on page 42
- "1070 Keyboard" on page 44
- "1080 System board" on page 46
- "1090 LCD unit" on page 50
- "1100 Speakers, base cover, USB board, power assembly and power board" on page 52
- "1110 Hinge cover and LCD front bezel" on page 55
- "1120 LCD panel, LCD cable and hinges" on page 56

Figure 13. Removal steps of integrated camera

Note: The integrated camera is stuck on the top center of the LCD cover.

Unplug the connector **1**, remove the integrated camera from the LCD cover in the direction shown by arrow **2**.

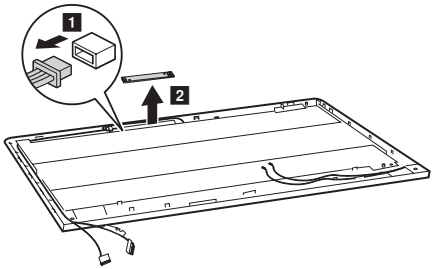

When installing: Stick the integrated camera to the top center of the LCD cover and adjust the placement of it to make sure the connector is attached firmly.

Locations

Front view

1. Integrated camera
2. Wireless module antennas
3. Computer display
4. Power button
5. Touch pad
6. Built-in microphone
7. System status indicators

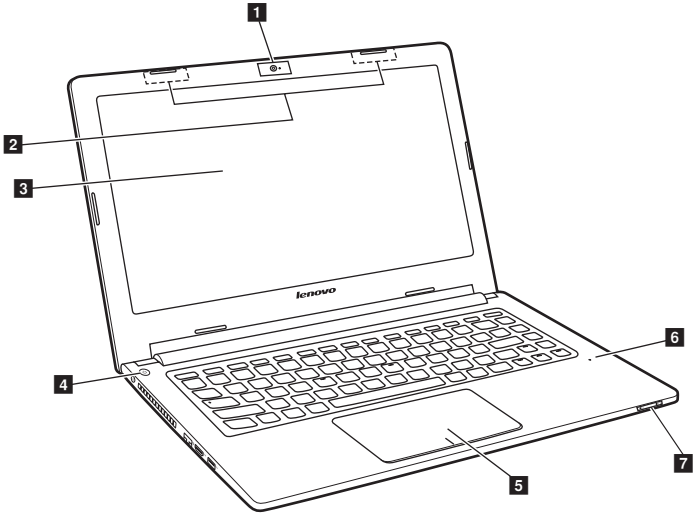

Bottom and Right-side view

1. AC power adapter jack
2. USB 2.0 port
3. Combo audio jack
4. Memory card slot
5. Battery latch -manual
6. Battery latch -spring loaded
7. Battery pack
8. Louvers
9. Speakers

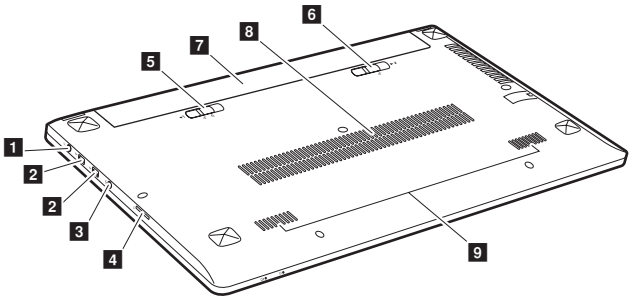

Left-side view

1. Novo button
2. Fan louvers
3. RJ-45 port
4. HDMI port
5. USB 3.0 port

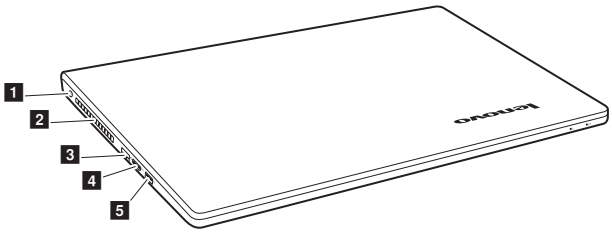

Parts list

This section presents the following service parts:

- "Overall" on page 63
- "LCD FRUs" on page 67
- "Keyboard" on page 69
- "Miscellaneous parts" on page 71
- "AC adapters" on page 72
- "Power cords" on page 73

Notes:
- Each FRU is available for all types or models, unless specific types or models are specified.

Overall

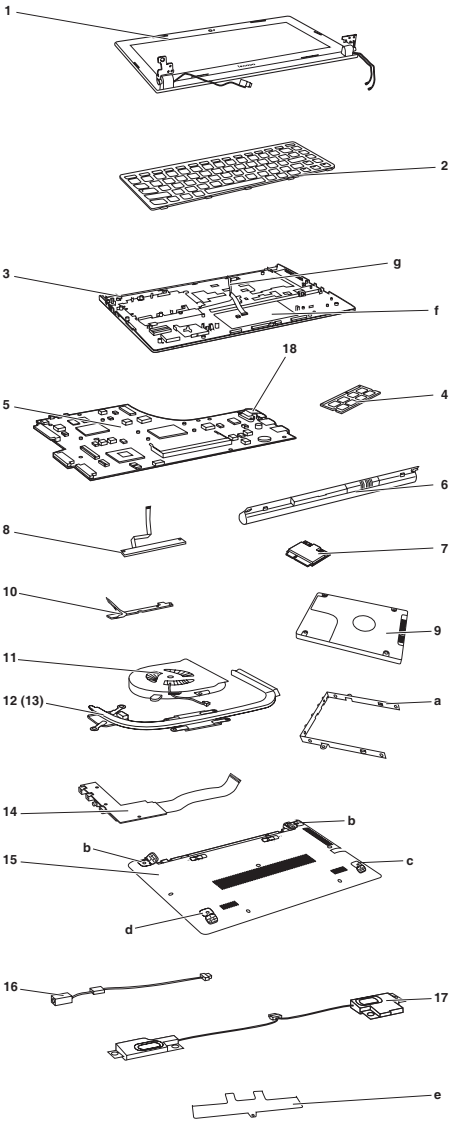

Table 4. Parts list—Overall

No.	FRU	FRU no.	CRU ID
1	LCD unit (see "LCD FRUs" on page 67.)		N
2	Keyboard (see "Keyboard" on page 69.)		N
3	ZIUS7 Upper Case W/TP Silver 15W	90203047	N
3	ZAUSA Upper Case W/TP Sliver 28W	90203322	N
4	DDR3L 1600 2GB, M471B5674QH0-YK0	11202451	N
4	DDR3L 1600 2GB, HMT425S6AFR6A-PB 2GB DDR3L 1600	11201299	N
4	DDR3L 1600 2GB, RMT3170MK58F8F-1600 2GB DDR3L 1600	11202301	N
4	DDR3L 1600 2GB, RMT3190ME76F8F-1600	5M30G04992	N
4	DDR3L 1600 4GB, M471B5173DB0-YK0	11202081	N
4	DDR3L 1600 4GB, HMT451S6BFR8A-PB	11202706	N
4	DDR3L 1600 4GB,RMT3170ME68F9F-1600 4GB DDR3L 1600	11202302	N
4	DDR3L 1600 4GB, MT8KTF51264HZ-1G6E1 4GB DDR3L 1600	11202125	N
4	DDR3L 1600 8GB, M471B1G73DB0-YK0	11202082	N
4	DDR3L 1600 8GB, HMT41GS6BFR8A-PB	11202707	N
4	DDR3L 1600 8GB, RMT3160ME68FAF-1600 8GB DDR3L 1600	11202450	N
4	DDR3L 1600 8GB, MT16KTF1G64HZ-1G6E1 8GB DDR3L 1600	11201304	N
5	MB C S435 NOK UMA E1-6010 10W	5B20H13402	N
5	MB C S435 W8P UMA E1-6010 10W	5B20H13404	N
5	MB C S435 W8S UMA E1-6010 10W	5B20H13407	N
5	MB C S435 NOK DIS A4-6210 15W1G	5B20H13409	N
5	MB C S435 W8P DIS A4-6210 15W1G	5B20H13411	N
5	MB C S435 W8S DIS A4-6210 15W1G	5B20H13413	N
5	MB C S435 NOK DIS A4-6210 15W2G	5B20H13415	N
5	MB C S435 W8P DIS A4-6210 15W2G	5B20H13416	N
5	MB C S435 W8S DIS A4-6210 15W2G	5B20H13384	N
5	MB C S435 NOK UMA A8-6410 15W	5B20H13387	N
5	MB C S435 W8P UMA A8-6410 15W	5B20H13391	N
5	MB C S435 W8S UMA A8-6410 15W	5B20H13394	N
5	MB C S435 NOK DIS A8-6410 15W2G	5B20H13396	N
5	MB C S435 W8P DIS A8-6410 15W2G	5B20H13369	N
5	MB C S435 W8S DIS A8-6410 15W2G	5B20H13371	N
5	MB C S435 NOK DIS E2-6110 15W1G	5B20H13374	N
5	MB C S435 W8P DIS E2-6110 15W1G	5B20H13376	N
5	MB C S435 W8S DIS E2-6110 15W1G	5B20H13378	N
5	MB C S435 NOK UMA A6-6310 15W	5B20H13379	N
5	MB C S435 W8P UMA A6-6310 15W	5B20H13381	N
5	MB C S435 W8S UMA A6-6310 15W	5B20H13406	N
5	MB C S435 NOK DIS A6-6310 15W1G	5B20H13408	N
5	MB C S435 W8P DIS A6-6310 15W1G	5B20H13412	N
5	MB C S435 W8S DIS A6-6310 15W1G	5B20H13414	N

Table 4. Parts list—Overall (continued)

No.	FRU	FRU no.	CRU ID
5	MB C S435 NOK UMA E2-6110 15W	5B20H13385	N
5	MB C S435 W8P UMA E2-6110 15W	5B20H13388	N
5	MB C S435 W8S UMA E2-6110 15W	5B20H13392	N
5	MB C S435 NOK DIS E1-6010 10W1G	5B20H13397	N
5	MB C S435 W8P DIS E1-6010 10W1G	5B20H13398	N
5	MB C S435 W8S DIS E1-6010 10W1G	5B20H13399	N
5	MB C S435 NOK DIS E1-6010 10W2G	5B20H13403	N
5	MB C S435 W8P DIS E1-6010 10W2G	5B20H13405	N
5	MB C S435 W8S DIS E1-6010 10W2G	5B20H13417	N
5	MB C S435 NOK DIS E2-6110 15W2G	5B20H13370	N
5	MB C S435 W8P DIS E2-6110 15W2G	5B20H13373	N
5	MB C S435 W8S DIS E2-6110 15W2G	5B20H13375	N
5	MB C S435 NOK UMA A4-6210 15W	5B20H13380	N
5	MB C S435 W8P UMA A4-6210 15W	5B20H13382	N
5	MB C S435 W8S UMA A4-6210 15W	5B20H13383	N
5	MB C S435 NOK DIS A6-6310 15W2G	5B20H13386	N
5	MB C S435 W8P DIS A6-6310 15W2G	5B20H13390	N
5	MB C S435 W8S DIS A6-6310 15W2G	5B20H13393	N
5	MB C S435 NOK DIS A8-6410 15W1G	5B20H13395	N
5	MB C S435 W8P DIS A8-6410 15W1G	5B20H13400	N
5	MB C S435 W8S DIS A8-6410 15W1G	5B20H13372	N
6	Battery, 4Cell 16650 2200mAh 14.8V 32Wh Black Texture S300S400 SY L12S4Z01 14.8V32Wh 4cell bty	121500104	*
6	Battery, 4Cell 16650 2200mAh 14.8V 32Wh Red S300S400SY L12S4Z01 14.8V32Wh4cellredbty	121500116	*
6	Battery, 4Cell 16650 2200mAh 14.8V 32Wh Brown S310SY L12S4Z01 14.8V32Wh4cellbrownbty	121500195	*
7	WLAN, WiFi 1x1 BGN+BT4.0 Cbt BCM943142HM 1x1BGN+BT4.0 HMC WLAN	20200222	N
7	WLAN, WiFi 1x1 BGN+BT4.0 Liteon WB225 1x1BGN+BT4.0 HMC WLAN	20200224	N
7	WLAN, WiFi 1x1 BGN+BT4.0 Liteon WB335 1x1BGN+BT4.0 HMC WLAN	20200437	N
8	VIUS4 LED Board W/Cable	90000686	N
9	Hard disk drive, 320g 5400rpm(7mm), ST320LT012 6G 7mm 5.4K 320G HDD	16200384	N
9	Hard disk drive, 320g 5400rpm(7mm), WD3200LPCX-24C6HT0 6G 7mm 5.4K 320G HDD	16200551	N
9	Hard disk drive, 320g 5400rpm(7mm), HTS545032A7E660 6G 7mm 5.4K 320G HDD	16200405	N

Table 4. Parts list—Overall (continued)

No.	FRU	FRU no.	CRU ID
9	Hard disk drive, 500G 5400rpm(7mm), ST500LT012 6G 7mm 5.4K 500G HDD	16200383	N
9	Hard disk drive, 500G 5400rpm(7mm), WD5000LPCX-24C6HT0 6G 7mm 5.4K 500G HDD	16200395	N
9	Hard disk drive, 500G 5400rpm(7mm), HTS545050A7E660 6G 7mm 5.4K 500G HDD	16200404	N
9	Hard disk drive, 1TB 5400rpm(7mm), HTS541010A7E630 7mm 5400rpm 1T HDD	16200658	N
9	Hard disk drive, 1TB 5400rpm(7mm), Seagate Angsana 7.0mm 2D(6G) 1TB	16200660	N
9	Hard disk drive, 1TB 5400rpm(7mm), WD10SPCX-24HWST0 6G 7mm 1T HDD	16200554	N
9	SSD, 500 +8G Hybrid(7mm), ST500LM000 6G 7mm 500G+8G SSHD	16200391	N
10	VIUS3 Power Board W/Cable	90000678	N
11	VIUS3 Fan	90201489	N
12	ZAUSA Thermal DIS	90203323	N
13	ZAUSA Thermal Normal UMA	90203324	N
14	IO Board C S435	5C50H13401	N
15	VIUS4 Lower Case Red	90201584	N
15	ZIUS7 Lower Case Black	90203043	N
16	VIUS3 DC-IN Cable	90201492	N
17	VIUS3 Speaker L+R	90201493	N
18	VIUS4 RJ-45 Door Red	90201590	N
18	ZIUS6 RJ-45 Door Black	90203034	N

LCD FRUs

In Lenovo S435, there are following types of LCDs.

- "14.0 -in. HD TFT"

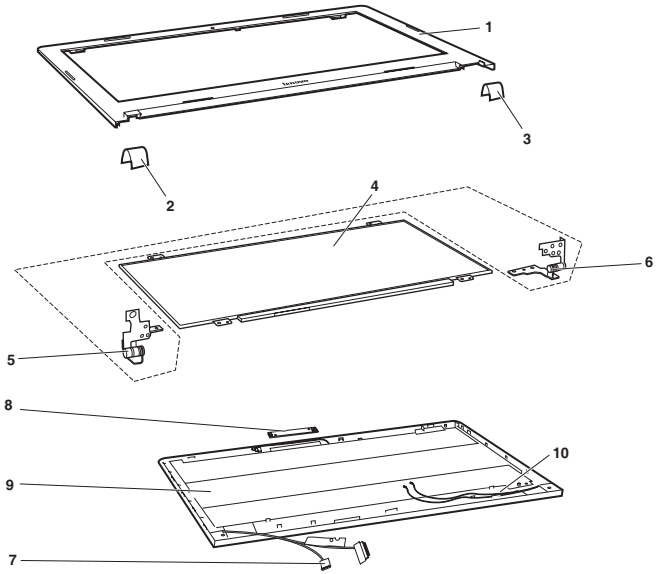

14.0-in. HD TFT

Table 5. Parts list—14.0-in. HD TFT

No.	FRU	FRU no.	CRU ID
1	ZIUS7 LCD Bezel Silver	90203048	N
2	ZIUS7 LCD Hinge Cover Left Silver	90203045	N
3	ZIUS7 LCD Hinge Cover Right Silver	90203046	N
4	Panel, HD-AG eDP 3.0 LGD LP140WHU-TPBJ HD AG S NB	5D10G81620	N
4	Panel, HD-AG eDP 3.0 AUO B140XTN02.E HW0A HD AG S NB	5D10G95364	N
4	Panel, HD-AG eDP 3.0 SDC LTN140AT31-401 HD AG S LED1 NB LCD	18200901	N
4	Panel, HD-AG eDP 3.0 CMI N140BGE-EA3 C2 HD AG S LED1 NB LCD	18201578	N
5	VIUS4 Hinge Left	90201591	N
6	VIUS4 Hinge Right	90201592	N
7	EDP Cable C S435	5C10H13410	N
8	Camera, 0.3M W/O Array MIC BIS BNC1VTTTD 0.3M NB camera	5C20G80277	N
8	Camera C S435 HD 1M	5C20H13418	N
8	Camera C S435 0.3M	5C20H13389	N
9	ZIUS7 LCD Cover Black	90203051	N
9	ZAUSA LCD Cover Red	90203326	N
10	VIUS4 Antenna*2	90201593	N

Keyboard

Table 6. Parts list—Keyboard

Language			P/N	CRU ID
keyboard S435	Chicony	Indian	25213440	N
		Czechoslovakian	25213438	
		Bulgarian	25213439	
		International English	25213437	
		Swiss	25213436	
		Slovenian	25213435	
		Icelandic	25213434	
		Belgian	25213433	
		Four Nordic countries	25213432	
		Hungarian	25213431	
		Hebrew	25213430	
		Greek	25213429	
		Dutch	25213428	
		Japanese	25213427	
		Brazilian	25213426	
		Arabic	25213425	
		German	25213424	
		French	25213423	
		Russian	25213422	
		Traditional Chinese	25213421	
		Korean	25213420	
		Canadian English&French	25213419	
		Latin	25213418	
		Portuguese	25213417	
		Thai	25213416	
		Turkish	25213415	
		Spanish	25213414	
		Italian	25213413	
		U.K. English	25213412	
		English	25213411	
	Sunrex	Indian	25213470	
		Czechoslovakian	25213468	
		Bulgarian	25213469	
		International English	25213467	
		Swiss	25213466	
		Slovenian	25213465	
		Icelandic	25213464	
		Belgian	25213463	
		Four Nordic countries	25213462	
		Hungarian	25213461	
		Hebrew	25213460	
		Greek	25213459	
		Dutch	25213458	
		Brazilian	25213456	

Table 6. Parts list—Keyboard (continued)

Language			P/N	CRU ID
keyboard S435 (continued)	Sunrex (continued)	Arabic	25213455	N
		German	25213454	
		French	25213453	
		Russian	25213452	
		Traditional Chinese	25213451	
		Korean	25213450	
		Canadian English&French	25213449	
		Latin	25213448	
		Portuguese	25213447	
		Thai	25213446	
		Turkish	25213445	
		Spanish	25213444	
		Italian	25213443	
		U.K. English	25213442	
		English	25213441	
	Darfon	Indian	25213500	
		Czechoslovakian	25213498	
		Bulgarian	25213499	
		International English	25213497	
		Swiss	25213496	
		Slovenian	25213495	
		Icelandic	25213494	
		Belgian	25213493	
		Four Nordic countries	25213492	
		Hungarian	25213491	
		Hebrew	25213490	
		Greek	25213489	
		Dutch	25213488	
		Brazilian	25213486	
		Arabic	25213485	
		German	25213484	
		French	25213483	
		Russian	25213482	
		Traditional Chinese	25213481	
		Korean	25213480	
		Canadian English&French	25213479	
		Latin	25213478	
		Portuguese	25213477	
		Thai	25213476	
		Turkish	25213475	
		Spanish	25213474	
		Italian	25213473	
		U.K. English	25213472	
		English	25213471	

Miscellaneous parts

Table 7. Parts list—Miscellaneous parts

FRU	P/N	CRU ID
System miscellaneous parts: • (a) VIUS3 HDD Bracket • (b) VIUS4 Rubber Foot Red Rear • (b) ZIUS7 Rubber Foot Black Rear • (c) VIUS4 Rubber Foot Red Front-Left • (c) ZIUS7 Rubber Foot Black Front-Left • (d) VIUS4 Rubber Foot Red Front-Right • (d) ZIUS7 Rubber Foot Black Front-Right • (e) VIUS3 TP Board Bracket • (f) VIUS5 TP Board Support Bracket • (f) QIWY4 TP Support Bracket	 90201488 90201580 90203037 90201581 90203041 90201582 90203039 90201495 90201813 90200849	N
Cable miscellaneous parts: • (g) VIUS4 TP Board Cable **Note:** Italicized letters in parentheses are references to the exploded view in "Overall" on page 71.	 90201585	N

AC adapters

Table 8. Parts list—3-pin AC adapters

FRU	P/N	CRU ID
40W, Delta ADP-40NH B 20V2A adapter-CCC	36200398	*
40W, Liteon PA-1400-12LC 20V2A adapter-CCC	36200405	*
40W, Chicony LN-A0403A3C20V2A adapter-CCC	36200411	*
65W, Delta ADP-65KH BD 20V3.25A adapter-CCC	36200395	*
65W, Liteon PA-1650-56LC20V3.25A adapter-CCC	36200402	*
65W, Chicony CPA-A065 20V3.25A adapter-CCC	36200413	*

Screws

Table 9. Parts list—screws

FRU	P/N	CRU ID
Screw Pack C S435	5S10H13377	N

Power cords

A Lenovo power cord for a specific country or region is usually available only in that country or region:

Table 10. Parts list—3-pin power cords

Region	P/N	CRU ID
CCC • LINETEK PC323+RVV300/300+LS15 1m	145000600	*
Argentina • LINETEK LS15+H03VV-F+LP39 1m	145000599	
Denmark • LINETEK LS15+H03VV-F+LP-38 1m	145000598	
Switzerland • LINETEK LS15+H03VV-F+LP-37 1m	145000597	
Brazil • LINETEK LS15 H03VV-F LP26A 1m	145000596	
Israel • LINETEK LS15+H03VV-F+LP-41 1m	145000595	
UL • LINETEK LP-30B + SPT-2 + LS15 1m	145000594	
UK • LINETEK LP-61L+ H03VV-F+ LS15 1m	145000593	
Indian • LINETEK PE-361+ H05VV-F+ LS15 1m	145000592	
Italy • LINETEK LS15+H03VV-F+PE-336 1m	145000591	
Korea • LINETEK LS15+H05VV-F+LP-E04A 1m	145000590	
Australia • LINETEK LS15+H03VV-F+LP-23A 1m	145000589	
Taiwan • LINETEK LS15+VCTF+LP-53 1m	145000588	
Japan • LINETEK LS15+VCTF+LP-54 1m	145000587	
Africa • LINETEK LS15+H03VV-F+PE-364 1m	145000586	
CE • LINETEK LP-34+H03VV-F + LS15 1m	145000585	
CCC • Longwell LSG-31+RVV300/300+LS-18 1m	145000568	
Argentina • Longwell LP-24+H03VV-F+LS-18 1m	145000567	
Denmark • Longwell LP-40+H03VV-F+LS-18 1m	145000566	
Switzerland • Longwell LP-37+H03VV-F+LS-18 1m	145000565	

Table 10. Parts list—3-pin power cords (continued)

Region	P/N	CRU ID
Brazil • Longwell LP-46+H03VV-F+LS-18 1m	145000564	*
Israel • Longwell LP-41+H03VV-F+LS-18 1m	145000563	
UL • Longwell LP-30B+SPT-2 18AWG+LS-18 1m	145000562	
UK • Longwell LP-61L+H03VV-F+LS-18 1m	145000561	
Indian • Longwell LP-67+BIS+LS-18 1m	145000560	
Italy • Longwell LP-22+H03VV-F+LS-18 1m	145000559	
Korea • Longwell LP-486+KTLH03VV-F+LS-5 1m	145000558	
Australia • Longwell LP-23A+LFC-3R+LS-18 1m	145000557	
Taiwan • Longwell LP-71+VCTF+LS-33 1m	145000556	
Japan • Longwell LP-54+VCTF+LS-18 1m	145000555	
Africa • Longwell LP-39+H03VV-F+LS-18 1m	145000554	
CE • Longwell LP-34A+H03VV-F+LS-18 1m	145000553	
CCC • VOLEX GB10S3+RVV 300/500+VAC5S 1m	145000538	
UL • Volex US15S3+SPT-2 +VAC5S 1m	145000537	
Italy • VOLEX IT10S3+H03VV-F+VAC5S 1m	145000535	
Denmark • VOLEX MP233D+H03VV-F+VAC5S 1m	145000534	
Korea • VOLEX M2511+KETI IEC+VAC5S 1m	145000533	
Australia • VOLEX AU10S3+H03VV-F+VAC5S 1m	145000532	
Taiwan • VOLEX TW15CS3+VCTF+VAC5S 1m	145000531	
Japan • VOLEX VAC5S+VCTF+M755 1m	145000530	
Argentina • VOLEX VA2073+H03VV-F+VAC5S 1m	145000528	

Table 10. Parts list—3-pin power cords (continued)

Region	P/N	CRU ID
Brazil • VOLEX CH10S3+H03VV-F+VAC5S 1m	145000527	*
Israel • VOLEX SI16S3+H03VV-F+VAC5S 1m	145000526	
CE • VOLEX M2511+H03VV-F+VAC5S 1m	145000525	
Switzerland • VOLEX MP232+H03VV-F+VAC5S 1m	145000524	
UK • VOLEX MP5004+H03VV-F+VAC5S 1m	145000605	

Table 11. Parts list—power cords

Region	P/N	CRU ID
UK • lux 0031+H03VV-F 0.75/3C+0011 1m	145500000	*
CE • lux 0033+H03VV-F 0.75/3C+0011 1m	145500001	
UL • lux 0014+SPT-2 60°C 18/3C+0016 1m	145500002	
CCC • lux 0036+RVV 300/300 0.75/3C+0002 1m	145500003	
Indian • lux 0046+IS694 0.75/3C+0011 1m	145500004	
Japan • lux 0018(E)+VCTF 0.75/3C+0021 1m	145500005	
Australia • lux 0038+H03VV-F 0.75/3C+0011 1m	145500006	
Taiwan • lux 0019+VCTF 0.75/3C+0021 1m	145500007	
Korea • lux 0033+H03VV-F 0.75/3C+0011 1m	145500008	
Italy • lux 0029+H03VV-F 0.75/3C+0011 1m	145500009	
Africa • lux 0044+H03VV-F 0.75/3C+0011 1m	145500010	
Brazil • lux 0034+H03VV-F 0.75/3C+0011 1m	145500011	
Israel • lux 0041+H03VV-F 0.75/3C+0011 1m	145500012	
Switzerland • lux 0027+H03VV-F 0.75/3C+0011 1m	145500013	
Denmark • lux 0048+H03VV-F 0.75/3C+0011 1m	145500014	
Argentina • lux 0040+H03VV-F 0.75/3C+0011 1m	145500015	

Notices

Lenovo may not offer the products, services, or features discussed in this document in all countries. Consult your local Lenovo representative for information on the products and services currently available in your area. Any reference to a Lenovo product, program, or service is not intended to state or imply that only that Lenovo product, program, or service may be used. Any functionally equivalent product, program, or service that does not infringe any Lenovo intellectual property right may be used instead. However, it is the user's responsibility to evaluate and verify the operation of any other product, program, or service.

Lenovo may have patents or pending patent applications covering subject matter described in this document. The furnishing of this document does not give you any license to these patents.

LENOVO GROUP LTD. PROVIDES THIS PUBLICATION "AS IS" WITHOUT WARRANTY OF ANY KIND, EITHER EXPRESS OR IMPLIED, INCLUDING, BUT NOT LIMITED TO, THE IMPLIED WARRANTIES OF NON-INFRINGEMENT, MERCHANTABILITY OR FITNESS FOR A PARTICULAR PURPOSE. Some jurisdictions do not allow disclaimer of express or implied warranties in certain transactions, therefore, this statement may not apply to you.

This information could include technical inaccuracies or typographical errors. Changes are periodically made to the information herein; these changes will be incorporated in new editions of the publication. Lenovo may make improvements and/or changes in the product(s) and/or the program(s) described in this publication at any time without notice.

The products described in this document are not intended for use in implantation or other life support applications where malfunction may result in injury or death to persons. The information contained in this document does not affect or change Lenovo product specifications or warranties. Nothing in this document shall operate as an express or implied license or indemnity under the intellectual property rights of Lenovo or third parties. All information contained in this document was obtained in specific environments and is presented as an illustration. The result obtained in other operating environments may vary.

Lenovo may use or distribute any of the information you supply in any way it believes appropriate without incurring any obligation to you.

Any references in this publication to non-Lenovo Web sites are provided for convenience only and do not in any manner serve as an endorsement of those Web sites. The materials at those Web sites are not part of the materials for this Lenovo product, and use of those Web sites is at your own risk.

Any performance data contained herein was determined in a controlled environment. Therefore, the result obtained in other operating environments may vary significantly. Some measurements may have been made on development-level systems and there is no guarantee that these measurements will be the same on generally available systems. Furthermore, some measurements may have been estimated through extrapolation. Actual results may vary. Users of this document should verify the applicable data for their specific environment.

Trademarks

The following terms are trademarks or registered trademarks of Lenovo in the United States, other countries, or both.

Lenovo
OneKey

Microsoft and Windows are trademarks of Microsoft Corporation in the United States, other countries, or both.

Other company, products, or service names may be trademarks or service marks of others.