lenovo

Lenovo E10-30

Hardware Maintenance Manual

Note:

Before using this information and the product it supports, be sure to read the general information under “Notices” on page 81.

First Edition (March 2014)

© Copyright Lenovo 2014. All rights reserved.

LENOVO products, data, computer software, and services have been developed exclusively at private expense and are sold to governmental entities as commercial items as defined by 48 C.F.R. 2.101 with limited and restricted rights to use, reproduction and disclosure.

LIMITED AND RESTRICTED RIGHTS NOTICE: If products, data, computer software, or services are delivered pursuant a General Services Administration “GSA” contract, use, reproduction, or disclosure is subject to restrictions set forth in Contract No. GS-35F-05925.

© 2014 Lenovo

Contents

About this manual iv

Safety information 1
General safety 2
Electrical safety 3
Safety inspection guide 5
Handling devices that are sensitive to electrostatic discharge 6
Grounding requirements 6
Safety notices: multilingual translations 7
Laser compliance statement 14

Important service information 16
Strategy for replacing FRUs 16
- Strategy for replacing a hard disk drive 17
- Important notice for replacing a system board 17

Important information about replacing RoHS compliant FRUs 18

General checkout 19
What to do first 20
Power system checkout 21
- Checking the AC adapter 21
- Checking operational charging 21
- Checking the battery pack 22

Related service information 23
Restoring the factory contents by using Recovery Disc Set 23
- Start Recovery Disc (one disc) 23
- Operating System Recovery Disc (one or more discs) 23
- Applications and Drivers Recovery Disc (one or more discs) 23
- Supplemental Recovery Disc 23

Passwords 24
- Power-on password 24
- Hard-disk password 24
- Supervisor password 24

Power management 25
- Screen blank mode 25
- Power-saving modes 25

Lenovo E10-30 27
Specifications 27
Status indicators 29
Fn key combinations 31
FRU replacement notices 32
- Screw notices 32

Removing and replacing an FRU 33
- 1010 Battery pack 34
- 1020 Dummy card 35
- 1030 Keyboard 36
- 1040 Hard disk drive(HDD)/Memory/ Mini PCI Express Card slot compartment cover 38
- 1050 Hard disk drive 40
- 1060 PCI Express Mini Card for wireless LAN/WAN 42
- 1070 Fan assembly and Heat Sink assembly 44
- 1080 System board 46
- 1090 LCD unit 49
- 1100 Base cover, speakers, power assembly and USB board 51
- 1110 LCD front bezel 54
- 1120 LCD panel, LCD cable and hinges 56
- 1130 Integrated camera and power switch board 59
- 1140 Antenna assembly and LCD cover 61

Locations 62
- Front view 62
- Right-side view 63
- Bottom and Left-side view 64

Parts list 65
- Overall 66
- LCD FRUs 70
- Keyboard 72
- Miscellaneous parts 76
- Screw 76
- AC adapters 77
- Power cords 78

Notices 81
Trademarks 82

About this manual

This manual contains service and reference information for the following Lenovo product:

Lenovo E10-30

Use this manual to troubleshoot problems.

The manual is divided into the following sections:

- The common sections provide general information, guidelines, and safety information required for servicing computers.
- The product-specific section includes service, reference, and product-specific parts information.

Important:
This manual is intended only for trained servicers who are familiar with Lenovo products. Use this manual to troubleshoot problems effectively.
Before servicing a Lenovo product, make sure to read all the information under "Safety information" on page 1 and "Important service information" on page 16.

Safety information

This chapter presents the following safety information that you need to get familiar with before you service a Lenovo computer:

- "General safety" on page 2
- "Electrical safety" on page 3
- "Safety inspection guide" on page 5
- "Handling devices that are sensitive to electrostatic discharge" on page 6
- "Grounding requirements" on page 6
- "Safety notices: multilingual translations" on page 7
- "Laser compliance statement" on page 14

General safety

Follow these rules below to ensure general safety:

- Observe a good housekeeping in the area where the machines are put during and after the maintenance.
- When lifting any heavy object:
  1. Make sure that you can stand safely without slipping.
  2. Distribute the weight of the object equally between your feet.
  3. Use a slow lifting force. Never move suddenly or twist when you attempt to lift it.
  4. Lift it by standing or pushing up with your leg muscles; this action could avoid the strain from the muscles in your back. Do not attempt to lift any object that weighs more than 16 kg (35 lb) or that you think is too heavy for you.
- Do not perform any action that causes hazards to the customer, or that makes the machine unsafe.
- Before you start the machine, make sure that other service representatives and the customer are not in a hazardous position.
- Please remove covers and other parts in a safe place, away from all personnel, while you are servicing the machine.
- Keep your toolcase away from walk areas so that other people will not trip it over.
- Do not wear loose clothing that can be trapped in the moving parts of the machine. Make sure that your sleeves are fastened or rolled up above your elbows. If your hair is long, fasten it.
- Insert the ends of your necktie or scarf inside clothing or fasten it with the nonconductive clip, about 8 centimeters (3 inches) from the end.
- Do not wear jewelry, chains, metal-frame eyeglasses, or metal fasteners for your clothing.

  Attention: Metal objects are good electrical conductors.
- Wear safety glasses when you are hammering, drilling, soldering, cutting wire, attaching springs, using solvents, or working in any other conditions that may be hazardous to your eyes.
- After service, reinstall all safety shields, guards, labels, and ground wires. Replace any safety device that is worn or defective.
- Reinstall all covers correctly before returning the machine to the customer.
- Fan louvers on the machine help to prevent the overheating of internal components. Do not obstruct fan louvers or cover them with labels or stickers.

Electrical safety

Observe the following rules when working on electrical equipments.

> **Important:**
> Use only approved tools and test equipments. Some hand tools have handles covered with a soft material that does not insulate you when working with live electrical currents.
> Many customers have rubber floor mats near their machines that contain small conductive fibers to decrease electrostatic discharges. Do not use such kind of mat to protect yourself from electrical shock.

- Find the room emergency power-off (EPO) switch, disconnecting switch, or electrical outlet. If an electrical accident occurs, you can then operate the switch or unplug the power cord quickly.
- Do not work alone under hazardous conditions or near the equipment that has hazardous voltages.
- Disconnect all power before:
  - Performing a mechanical inspection
  - Working near power supplies
  - Removing or installing main units
- Before you start to work on the machine, unplug the power cord. If you cannot unplug it, ask the customer to power-off the wall box that supplies power to the machine, and to lock the wall box in the off position.
- If you need to work on a machine that has exposed electrical circuits, observe the following precautions:
  - Ensure that another person, familiar with the power-off controls, is near you.
    Attention: Another person must be there to switch off the power, if necessary.
  - Use only one hand when working with powered-on electrical equipment; keep the other hand in your pocket or behind your back.
    Attention: An electrical shock can occur only when there is a complete circuit. By observing the above rule, you may prevent a current from passing through your body.
  - When using testers, set the controls correctly and use the approved probe leads and accessories for that tester.
  - Stand on suitable rubber mats (obtained locally, if necessary) to insulate you from grounds such as metal floor strips and machine frames.

Observe the special safety precautions when you work with very high voltages; instructions for these precautions are in the safety sections of maintenance information. Be extremely careful when you measure the high voltages.

- Regularly inspect and maintain your electrical hand tools for safe operational condition.
- Do not use worn or broken tools and testers.
- Never assume that power has been disconnected from a circuit. First, check it to make sure that it has been powered off.

- Always look carefully for possible hazards in your work area. Examples of these hazards are moist floors, nongrounded power extension cables, power surges, and missing safety grounds.
- Do not touch live electrical circuits with the reflective surface of a plastic dental mirror. The surface is conductive; such touching can cause personal injury and machine damage.
- Do not service the following parts with the power on when they are removed from their normal operating places in a machine:
  - Power supply units
  - Pumps
  - Blowers and fans
  - Motor generators

  and similar units. (This practice ensures correct grounding of the units.)
- If an electrical accident occurs:
  - Use caution: do not become a victim yourself.
  - Switch off the power.
  - Send the victim to get medical aid.

Safety inspection guide

The purpose of this inspection guide is to assist you in identifying potential unsafe conditions. As each machine was designed and built, required safety items were installed to protect users and service personnel from injury. This guide addresses only those items. You should use good judgment to identify potential safety hazards due to attachment of non-Lenovo features or options not covered by this inspection guide.

If any unsafe conditions are present, you must determine how serious the apparent hazard could be and whether you can continue without first correcting the problem.

Consider these conditions and the safety hazards they present:

- Electrical hazards, especially primary power (primary voltage on the frame can cause serious or fatal electrical shock)
- Explosive hazards, such as a damaged CRT face or a bulging capacitor
- Mechanical hazards, such as loose or missing hardware

To determine whether there are any potential unsafe conditions, use the following checklist at the beginning of every service task. Begin the checks with the power off, and the power cord disconnected.

Checklist:

1. Check exterior covers for damage (loose, broken, or sharp edges).
2. Turn off the computer. Disconnect the power cord.
3. Check the power cord for:
   a. A third-wire ground connector in good condition. Use a meter to measure third-wire ground continuity for 0.1 ohm or less between the external ground pin and the frame ground.
   b. The power cord should be the type specified in the parts list.
   c. Insulation must not be frayed or worn.
4. Check for cracked or bulging batteries.
5. Remove the cover.
6. Check for any obvious non-Lenovo alterations. Use good judgment as to the safety of any non-Lenovo alterations.
7. Check inside the unit for any obvious unsafe conditions, such as metal filings, contamination, water or other liquids, or signs of fire or smoke damage.
8. Check for worn, frayed, or pinched cables.
9. Check that the power-supply cover fasteners (screws or rivets) have not been removed or tampered with.

Handling devices that are sensitive to electrostatic discharge

Any computer part containing transistors or integrated circuits (ICs) should be considered sensitive to electrostatic discharge (ESD). ESD damage can occur when there is a difference in charge between objects. Protect against ESD damage by equalizing the charge so that the machine, the part, the work mat, and the person handling the part are all at the same charge.

Notes:
1. Use product-specific ESD procedures when they exceed the requirements noted here.
2. Make sure that the ESD protective devices you use have been certified (ISO 9000) as fully effective.

When handling ESD-sensitive parts:
- Keep the parts in protective packages until they are inserted into the product.
- Avoid contact with other people.
- Wear a grounded wrist strap against your skin to eliminate static on your body.
- Prevent the part from touching your clothing. Most clothing is insulative and retains a charge even when you are wearing a wrist strap.
- Use the black side of a grounded work mat to provide a static-free work surface. The mat is especially useful when handling ESD-sensitive devices.
- Select a grounding system, such as those listed below, to provide protection that meets the specific service requirement.

Notes:
The use of a grounding system to guard against ESD damage is desirable but not necessary.

  - Attach the ESD ground clip to any frame ground, ground braid, or green-wire ground.
  - When working on a double-insulated or battery-operated system, use an ESD common ground or reference point. You can use coax or connector-outside shells on these systems.
  - Use the round ground prong of the ac plug on ac-operated computers.

Grounding requirements

Electrical grounding of the computer is required for operator safety and correct system function. Proper grounding of the electrical outlet can be verified by a certified electrician.

Safety notices: multilingual translations

The safety notices in this section are provided in English, French, German, Hebrew, Italian, Japanese, and Spanish.

Safety notice 1

Before the computer is powered on after FRU replacement, make sure all screws, springs, and other small parts are in place and are not left loose inside the computer. Verify this by shaking the computer and listening for rattling sounds. Metallic parts or metal flakes can cause electrical shorts.

Avant de remettre l'ordinateur sous tension après remplacement d'une unité en clientèle, vérifiez que tous les ressorts, vis et autres pièces sont bien en place et bien fixées. Pour ce faire, secouez l'unité et assurez-vous qu'aucun bruit suspect ne se produit. Des pièces métalliques ou des copeaux de métal pourraient causer un court-circuit.

Bevor nach einem FRU-Austausch der Computer wieder angeschlossen wird, muß sichergestellt werden, daß keine Schrauben, Federn oder andere Kleinteile fehlen oder im Gehäuse vergessen wurden. Der Computer muß geschüttelt und auf Klappergeräusche geprüft werden. Metallteile oder-splitter können Kurzschlüsse erzeugen.

לפני הפעלת המחשב לאחר החלפת FRU יש לוודא
שכל הברגים, הקפיצים, וחלקים קטנים אחרים נמצאים
במקומם ואינם חופשיים לזוז בתוך המחשב. כדי לוודא
זאת, יש לטלטל את המחשב ולהקשיב לגילוי קולות שקשוק.
חלקי או שבבי מתכת עלולים לגרום לקצרים חשמליים.

Prima di accendere l'elaboratore dopo che é stata effettuata la sostituzione di una FRU, accertarsi che tutte le viti, le molle e tutte le altri parti di piccole dimensioni siano nella corretta posizione e non siano sparse all'interno dell'elaboratore. Verificare ciò scuotendo l'elaboratore e prestando attenzione ad eventuali rumori; eventuali parti o pezzetti metallici possono provocare cortocircuiti pericolosi.

FRU の交換後、コンピュータの電源を入れる前に、ねじ、バネ、その他の小さな部品がすべて正しい位置にあり、またコンピュータの内部で緩んでいないことを確認してください。
これを確認するには、コンピュータを振って、カチャカチャと音がしないか確かめます。金属部品や金属破片はショートの原因になることがあります。

Antes de encender el sistema despues de sustituir una FRU, compruebe que todos los tornillos, muelles y demás piezas pequeñas se encuentran en su sitio y no se encuentran sueltas dentro del sistema. Compruébelo agitando el sistema y escuchando los posibles ruidos que provocarían. Las piezas metálicas pueden causar cortocircuitos eléctricos.

Safety notice 2

⚠ DANGER

Some standby batteries contain a small amount of nickel and cadmium. Do not disassemble a standby battery, recharge it, throw it into fire or water, or short-circuit it. Dispose of the battery as required by local ordinances or regulations. Use only the battery in the appropriate parts listing. Use of an incorrect battery can result in ignition or explosion of the battery.

Certaines batteries de secours contiennent du nickel et du cadmium. Ne les démontez pas, ne les rechargez pas, ne les exposez ni au feu ni à l'eau. Ne les mettez pas en court-circuit. Pour les mettre au rebut, conformez-vous à la réglementation en vigueur. Lorsque vous remplacez la pile de sauvegarde ou celle de l'horloge temps réel, veillez à n'utiliser que les modèles cités dans la liste de pièces détachées adéquate. Une batterie ou une pile inappropriée risque de prendre feu ou d'exploser.

Die Bereitschaftsbatterie, die sich unter dem Diskettenlaufwerk befindet, kann geringe Mengen Nickel und Cadmium enthalten. Sie darf nicht zerlegt, wiederaufgeladen, kurzgeschlossen, oder Feuer oder Wasser ausgesetzt werden. Bei der Entsorgung die örtlichen Bestimmungen für Sondermüll beachten. Beim Ersetzen der Bereitschafts-oder Systembatterie nur Batterien des Typs verwenden, der in der Ersatzteilliste aufgeführt ist. Der Einsatz falscher Batterien kann zu Entzündung oder Explosion führen.

סוללות המתנה מסוימות מכילות כמות קטנה
של ניקל וקדמיום. אין לפרק סוללת המתנה,
לטעון אותה מחדש, להשליך אותה לאש או
למים או לקצר אותה. יש לסלק את הסוללה
כנדרש על ידי התקנות והחוקים המקומיים. יש
להשתמש רק בסוללה המופיעה ברשימת החלקים
המתאימה. שימוש בסוללה לא מתאימה עלול
לגרום להצתה או התפוצצות של הסוללה.

Alcune batterie di riserva contengono una piccola quantità di nichel e cadmio. Non smontarle, ricaricarle, gettarle nel fuoco o nell'acqua né cortocircuitarle. Smaltirle secondo la normativa in vigore (DPR 915/82, successive disposizioni e disposizioni locali). Quando si sostituisce la batteria dell'RTC (real time clock) o la batteria di supporto, utilizzare soltanto i tipi inseriti nell'appropriato Catalogo parti. L'impiego di una batteria non adatta potrebbe determinare l'incendio o l'esplosione della batteria stessa.

予備バッテリーの中には少量のニッケルとカドミウムが含まれているものがあります。したがって、予備バッテリーの分解、再充電、火または水の中への投棄、またはショートさせることは決して行わないでください。バッテリーを廃棄する場合は地方自治体の条例に従ってください。適切なパーツ・リストにあるバッテリーだけを使用してください。誤ったバッテリーを使用すると、バッテリーが発火したり、爆発したりすることがあります。

Algunas baterías de reserva contienen una pequeña cantidad de níquel y cadmio. No las desmonte, ni recargue, ni las eche al fuego o al agua ni las cortocircuite. Deséchelas tal como dispone la normativa local. Utilice sólo baterías que se encuentren en la lista de piezas. La utilización de una batería no apropiada puede provocar la ignición o explosión de la misma.

Safety notice 3

⚠ DANGER

The battery pack contains small amounts of nickel. Do not disassemble it, throw it into fire or water, or short-circuit it. Dispose of the battery pack as required by local ordinances or regulations. Use only the battery in the appropriate parts listing when replacing the battery pack. Use of an incorrect battery can result in ignition or explosion of the battery.

La batterie contient du nickel. Ne la démontez pas, ne l'exposez ni au feu ni à l'eau. Ne la mettez pas en court-circuit. Pour la mettre au rebut, conformez-vous à la réglementation en vigueur. Lorsque vous remplacez la batterie, veillez à n'utiliser que les modèles cités dans la liste de pièces détachées adéquate. En effet, une batterie inappropriée risque de prendre feu ou d'exploser.

Akkus enthalten geringe Mengen von Nickel. Sie dürfen nicht zerlegt, wiederaufgeladen, kurzgeschlossen, oder Feuer oder Wasser ausgesetzt werden. Bei der Entsorgung die örtlichen Bestimmungen für Sondermüll beachten. Beim Ersetzen der Batterie nur Batterien des Typs verwenden, der in der Ersatzteilliste aufgeführt ist. Der Einsatz falscher Batterien kann zu Entzündung oder Explosion führen.

מארז הסוללה מכיל כמות קטנה של ניקל וקדמיום. אין לפרק את מארז הסוללה, להשליך אותו לאש או למים או לקצר אותו. יש לסלק את מארז הסוללה הסוללה כנדרש על ידי התקנות והחוקים המקומיים. יש להשתמש רק בסוללה המופיעה ברשימת החלקים המתאימה בזמן החלפת מארז הסוללה. שימוש בסוללה לא מתאימה עלול לגרום להצתה או התפוצצות של הסוללה.

La batteria contiene piccole quantità di nichel. Non smontarla, gettarla nel fuoco o nell'acqua né cortocircuitarla. Smaltirla secondo la normativa in vigore (DPR 915/82, successive disposizioni e disposizioni locali). Quando si sostituisce la batteria, utilizzare soltanto i tipi inseriti nell'appropriato Catalogo parti. L'impiego di una batteria non adatta potrebbe determinare l'incendio o l'esplosione della batteria stessa.

バッテリー・パックには少量のニッケルが含まれています。バッテリー・パックを分解したり、火または水の中に投げ込んだり、ショートさせないでください。バッテリー・パックの廃棄にあたっては、地方自治体の条例または規則に従ってください。バッテリー・パックを交換するときは、適切なパーツ・リストにあるバッテリーだけを使用してください。誤ったバッテリーを使用すると、バッテリーが発火したり、爆発したりすることがあります。

Las baterías contienen pequeñas cantidades de níquel. No las desmonte, ni recargue, ni las eche al fuego o al agua ni las cortocircuite. Deséchelas tal como dispone la normativa local. Utilice sólo baterías que se encuentren en la lista de piezas al sustituir la batería. La utilización de una batería no apropiada puede provocar la ignición o explosión de la misma.

Safety notice 4

⚠ DANGER

The lithium battery can cause a fire, an explosion, or a severe burn. Do not recharge it, remove its polarized connector, disassemble it, heat it above 100°C (212°F), incinerate it, or expose its cell contents to water. Dispose of the battery as required by local ordinances or regulations. Use only the battery in the appropriate parts listing. Use of an incorrect battery can result in ignition or explosion of the battery.

La pile de sauvegarde contient du lithium. Elle présente des risques d'incendie, d'explosion ou de brûlures graves. Ne la rechargez pas, ne retirez pas son connecteur polarisé et ne la démontez pas. Ne l'exposez pas à une temperature supérieure à 100°C, ne la faites pas brûler et n'en exposez pas le contenu à l'eau. Mettez la pile au rebut conformément à la réglementation en vigueur. Une pile inappropriée risque de prendre feu ou d'exploser.

Die Systembatterie ist eine Lithiumbatterie. Sie kann sich entzünden, explodieren oder schwere Verbrennungen hervorrufen. Batterien dieses Typs dürfen nicht aufgeladen, zerlegt, über 100 C erhitzt oder verbrannt werden. Auch darf ihr Inhalt nicht mit Wasser in Verbindung gebracht oder der zur richtigen Polung angebrachte Verbindungsstecker entfernt werden. Bei der Entsorgung die örtlichen Bestimmungen für Sondermüll beachten. Beim Ersetzen der Batterie nur Batterien des Typs verwenden, der in der Ersatzteilliste aufgeführt ist. Der Einsatz falscher Batterien kann zu Entzündung oder Explosion führen.

סוללת הליתיום עלולה לגרום לשריפה, להתפוצצות או לכוויות קשות. אין לטענן אותה מחדש, לסלק את המחבר המקוטב שלה, לפרק אותה או לחמם אותה לטמפרטורה העולה על 100 מעלות צלזיוס. אין לשרוף את הסוללה ואין לחשוף את תוכן התא למים. יש לסלק את הסוללה כנדרש בתקנות ובחוקים המקומיים. יש להשתמש רק בסוללה המופיעה ברשימת החלקים המתאימים. שימוש בסוללה אחרת עלול לגרום לסכנת שריפה או התפוצצות.

La batteria di supporto e una batteria al litio e puo incendiarsi, esplodere o procurare gravi ustioni. Evitare di ricaricarla, smontarne il connettore polarizzato, smontarla, riscaldarla ad una temperatura superiore ai 100 gradi centigradi, incendiarla o gettarla in acqua. Smaltirla secondo la normativa in vigore (DPR 915/82, successive disposizioni e disposizioni locali). L'impiego di una batteria non adatta potrebbe determinare l'incendio o l'esplosione della batteria stessa.

リチウム・バッテリーは、火災、爆発、または重症のやけどを引き起こすことがあります。バックアップ・バッテリーの充電、その極性コネクターの取り外し、バッテリー本体の分解、
100 ℃ (212 ˚F) 以上への加熱、焼却、電池の中身を水に浸すことはしないでください。バッテリーを廃棄する場合は地方自治体の条例に従ってください。適切なパーツ・リストにあるバッテリーだけを使用してください。誤ったバッテリーを使用すると、バッテリーが発火したり、爆発したりすることがあります。

La batería de repuesto es una batería de litio y puede provocar incendios, explosiones o quemaduras graves. No la recargue, ni quite el conector polarizado, ni la desmonte, ni caliente por encima de los 100°C (212°F), ni la incinere ni exponga el contenido de sus celdas al agua. Deséchela tal como dispone la normativa local.

Safety notice 5

If the LCD breaks and the fluid from inside the LCD gets into your eyes or on your hands, immediately wash the affected areas with water at least for 15 minutes. Seek medical care if any symptoms caused by the fluid are present after washing.

Si le panneau d'affichage à cristaux liquides se brise et que vous recevez dans les yeux ou sur les mains une partie du fluide, rincez-les abondamment pendant au moins quinze minutes. Consultez un médecin si des symptômes persistent après le lavage.

Die Leuchtstoffröhre im LCD-Bildschirm enthält Quecksilber. Bei der Entsorgung die örtlichen Bestimmungen für Sondermüll beachten. Der LCD-Bildschirm besteht aus Glas und kann zerbrechen, wenn er unsachgemäß behandelt wird oder der Computer auf den Boden fällt. Wenn der Bildschirm beschädigt ist und die darin befindliche Flüssigkeit in Kontakt mit Haut und Augen gerät, sollten die betroffenen Stellen mindestens 15 Minuten mit Wasser abgespült und bei Beschwerden anschließend ein Arzt aufgesucht werden.

אם מסך הגביש הנוזלי (LCD) נשבר והנוזל מתוך המסך בא במגע עם עיניכם או ידיכם, שטפו את האזורים הנגועים מיד במים במשך 15 דקות לפחות. פנו לקבלת עזרה רפואית אם תסמינים הנובעים מהמגע עם הנוזל נמשכים לאחר השטיפה.

Nel caso che caso l'LCD si dovesse rompere ed il liquido in esso contenuto entrasse in contatto con gli occhi o le mani, lavare immediatamente le parti interessate con acqua corrente per almeno 15 minuti; poi consultare un medico se i sintomi dovessero permanere.

LCD が破損し、 LCD の中の液体が目に入ったり、手に触れたりした場合は、液体が触れた部分を少なくとも 15 分間洗い流してください。洗い流した後に、液体によって何らかの症状が現れた場合は、医師の治療を受けてください。

Si la LCD se rompe y el fluido de su interior entra en contacto con sus ojos o sus manos, lave inmediatamente las áreas afectadas con agua durante 15 minutos como mínimo. Obtenga atención medica si se presenta algún

Safety notice 6

⚠ DANGER

To avoid shock, do not remove the plastic cover that protects the lower part of the inverter card.

Afin d'éviter tout risque de choc électrique, ne retirez pas le cache en plastique protégeant la partie inférieure de la carte d'alimentation.

Aus Sicherheitsgründen die Kunststoffabdeckung, die den unteren Teil der Spannungswandlerplatine umgibt, nicht entfernen.

כדי למנוע התחשמלות, אין להסיר את מכסה הפלסטיק
המגן על חלקו התחתון של הכרטיס ההפוך.

Per evitare scosse elettriche, non rimuovere la copertura in plastica che avvolge la parte inferiore della scheda invertitore.

感電を防ぐため、インバーター・カードの下部を保護しているプラスチック・カバーを外さないでください。

Para evitar descargas, no quite la cubierta de plástico que rodea la parte baja de la tarjeta invertida.

Safety notice 7

⚠ DANGER

Though the main batteries have low voltage, a shorted or grounded battery can produce enough current to burn personnel or combustible materials.

Bien que le voltage des batteries principales soit peu élevé, le court-circuit ou la mise à la masse d'une batterie peut produire suffisamment de courant pour brûler des matériaux combustibles ou causer des brûlures corporelles graves.

Obwohl Hauptbatterien eine niedrige Spannung haben, können sie doch bei Kurzschluß oder Erdung genug Strom abgeben, um brennbare Materialien zu entzünden oder Verletzungen bei Personen hervorzurufen.

אף שהסוללות הראשיות הן בעלות מתח נמוך, סוללה
מקוצרת או מוארקת עלולה להפיק זרם מספיק לגרימת
כוויות או להצתת חומרים דליקים.

Sebbene le batterie di alimentazione siano a basso voltaggio, una batteria in corto circuito o a massa può fornire corrente sufficiente da bruciare materiali combustibili o provocare ustioni ai tecnici di manutenzione.

メイン・バッテリーの電圧は低くても、ショートしたり、接地したバッテリーが、作業者にやけどを負わせたり、可燃物を燃やすだけの電流を発生させる場合があります。

Aunque las baterías principales tienen un voltaje bajo, una batería cortocircuitada o con contacto a tierra puede producir la corriente suficiente como para quemar material combustible o provocar quemaduras en el personal.

Safety notice 8

⚠ DANGER

Before removing any FRU, turn off the computer, unplug all power cords from electrical outlets, remove the battery pack, and then disconnect any interconnecting cables.

Avant de retirer une unité remplaçable en clientèle, mettez le système hors tension, débranchez tous les cordons d'alimentation des socles de prise de courant, retirez la batterie et déconnectez tous les cordons d'interface.

Die Stromzufuhr muß abgeschaltet, alle Stromkabel aus der Steckdose gezogen, der Akku entfernt und alle Verbindungskabel abgenommen sein, bevor eine FRU entfernt wird.

לפני סילוק FRU כלשהו, יש לכבות את המחשב,
לנתק את כל כבלי החשמל משקעי החשמל, להוציא
את מארז הסוללה, ואז לנתק כבלי חיבור אחרים
אם יש כאלה.

Prima di rimuovere qualsiasi FRU, spegnere il sistema, scollegare dalle prese elettriche tutti i cavi di alimentazione, rimuovere la batteria e poi scollegare i cavi di interconnessione.

FRU を取り外す前に、 ThinkPad の電源を切って、すべての電源コードをコンセントから外してください。次に、バッテリー・パックを外し、相互接続ケーブルを外してください。

Antes de quitar una FRU, apague el sistema, desenchufe todos los cables de las tomas de corriente eléctrica, quite la batería y, a continuación, desconecte cualquier cable de conexión entre dispositivos.

Laser compliance statement

Some models of Lenovo computer are equipped from the factory with an optical storage device such as a CD-ROM drive or a DVD-ROM drive. Such devices are also sold separately as options. If one of these drives is installed, it is certified in the U.S. to conform to the requirements of the Department of Health and Human Services 21 Code of Federal Regulations (DHHS 21 CFR) Subchapter J for Class 1 laser products. Elsewhere, the drive is certified to conform to the requirements of the International Electrotechnical Commission (IEC) 825 and CENELEC EN 60 825 for Class 1 laser products.

If a CD-ROM drive, a DVD-ROM drive, or another laser device is installed, note the following:

⚠ CAUTION

Use of controls or adjustments or performance of procedures other than those specified herein might result in hazardous radiation exposure.

O uso de controles, ajustes ou desempenho de procedimentos diferentes daqueles aqui especificados pode resultar em perigosa exposição à radiação.

凡未在这里指明的任何控制用法、调整、行为，
都会导致严重后果。

Pour éviter tout risque d'exposition au rayon laser, respectez les consignes de réglage et d'utilisation des commandes, ainsi que les procédures décrites.

Werden Steuer- und Einstellelemente anders als hier festgesetzt verwendet, kann gefährliche Laserstrahlung auftreten.

Az itt előírt eljárásoktól, beállításoktól és vezérlésektől eltérni a lézersugárzás veszélye miatt kockázatos !

L'utilizzo di controlli, regolazioni o l'esecuzione di procedure diverse da quelle specificate possono provocare l'esposizione a.

Использование элементов настройки и выполнение процедур иных, чем указано здесь, может привести к опасному радиационному облучению.

Použitie kontrôl, úprav alebo iných vykonaní od iných výrobcov, ako je v tomto špecifikované, mohlo by mať za následok nebezpečenstvo vystavenia sa vyžiarovaniu.

本書で指定された内容以外の、お客様による整備、調整、または手順を行った場合、レーザー光の放射の危険があります。

El uso de controles o ajustes o la ejecución de procedimientos distintos de los aquí especificados puede provocar la exposición a radiaciones peligrosas.

Opening the CD-ROM drive, the DVD-ROM drive, or any other optical storage device could result in exposure to hazardous laser radiation. There are no serviceable parts inside those drives. **Do not open**.

A CD-ROM drive, a DVD-ROM drive, or any other storage device installed may contain an embedded Class 3A or Class 3B laser diode. Note the following:

⚠ DANGER

Emits visible and invisible laser radiation when open. Do not stare into the beam, do not view directly with optical instruments, and avoid direct exposure to the beam.

Radiação por raio laser ao abrir. Não olhe fixo no feixe de luz, não olhe diretamente por meio de instrumentos óticos e evite exposição direta com o feixe de luz.

开启时会有激光发射时，请勿盯视激光光束，请勿直接查看
视觉仪器，并且避免直接接触在激光光束之中。

Rayonnement laser si carter ouvert. Évitez de fixer le faisceau, de le regarder directement avec des instruments optiques, ou de vous exposer au rayon.

Laserstrahlung bei geöffnetem Gerät. Nicht direkt oder über optische Instrumente in den Laserstrahl sehen und den Strahlungsbereich meiden.

Kinyitáskor lézersugár ! Ne nézzen bele se szabad szemmel, se optikai eszközökkel. Kerülje a sugárnyalábbal való érintkezést!

Aprendo l'unità vengono emesse radiazioni laser. Non fissare il fascio, non guardarlo direttamente con strumenti ottici e evitare l'esposizione diretta al fascio.

Открывая, берегитесь лазерного излучения.
Не смотрите на луч, не разглядывайте его
с помощью оптических инструментов, а также
избегайте прямого воздействия лазерного луча.

Keď je laserová jednotka otvorená. Vyhnite sa priamemu pohľadu a nehľadte priamo s optickými nástrojmi do ľúča a vyhnite sa priamemu vystaveniu ľúčov.

開けるとレーザー光が放射されます。光線を見つめたり、光学機械を使って直接見たりしないでください。

Radiación láser al abrir. No mire fijamente ni examine con instrumental óptico el haz de luz. Evite la exposición directa al haz.

Important service information

This chapter presents the following important service information:

- "Strategy for replacing FRUs" on page 16
  - "Strategy for replacing a hard disk drive" on page 17
  - "Important notice for replacing a system board" on page 17
- "Important information about replacing RoHS compliant FRUs" on page 18

Important:
BIOS and device driver fixes are customer-installable. The BIOS and device drivers are posted on the customer support site: http://consumersupport.lenovo.com/.

Strategy for replacing FRUs

Before replacing parts:

Make sure that all software fixes, drivers, and BIOS downloads are installed before replacing any FRUs listed in this manual.

After a system board is replaced, ensure that the latest BIOS is loaded to the system board before completing the service action.

To download software fixes, drivers, and BIOS, follow the steps below:

1. Go to http://consumersupport.lenovo.com/.
2. Enter the serial number or select a product or use Lenovo smart downloading.
3. Select the BIOS/Driver/Applications and download.
4. Follow the directions on the screen and install the necessary software.

Use the following strategy to prevent unnecessary expense for replacing and servicing FRUs:

- If you are instructed to replace an FRU, but the replacement does not solve the problem, reinstall the original FRU before you continue.
- Some computers have both a processor board and a system board. If you are instructed to replace either of them, and replacing one of them does not solve the problem, reinstall that board, and then replace the other one.
- If an adapter or a device consists of more than one FRU, any of the FRUs may be the cause of the error. Before replacing the adapter or device, remove the FRUs one by one to see if the symptoms change. Replace only the FRU that changed the symptoms.

Attention: The setup configuration on the computer you are servicing may have been customized. Running Automatic Configuration may alter the settings. Note the current configuration settings (using the View Configuration option); then, when service has been completed, verify that those settings remain in effect.

Strategy for replacing a hard disk drive

Always try to run a low-level format before replacing a hard disk drive. This will cause all customer data on the hard disk to be lost. Make sure that the customer has a current backup of the data before performing this action.

Attention: The drive startup sequence in the computer you are servicing may have been changed. Be extremely careful during write operations such as copying, saving, or formatting. If you select an incorrect drive, data or programs can be overwritten.

Important notice for replacing a system board

Some components mounted on a system board are very sensitive. Improper handling can cause damage to those components, and may cause a system malfunction.

Attention: When handling a system board:

- Do not drop the system board or apply any excessive force to it.
- Avoid rough handling of any kind.
- Avoid bending the system board and hard pushing to prevent cracking at each BGA (Ball Grid Array) chipset.

Important information about replacing RoHS compliant FRUs

RoHS, The Restriction of Hazardous Substances in Electrical and Electronic Equipment Directive (2002/95/EC) is a European Union legal requirement affecting the global electronics industry. RoHS requirements must be implemented on Lenovo products placed on the market after June 2006. Products on the market before June 2006 are not required to have RoHS compliant parts. If the original FRU parts are non-compliant, replacement parts can also be non-compliant. In all cases if the original FRU parts are RoHS compliant, the replacement part must also be RoHS compliant.

Note: RoHS and non-RoHS FRU part numbers with the same fit and function are identified with unique FRU part numbers.

Lenovo plans to transit to RoHS compliance well before the implementation date and expects its suppliers to be ready to support Lenovo's requirements and schedule in the EU. Products sold in 2005 and 2006 will contain some RoHS compliant FRUs. The following statement pertains to these products and any product Lenovo produces containing RoHS compliant FRUs.

RoHS compliant FRUs have unique FRU part numbers. Before or after the RoHS implementation date, failed RoHS compliant parts must always be replaced with RoHS compliant ones, so only the FRUs identified as compliant in the system HMM or direct substitutions for those FRUs may be used.

Products marketed before June 2006		Products marketed after June 2006	
Current or original part	**Replacement FRU**	**Current or original part**	**Replacement FRU**
Non-RoHS	Can be Non-RoHS	Must be RoHS	Must be RoHS
Non-RoHS	Can be RoHS		
Non-RoHS	Can sub to RoHS		
RoHS	Must be RoHS		

Note: A direct substitution is a part with a different FRU part number that is automatically shipped by the distribution center at the time of the order.

General checkout

This chapter presents the following information:

- "What to do first" on page 20
- "Power system checkout" on page 21

Before you go to the checkout, make sure to read the following important notes:

Important notes:

- **Only certified trained personnel can service the computer.**
- **Before replacing any FRU, read the entire page on removing and replacing FRUs.**
- **When you replace FRUs, use new nylon-coated screws.**
- **Be extremely careful during such write operations as copying, saving, or formatting.** Drives in the computer that you are servicing sequence might have been altered. If you select an incorrect drive, data or programs might be overwritten.
- **Replace an FRU only with another FRU of the correct model.** When you replace an FRU, make sure that the machine model and the FRU part number are correct by referring to the FRU parts list.
- **An FRU should not be replaced just because of a single, unreproducible failure.** Single failures can occur for a variety of reasons that have nothing to do with a hardware defect, such as cosmic radiation, electrostatic discharge, or software errors. Consider replacing an FRU only when a problem recurs. If you suspect that an FRU is defective, clear the error logs and run the test again. If the error does not recur, do not replace the FRU.
- **Be careful not to replace a nondefective FRU.**

What to do first

When you do return an FRU, you must include the following information in the parts exchange form or parts return form that you attach to it:

1. Name and phone number of servicer
2. Date of service
3. Date on which the machine failed
4. Date of purchase
5. Procedure index and page number in which the failing FRU was detected
6. Failing FRU name and part number
7. Machine type, model number, and serial number
8. Customer's name and address

Note for warranty: During the warranty period, the customer may be responsible for repair costs if the computer damage was caused by misuse, accident, modification, unsuitable physical or operating environment, or improper maintenance by the customer.

The following is a list of some common items that are not covered under warranty and some symptoms that might indicate that the system was subjected to stress beyond normal use.

Before checking problems with the computer, determine whether the damage is covered under the warranty by referring to the following list:

The following are not covered under warranty:

- LCD panel cracked from the application of excessive force or from being dropped
- Scratched (cosmetic) parts
- Distortion, deformation, or discoloration of the cosmetic parts
- Plastic parts, latches, pins, or connectors that have been cracked or broken by excessive force
- Damage caused by liquid spilled into the system
- Damage caused by the improper insertion of a PC Card or the installation of an incompatible card
- Improper disk insertion or use of an optical drive
- Diskette drive damage caused by pressure on the diskette drive cover, foreign material in the drive, or the insertion of a diskette with multiple labels
- Damaged or bent diskette eject button
- Fuses blown by attachment of a nonsupported device
- Forgotten computer password (making the computer unusable)
- Sticky keys caused by spilling a liquid onto the keyboard
- Use of an incorrect AC adapter on laptop products

The following symptoms might indicate damage caused by nonwarranted activities:

- Missing parts might be a symptom of unauthorized service or modification.
- If the spindle of a hard disk drive becomes noisy, it may have been subjected to excessive force, or dropped.

Power system checkout

To verify a symptom, follow the steps below:

1. Turn off the computer.
2. Remove the battery pack.
3. Connect the AC adapter.
4. Make sure that power is supplied when you turn on the computer.
5. Turn off the computer.
6. Disconnect the AC adapter and install the charged battery pack.
7. Make sure that the battery pack supplies power when you turn on the computer.

If you suspect a power problem, see the appropriate one of the following power supply checkouts:

- "Checking the AC adapter" on page 21
- "Checking operational charging" on page 21
- "Checking the battery pack" on page 22

Checking the AC adapter

You are here because the computer fails only when the AC adapter is used.

- If the power-on indicator does not turn on, check the power cord of the AC adapter for correct continuity and installation.
- If the computer does not charge during operation, go to "Checking operational charging".

To check the AC adapter, follow the steps below:

1. Unplug the AC adapter cable from the computer.
2. Measure the output voltage at the plug of the AC adapter cable. See the following figure:

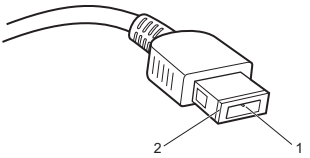

Pin	Voltage (V DC)
1	+20
2	0

Note: Output voltage for the AC adapter pin No. 2 may differ from the one you are servicing.

3. If the voltage is not correct, replace the AC adapter.
4. If the voltage is acceptable, do the following:

- Replace the system board.
- If the problem persists, go to "Lenovo E10-30" on page 27.

Note: Noise from the AC adapter does not always indicate a defect.

Checking operational charging

To check whether the battery charges properly during operation, use a discharged battery pack or a battery pack that has less than 50% of the total power remaining when installed in the computer.

Perform operational charging. If the battery status indicator or icon does not light on, remove the battery pack and let it return to room temperature. Reinstall the battery pack. If the charge indicator or icon is still off, replace the battery pack.

If the charge indicator still does not light on, replace the system board. Then reinstall the battery pack. If it is still not charged, go to the next section.

Checking the battery pack

Battery charging does not start until the Power Meter shows that less than 95% of the total power remains; under this condition the battery pack can charge to 100% of its capacity. This protects the battery pack from being overcharged or from having a shortened life.

To check your battery, move your cursor to the Power Meter icon in the icon tray of the Windows® taskbar and wait for a moment (but do not click it), and the percentage of battery power remaining is displayed. To get detailed information about the battery, double-click the Power Meter icon.

Note: If the battery pack becomes hot, it may not be able to be charged. Remove it from the computer and leave it at room temperature for a while. After it cools down, reinstall and recharge it.

To check the battery pack, follow the steps below:

1. Turn off the computer.
2. Remove the battery pack and measure the voltage between battery terminals 1 (+) and 7 (-). See the following figure:

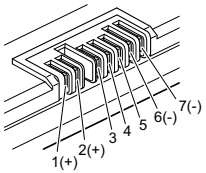

Terminal	Voltage (V DC)
1	+0 to +14
7	Ground (-)

3. If the voltage is less than +11.0 V DC, the battery pack has been discharged.
   Note: Recharging will be continued for at least 3 hours, even though the indicator does not light on.
   If the voltage is still less than +11.0 V DC after recharging, replace the battery.
4. If the voltage is more than +11.0 V DC, measure the resistance between battery terminals 5 and 7. The resistance must be 4 to 30 KΩ.
   If the resistance is not correct, replace the battery pack. If the resistance is correct, replace the system board.

Related service information

This chapter presents the following information:

- "Restoring the factory contents by using Recovery Disc Set" on page 23
- "Passwords" on page 24
- "Power management" on page 25

Restoring the factory contents by using Recovery Disc Set

When the hard disk drive or solid state drive is replaced because of a failure, no product recovery program is on the new drive. In this case, you must use the *Recovery Disc Set* for the computer. Order the *Recovery Disc Set* and the drive at the same time so that you can recover the new drive with the pre-installed software when they arrive.

The *Recovery Disc Set* consists of the following set of DVDs to restore the computer to the original factory configuration.

Start Recovery Disc (one disc)

This disc is used to format the hard disk drive and initiate the recovery process.

Operating System Recovery Disc (one or more discs)

This disc restores the Microsoft Windows operating system.

Applications and Drivers Recovery Disc (one or more discs)

This disc restores the pre-installed applications and drivers on the computer.

Supplemental Recovery Disc

This disc contains additional content, such as software for specific models and updates to the software that was preloaded on the computer. Not all recovery disc sets come with a *Supplemental Recovery Disc*.

To restore the computer to the original factory configuration using the recovery disc set, do the following:

1. Insert the bootable *Start Recovery Disc* into the optical drive.
2. Start the computer. When the Lenovo logo comes up, immediately press F12; on the boot sequence menu, select the optical drive as the first boot-up device. The computer will boot from the *Start Recovery Disc*. Follow the on-screen instructions to begin the recovery process.
3. Read the license. If you agree with the terms, select **I accept these terms and conditions** and then click **Next**.
4. Insert the **Operating System Recovery Disc** when prompted and click **Yes** to begin the operating system recovery process.
5. Insert the *Applications and Drivers Recovery Disc* when prompted and then click **OK** to begin the applications and drivers recovery process.
6. If you have a *Supplemental Recovery Disc*, insert it when prompted and click **Yes**. If you do not have a *Supplemental Recovery Disc*, click **No**.

7. When all of the data has been copied from the last disc in the set, remove the disc and restart the computer.

> **Note:** The remainder of the recovery process is fully automated and no action is required by you. The computer will restart into the Windows desktop several times and you might experience periods when no activity is apparent on the screen for several minutes at a time. This is normal.

8. When the recovery process is complete, the Welcome to the Microsoft Windows screen is displayed. Follow the instructions on the screen to complete the Windows setup.

Passwords

As many as three passwords may be needed for any Lenovo computer: the power-on password (POP), the hard disk password (HDP), and the supervisor password (SVP).

If any of these passwords has been set, a prompt for it appears on the screen whenever the computer is turned on. The computer does not start until the password is entered.

Exception: If only an SVP is installed, the password prompt does not appear when the operating system is booted.

Power-on password

A power-on password (POP) protects the system from being powered on by an unauthorized person. The password must be entered before an operating system can be booted.

Hard-disk password

There are two hard-disk passwords (HDPs):

+ User HDP - for the user

+ Master HDP - for the system administrator, who can use it to get access to the hard disk drive even if the user has changed the user HDP

Attention: If the user HDP has been forgotten, check whether a master HDP has been set. If it has, it can be used for access to the hard disk drive. If no master HDP is available, neither Lenovo nor Lenovo authorized service technicians provide any services to reset either the user or the master HDP, or to recover data from the hard disk drive. The hard disk drive can be replaced for a scheduled fee.

Supervisor password

A supervisor password (SVP) protects the system information stored in the BIOS Setup Utility. The user must enter the SVP in order to get access to the BIOS Setup Utility and change the system configuration.

Attention: If the SVP has been forgotten and cannot be made available to the servicer, there is no service procedure to reset the password. The system board must be replaced for a scheduled fee.

Power management

Note: Power management modes are not supported for APM operating system.

To reduce power consumption, the computer has three power management modes: screen blank, sleep (standby), and hibernation.

Screen blank mode

If the time set on the "Turn off monitor" timer in the operating system expires, the LCD backlight turns off. You can also turn off the LCD backlight by pressing Fn+F2.

To end screen blank mode and resume normal operation, press any key.

Power-saving modes

When you have finished working with your computer, you can put it to shut it down, sleep, or hibernate.

Shutting down the computer

If you are not going to use your computer for a long time, shut it down.
To shut down the computer, do the following:

- **Windows 7**:
  Click **Start** → **Shut down**.
- **Windows 8.1**:
  1. Open the charms bar, then select **Settings** .

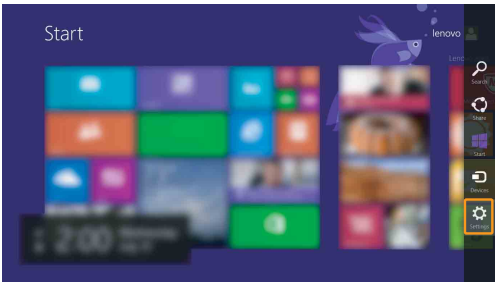

2. Select **Power** → **Shut down**.

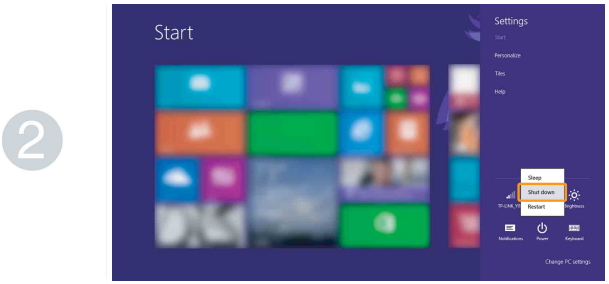

Putting your computer to sleep

If you will be away from your computer for only a short time, put the computer to sleep. When the computer is in sleep mode, you can quickly wake it to resume use, bypassing the startup process. To put the computer to sleep, do one of the following:

- Close the display lid.
- Press the power button.
- Do the proper operations in the operating system.

Windows 7:

Click **Start** → **Sleep**.

Windows 8.1:

Open the charms bar, then select **Settings** → **Power** → **Sleep**.

Attention:

- Wait until the power indicator light starts blinking (indicating that the computer is in sleep mode) before you move your computer. Moving your computer while the hard disk is spinning can damage the hard disk, causing loss of data.

To wake the computer, do one of the following:

- Press any key on the keyboard.
- Press the power button.

Putting your computer to hibernate

By using this mode, you can turn off the computer completely without saving files or exiting from any program that is running. When the computer enters hibernation mode, all open programs, folders, and files are saved to the hard disk drive, and then the computer turns off.

To put the computer into hibernation mode, do the following:

- **Windows 7**:

  Click **Start** → **Hibernation**.

Lenovo E10-30

This chapter presents the following product-specific service references and product-specific parts information:

- "Specifications" on page 27
- "Status indicators" on page 29
- "FRU tests" on page 31
- "Fn key combinations" on page 31
- "FRU replacement notices" on page 32
- "Removing and replacing an FRU" on page 33
- "Locations" on page 62
- "Parts list" on page 65

Specifications

The following table lists the specifications of the Lenovo E10-30:

Table 1. Specifications

Feature	Description
Processor	See the system properties of your computer. You can do this as follows: • **Windows 8.1:** Click **Control Panel**, then click **Hardware and Sound**, click **Device Manager** under **Devices and Printers** and double click **Processors**. • **Windows 7:** Click **Start**, right-click **Computer**; then from the pull down menu select **Properties**.
Graphic Chipset	• Intel Gen7 graphics • Intel HD graphics
Display	• 10.1"HD, LED backlight, Flat type
Standard memory	• DDR3L-1066 / 1333 • 4 GB • On board
Hard disk drive	• 2.5-inch, 7 mm / 9 mm • SATA II
Optical drive	• Support USB external ODD

Table 1. Specifications (continued)

Feature	Description
I/O port	• Combo audio jack ×1 • RJ-45 × 1 • 2 in 1 slot × 1 (SD / MMC) • USB 2.0 × 1, USB 3.0 × 1 • VGA × 1
MODEM slot	• N/A
Audio	• Speaker x 2 • Build in Mic x 1
Ethernet (on the system board)	• 10/100 M
PCI Express Mini Card slot	• N/A
WWAN	• N/A
Bluetooth wireless	• only support BT&WIFI combo module
Integrated camera	• 0.3 M / 1.0 M HD
Battery	• Lithium-ion
AC adapter	• 45 W
Pre-installed operating system	• Windows 8.1/Windows 7 HB/(Android/Linpus TBD)

Status indicators

The system status indicators below show the computer status:

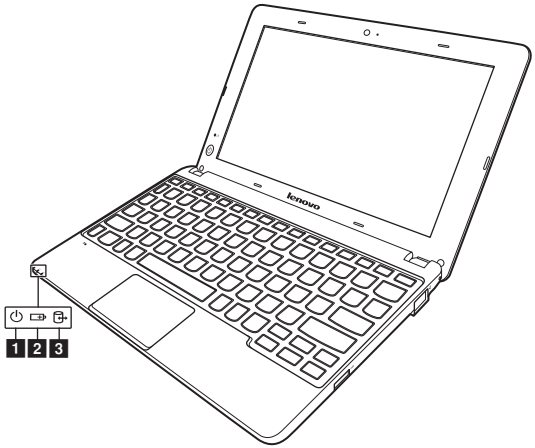

Table 2. Status indicators

Indicator	Indicator status	Meaning
Battery status indicator	On (solid white)	The battery has more than 20% charge.
	Solid amber	The battery has between 5% and 20% charge.
	Fast blinking amber	The battery has less than 5% charge.
	Slow blinking amber	The battery is being charged. When battery charge reaches 20%, the blinking color changes to white.
	Slow blinking white	The battery has between 20% and 80% charge and is still charging. When the battery reaches 80% charge the light will stop blinking, but charging will continue until the battery is fully charged.
Power status indicator	On (solid white)	The computer is powered on.
	Blinking	The computer is in sleep mode.
	Off	The computer is powered off.
Device access indicator	Blinking	Data is being read from or written to the hard disk drive or other external storage devices.

Attention:

- When the indicator is on, do not put the computer into sleep mode or turn off the computer.
- When the indicator is on, do not move the computer. Sudden physical shock might cause drive errors.

Fn key combinations

The following table shows the function of each combination of Fn with a function key.

Table 3. Fn key combinations

The following is a brief introduction to the function key combinations.

Fn + Pgup:	Activates the pause function.
Fn + PgDn:	Activates the break function.
PgUp:	Enables/disables the scroll lock.
PgDn:	Activates the insert function.

FRU replacement notices

This section presents notices related to removing and replacing parts. Read this section carefully before replacing any FRU.

Screw notices

Loose screws can cause a reliability problem. In the Lenovo computer, this problem is addressed with special nylon-coated screws that have the following characteristics:

- They maintain tight connections.
- They do not easily come loose, even with shock or vibration.
- They are harder to tighten.
- Each one should be used only once.

Do the following when you service this machine:

- Keep the screw kit in your tool bag.
- Always use new screws.
- Use a torque screwdriver if you have one.

Tighten screws as follows:

- **Plastic to plastic**

  Turn an additional 90° after the screw head touches the surface of the plastic part:

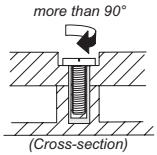

- **Logic card to plastic**

  Turn an additional 180° after the screw head touches the surface of the logic card:

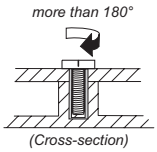

- **Torque driver**

  If you have a torque screwdriver , refer to the “Torque” column for each step.
- Make sure that you use the correct screws. If you have a torque screwdriver, tighten all screws firmly to the torque shown in the table. **Never use a screw that you removed. Use a new one. Make sure that all screws are tightened firmly**.
- Ensure torque screwdrivers are calibrated correctly following country specifications.

Removing and replacing an FRU

This section presents exploded figures with the instructions to indicate how to remove and replace the FRU. Make sure to observe the following general rules:

1. Do not attempt to service any computer unless you have been trained and certified. An untrained person runs the risk of damaging parts.
2. Before replacing any FRU, review "FRU replacement notices" on page 32.
3. Begin by removing any FRUs that have to be removed before the failing FRU. Any of such FRUs are listed at the top of the page. Remove them in the order in which they are listed.
4. Follow the correct sequence in the steps to remove the FRU, as given in the figures by the numbers in square callouts.
5. When turning a screw to replace an FRU, turn it in the direction as given by the arrow in the figure.
6. When removing the FRU, move it in the direction as given by the arrow in the figure.
7. To put the new FRU in place, reverse the removal procedures and follow any of the notes that pertain to replacement. For information about connecting and arranging internal cables, see "Locations" on page 62.
8. When replacing an FRU, use the correct screw as shown in the procedures.

> **⚠ DANGER**
>
> Before removing any FRU, turn off the computer, unplug all power cords from electrical outlets, remove the battery pack, and then disconnect any of the interconnecting cables.

Attention: After replacing an FRU, do not turn on the computer until you have made sure that all screws, springs, and other small parts are in place and none are loose inside the computer. Verify this by shaking the computer gently and listening for rattling sounds. Metallic parts or metal flakes can cause electrical short circuits.

Attention: The system board is sensitive to, and can be damaged by, electrostatic discharge. Before touching it, establish personal grounding by touching a ground point with one hand or using an electrostatic discharge (ESD) strap (P/N 6405959) to remove potential shock reasons.

1010 Battery pack

> ⚠ **DANGER**
> Only use the battery specified in the parts list for your computer. Any other battery could ignite or explode.

Figure 1. Removal steps of battery pack

Unlock the manual battery latch **1**. Holding the spring-loaded battery latch in the unlocked position **2**, remove the battery pack in the direction shown by the arrow **3**.

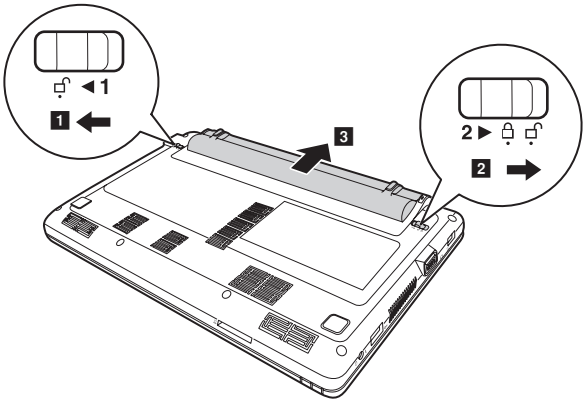

When installing: Install the battery pack along the slide rails of the slot. Then make sure that the battery release lever is in the locked position.

1020 Dummy card

Figure 2. Removal steps of dummy card

Remove the dummy card in the direction shown by arrows **1** **2**.

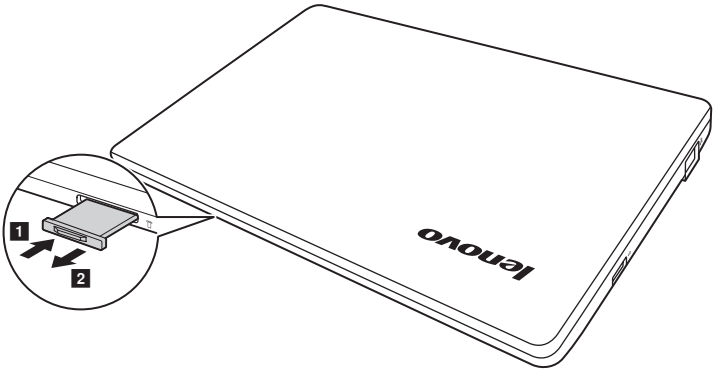

1030 Keyboard

For access, remove this FRU:

- "1010 Battery pack" on page 34

Figure 3. Removal steps of keyboard

Remove three screws 1 .

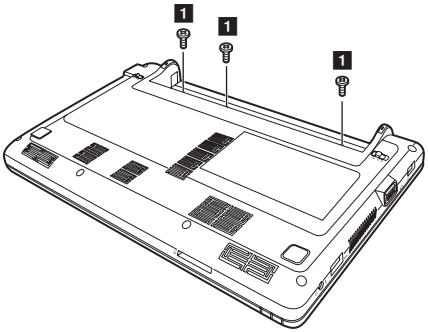

Step	Screw (quantity)	Color	Torque	P/N
1	M2 × 1.7 mm, flat-head, nylok-coated (3)	Black	1.85+/-0.15 kgfcm	90205495

Loosen the keyboard with fingers in the direction shown by arrow 2 .



Figure 3. Removal steps of keyboard (continued)

Lift the keyboard a little **3**, and then detach the connector in the direction shown by arrows **4** and **5**.

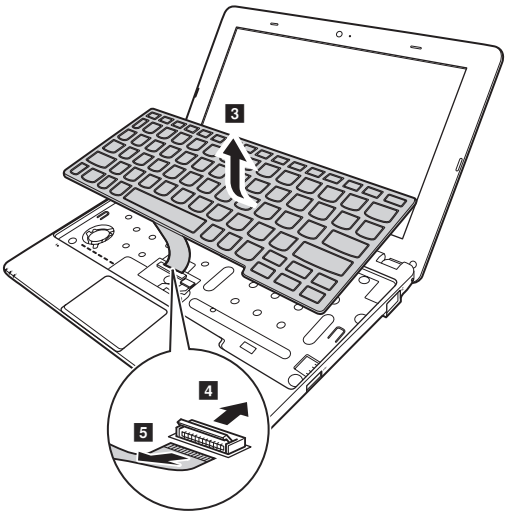

1040 Hard disk drive(HDD)/Memory/Mini PCI Express Card slot compartment cover

For access, remove these FRUs in order:

- "1010 Battery pack" on page 34
- "1020 Dummy card" on page 35
- "1030 Keyboard" on page 36

Figure 4. Removal steps of hard disk drive(HDD)/Memory/Mini PCI Express Card slot compartment cover

Remove seven screws 1 .

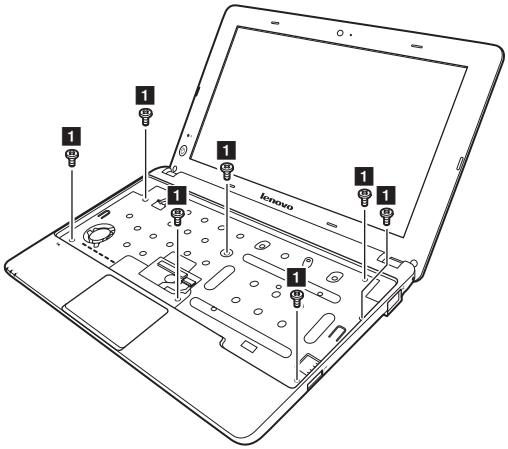

Step	Screw (quantity)	Color	Torque
1	M2 × 6 mm, flat-head, nylok-coated (7)	Black	1.85+/-0.15 kgfcm

Figure 4. Removal steps of hard disk drive(HDD)/Memory/Mini PCI Express Card slot compartment cover (continued)

Loosen the screws **2** that secure the compartment cover. Remove the compartment cover **3** .

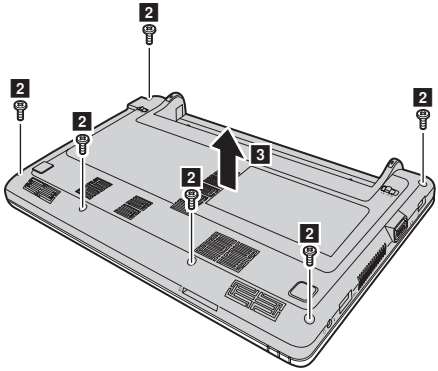

Step	Screw (quantity)	Color	Torque	P/N
2	M2 × 6 mm, flat-head, nylok-coated (6)	Black	1.85+/-0.15 kgfcm	90205492

1050 Hard disk drive

For access, remove these FRUs in order:

- "1010 Battery pack" on page 34
- "1020 Dummy card" on page 35
- "1030 Keyboard" on page 36
- "1040 Hard disk drive(HDD)/Memory/Mini PCI Express Card slot compartment cover" on page 38

Attention:

- **Do not drop the hard disk drive or apply any physical shock to it.** The hard disk drive is sensitive to physical shock. Improper handling can cause damages and permanent loss of data.
- Before removing the drive, suggest the customer to backup all the information on it if possible.
- Never remove the drive while the system is operating or is in suspend mode.

Figure 5. Removal steps of hard disk drive

Remove the frame fixing screws 1 .

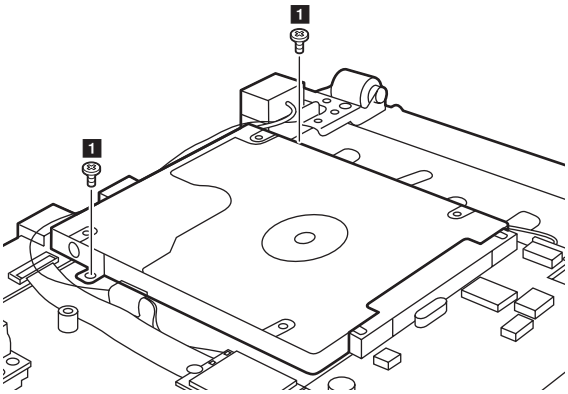

Step	Screw (quantity)	Color	Torque
1	M2 × 3 mm, flat-head, nylok-coated (2)	Black	1.85+/-0.15 kgfcm

Figure 5. Removal steps of hard disk drive (continued)

Remove the hard disk drive in the direction shown by arrow **2** .

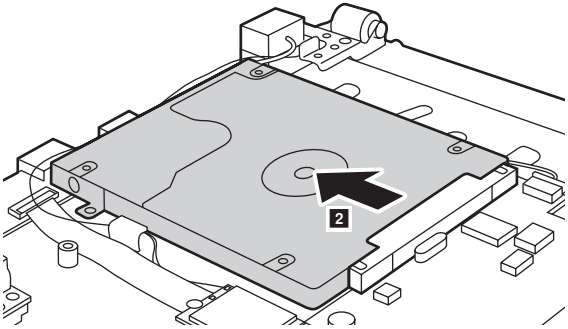

When installing: Make sure that the HDD connector is attached firmly.

Remove two screws **3** and detach the metal frame from the hard disk drive.

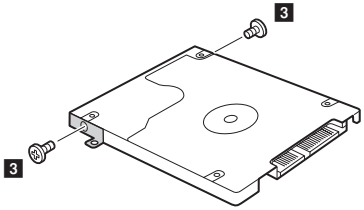

Step	Screw (quantity)	Color	Torque	P/N
3	M3 × 3 mm, flat-head, nylok-coated (2)	Black	3.0 +/- 0.3 kgfcm	90205494

1060 PCI Express Mini Card for wireless LAN/WAN

For access, remove these FRUs in order:

- "1010 Battery pack" on page 34
- "1020 Dummy card" on page 35
- "1030 Keyboard" on page 36
- "1040 Hard disk drive(HDD)/Memory/Mini PCI Express Card slot compartment cover" on page 38

Figure 6. Removal steps of PCI Express Mini Card for wireless LAN/WAN

Disconnect the two wireless LAN cables (black, white) 1, and then remove the screw 2.

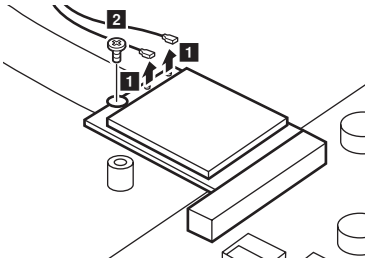

In step 1, unplug the jacks by using the removal tool antenna RF connector (P/N: 08K7159), or pick up the connectors with your fingers and gently unplug them in the direction shown by arrows.

Notes: wireless LAN card has 2 cables in step 1.

Wireless LAN card in some models may have 3 cables in step 1.

Step	Screw (quantity)	Color	Torque
2	M2 × 3 mm, flat-head, nylok-coated (1)	Black	1.85 +/- 0.15 kgfcm

Figure 6. Removal steps of PCI Express Mini Card for wireless LAN/WAN (continued)

Remove the card in the direction shown by arrow **3** .

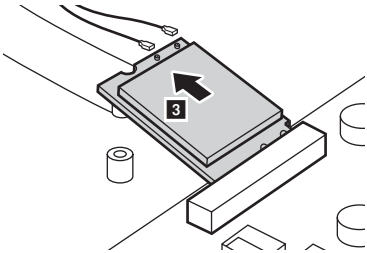

When installing:

- In models with a wireless LAN card that has two antenna connectors, plug the black cable (1st) (MAIN) into the jack labeled **1**, and the white cable (2nd) (AUX) into jack labeled **2** on the card.
- In models with a wireless LAN card that has three antenna connectors, plug the black cable (1st) (MAIN) into the jack labeled **1**, the grey cable (3rd) into jack labeled **3**, and the white cable (2nd) (AUX) into jack labeled **2** on the card.

1070 Fan assembly and Heat Sink assembly

For access, remove these FRUs in order:

- "1010 Battery pack" on page 34
- "1020 Dummy card" on page 35
- "1030 Keyboard" on page 36
- "1040 Hard disk drive(HDD)/Memory/Mini PCI Express Card slot compartment cover" on page 38
- "1050 Hard disk drive" on page 40
- "1060 PCI Express Mini Card for wireless LAN/WAN" on page 42

Figure 7. Removal steps of fan assembly and heat sink assembly

Unplug the fan connector in the direction shown by arrow **1** and loosen three screws **2** to lift the fan assembly.

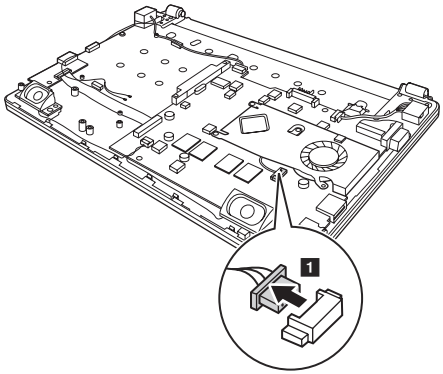

Figure 7. Removal steps of fan assembly and heat sink assembly (continued)

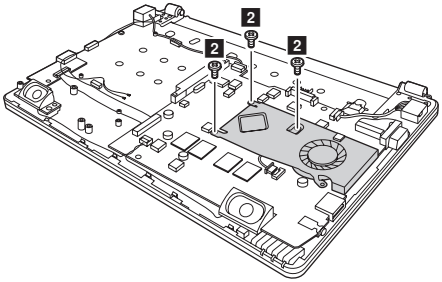

Step	Screw (quantity)	Color	Torque	P/N
2	M2 × 3 mm, flat-head, nylok-coated (3)	Black	1.85+/-0.15kgfcm	90205491

1080 System board

Important notices for handling the system board:

When handling the system board, bear the following in mind.

- Be careful not to drop the system board on a bench top that has a hard surface, such as metal, wood, or composite.
- Avoid rough handling of any kind.
- In the whole process, make sure not to drop or stack the system board.
- If you put a system board down, make sure to put it only on a padded surface such as an ESD mat or conductive corrugated material.

For access, remove these FRUs in order:

- "1010 Battery pack" on page 34
- "1020 Dummy card" on page 35
- "1030 Keyboard" on page 36
- "1040 Hard disk drive(HDD)/Memory/Mini PCI Express Card slot compartment cover" on page 38
- "1050 Hard disk drive" on page 40
- "1060 PCI Express Mini Card for wireless LAN/WAN" on page 42
- "1070 Fan assembly and Heat Sink assembly" on page 44

Figure 8. Removal steps of system board

Loosen three screws 1 . Detach LCD connector in the direction shown by arrow 2 , USB connector in the direction shown by arrows 5 and 6 , unplug power assembly connector in the direction shown by arrow 3 , RJ 45 port connector in the direction shown by arrow 4 , speakers connectors in the direction shown by arrow 7 .

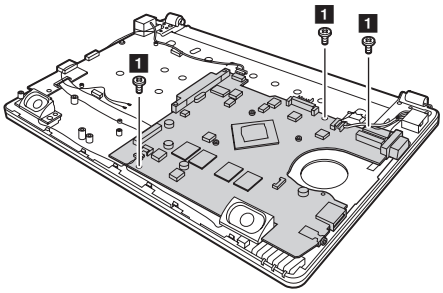

Step	Screw (quantity)	Color	Torque
1	M2 × 3 mm, flat-head, nylok-coated (3)	Black	1.85+/-0.15 kgfcm

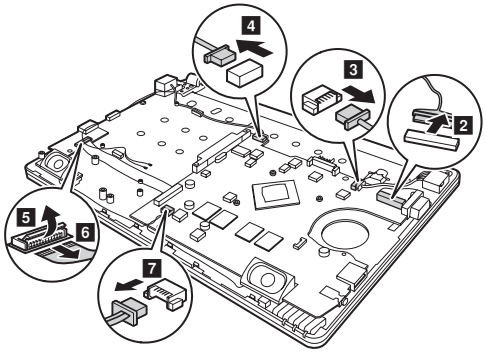

Figure 8. Removal steps of system board (continued)

Detach the touch pad connector in the directions shown by arrows 8 and 9 .

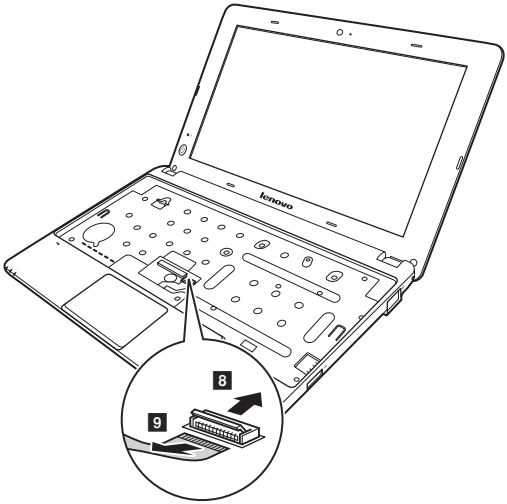

When installing: Make sure that all the connectors are attached firmly.

Remove the system board in the direction shown by arrow 10.

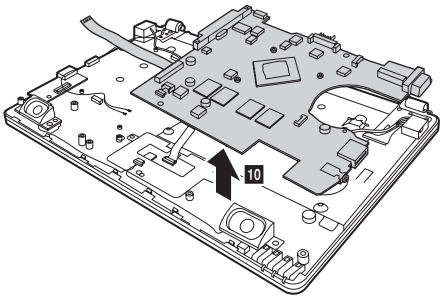

1090 LCD unit

For access, remove these FRUs in order:

- “1010 Battery pack” on page 34
- “1020 Dummy card” on page 35
- “1030 Keyboard” on page 36
- “1040 Hard disk drive(HDD)/Memory/Mini PCI Express Card slot compartment cover” on page 38
- “1050 Hard disk drive” on page 40
- “1060 PCI Express Mini Card for wireless LAN/WAN” on page 42
- “1070 Fan assembly and Heat Sink assembly” on page 44
- “1080 System board” on page 46

Figure 9. Removal steps of LCD unit

Remove two screws **1** .

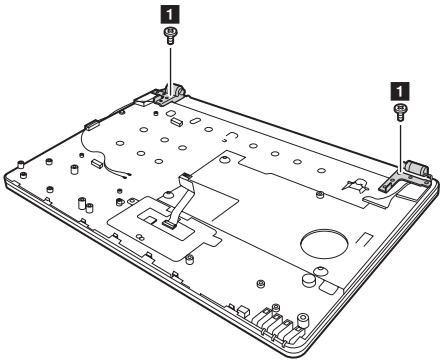

Step	Screw (quantity)	Color	Torque	P/N
1	M2 × 5 mm flat-head, nylok-coated (2)	Black	1.85+/-0.15 kgfcm	90205493

When installing:

- Route the antenna cables along the cable guides. As you route the cables, make sure that they are not subjected to any tension. Tension could cause the cables to be damaged by the cable guides, or a wire to be broken.
- Make sure that the LCD connector is attached firmly and make sure that you do not pinch the antenna cables when you attach the LCD assembly. Route the LCD cable along the cable guides.

Figure 9. Removal steps of LCD unit (continued)

Remove the LCD unit in the direction shown by arrow **2**.

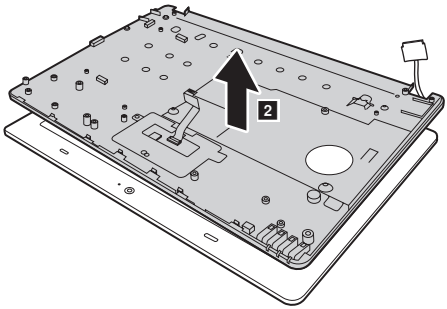

1100 Base cover, speakers, power assembly and USB board

For access, remove these FRUs in order:

- "1010 Battery pack" on page 34
- "1020 Dummy card" on page 35
- "1030 Keyboard" on page 36
- "1040 Hard disk drive(HDD)/Memory/Mini PCI Express Card slot compartment cover" on page 38
- "1050 Hard disk drive" on page 40
- "1060 PCI Express Mini Card for wireless LAN/WAN" on page 42
- "1070 Fan assembly and Heat Sink assembly" on page 44
- "1080 System board" on page 46
- "1090 LCD unit" on page 49

Figure 10. Removal steps of base cover, speakers, power assembly and USB board

Loosen four screws 1 , and then remove the speakers in the direction shown by arrows 2 .

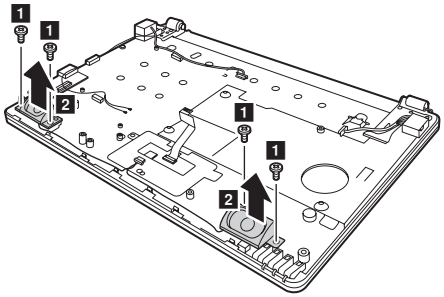

Step	Screw (quantity)	Color	Torque
1	M2 ×3 mm, flat-head, nylok-coated (4)	Black	1.85+/-0.15kgfcm

Figure 10. Removal steps of base cover, speakers, power assembly and USB board (continued)

Remove the power assembly in the direction shown by arrow **3**.

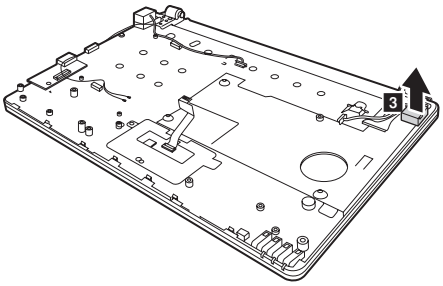

When installing: Make sure that the power connector is attached firmly.

Remove the screw **4**. Remove the USB board in the direction shown by arrow **5**.

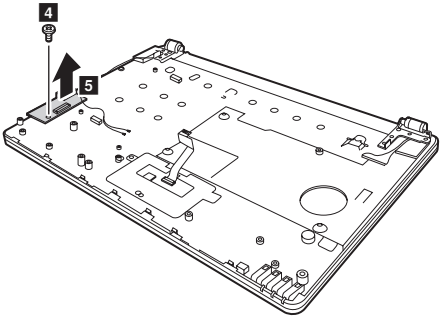

Step	Screw (quantity)	Color	Torque
1	M2.0 × 3 mm, flat-head, nylok-coated (1)	Black	1.85+/-0.15kgfcm

Note: Applying labels to the base cover

The new base cover FRU is shipped with a kit containing labels of several kinds. When you replace the base cover, you need to apply the following label:

The following labels need to be peeled off from the old base cover, and need to be put on the new base cover.

- a COA Label
- b Indonesia D Side Label
- c PRC CORD label
- d Bluetooth label
- e Rating Label
- f Rating Label for print
- g WLAN label

For some models, you also need to apply one or two FCC labels. Check the old base cover; if it has one or two FCC labels, find duplicates of them in the label kit and apply them to the new base cover.

For the location of each label, refer to the following figure:

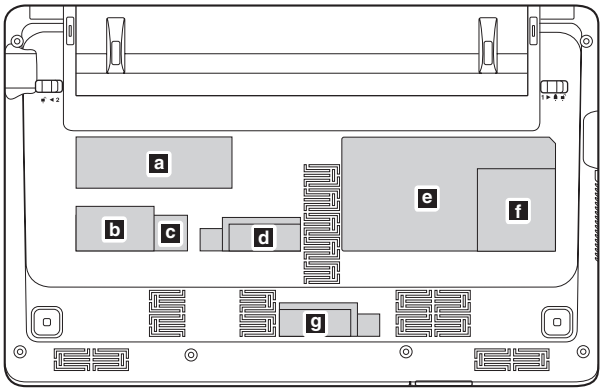

1110 LCD front bezel

For access, remove these FRUs in order:

- "1010 Battery pack" on page 34
- "1020 Dummy card" on page 35
- "1030 Keyboard" on page 36
- "1040 Hard disk drive(HDD)/Memory/Mini PCI Express Card slot compartment cover" on page 38
- "1050 Hard disk drive" on page 40
- "1060 PCI Express Mini Card for wireless LAN/WAN" on page 42
- "1070 Fan assembly and Heat Sink assembly" on page 44
- "1080 System board" on page 46
- "1090 LCD unit" on page 49
- "1100 Base cover, speakers, power assembly and USB board" on page 51

Figure 11. Removal steps of LCD front bezel

Remove LCD bezel screw pad 1 and the screws 2 .

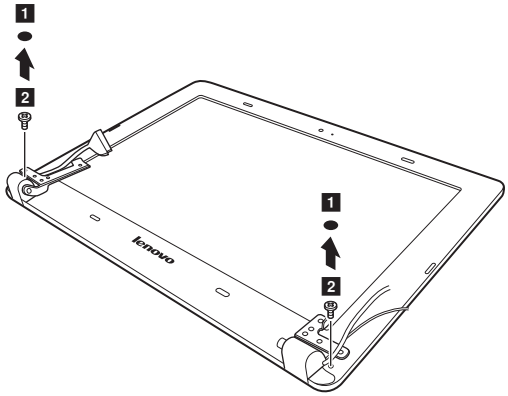

Step	Screw (quantity)	Color	Torque
1	M2.0 × 3 mm, flat-head, nylok-coated (2)	Black	1.85+/-0.15 kgfcm

Figure 11. Removal steps of LCD front bezel (continued)

Remove the LCD front bezel in the direction shown by arrows **3**.

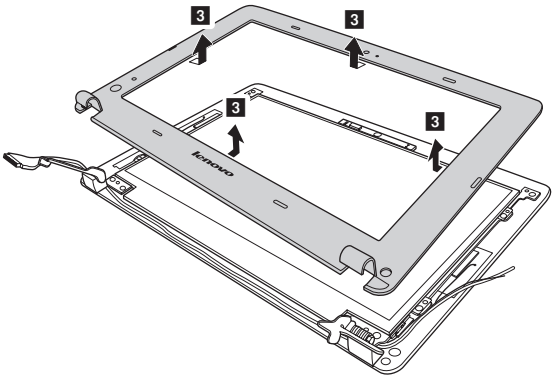

1120 LCD panel, LCD cable and hinges

For access, remove these FRUs in order:

- "1010 Battery pack" on page 34
- "1020 Dummy card" on page 35
- "1030 Keyboard" on page 36
- "1040 Hard disk drive(HDD)/Memory/Mini PCI Express Card slot compartment cover" on page 38
- "1050 Hard disk drive" on page 40
- "1060 PCI Express Mini Card for wireless LAN/WAN" on page 42
- "1070 Fan assembly and Heat Sink assembly" on page 44
- "1080 System board" on page 46
- "1090 LCD unit" on page 49
- "1100 Base cover, speakers, power assembly and USB board" on page 51
- "1110 LCD front bezel" on page 54

Figure 12. Removal steps of LCD panel, LCD cable and hinges

Remove four screws 1. Lift the LCD panel in the direction shown by arrows 2.

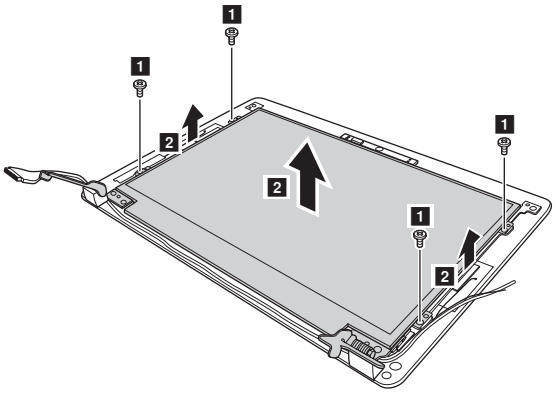

When installing: Make sure that the connector is attached firmly.

Step	Screw (quantity)	Color	Torque
1	M2.0 × 3 mm, flat-head, nylok-coated (4)	Black	1.85 +/- 0.15 kgfcm

Figure 12. Removal steps of LCD panel, LCD cable and hinges (continued)

Remove six screws **3** . Lift the LCD hinges in the direction shown by arrows **4** .

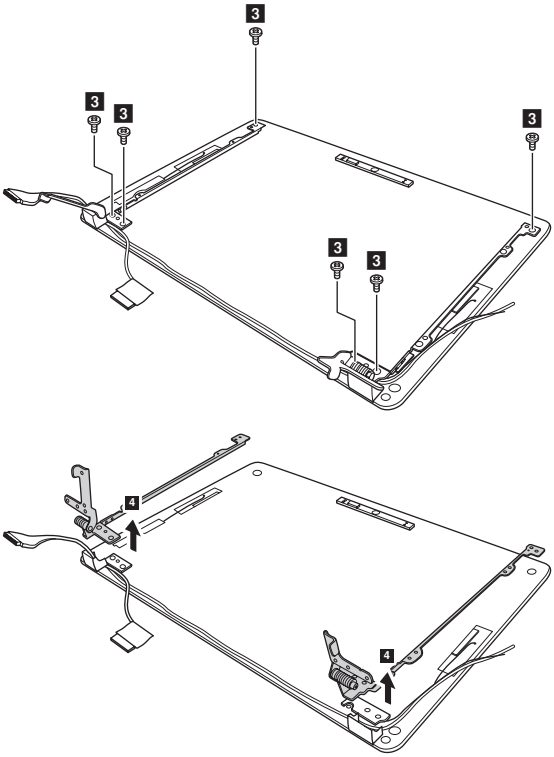

Step	Screw (quantity)	Color	Torque
4	M2.0 × 3 mm, flat-head, nylok-coated (4)	Black	1.85+/-0.15 kgfcm

Figure 12. Removal steps of LCD panel, LCD cable and hinges (continued)
Note: The LCD cables are attached to the LCD panel by a metal connector.

Peel off the adhesive tape and detach the connector in the direction shown by arrow **5** .

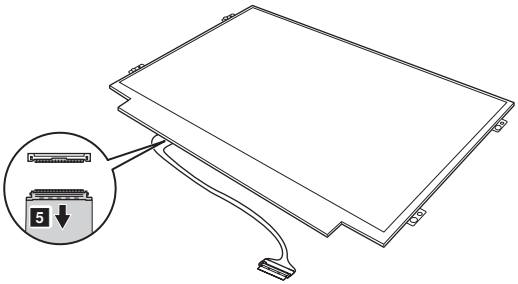

When installing: Make sure that the metal connector is attached firmly.

1130 Integrated camera and power switch board

For access, remove these FRUs in order:

- "1010 Battery pack" on page 34
- "1020 Dummy card" on page 35
- "1030 Keyboard" on page 36
- "1040 Hard disk drive(HDD)/Memory/Mini PCI Express Card slot compartment cover" on page 38
- "1050 Hard disk drive" on page 40
- "1060 PCI Express Mini Card for wireless LAN/WAN" on page 42
- "1070 Fan assembly and Heat Sink assembly" on page 44
- "1080 System board" on page 46
- "1090 LCD unit" on page 49
- "1100 Base cover, speakers, power assembly and USB board" on page 51
- "1110 LCD front bezel" on page 54
- "1120 LCD panel, LCD cable and hinges" on page 56

Figure 13. Removal steps of integrated camera and power switch board

Note: The integrated camera is stuck on the top center of the LCD cover.

Unplug the integrated camera connector in the direction shown by arrow **1**.

Remove the integrated camera from the LCD cover **2**.

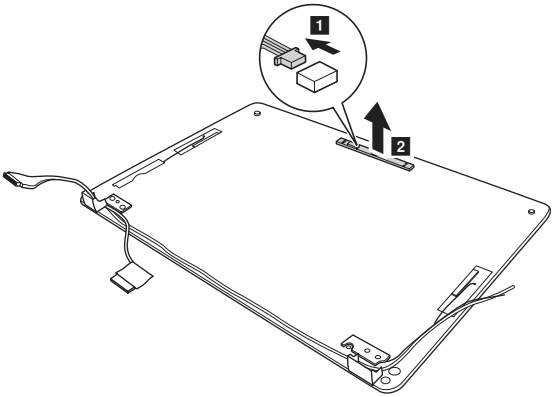

When installing: Stick the integrated camera to the top center of the LCD cover and adjust the placement of it to make sure the connector is attached firmly.

Figure 13. Removal steps of integrated camera and power switch board (continued)

Unplug the power switch board connector in the direction shown by arrow **1**.
Remove the power switch board from the LCD cover **2**.

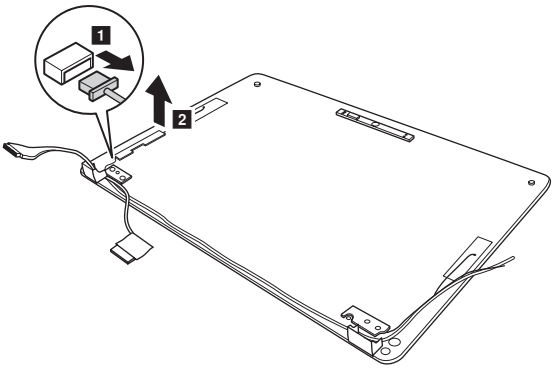

1140 Antenna assembly and LCD cover

For access, remove these FRUs in order:

- "1010 Battery pack" on page 34
- "1020 Dummy card" on page 35
- "1030 Keyboard" on page 36
- "1040 Hard disk drive(HDD)/Memory/Mini PCI Express Card slot compartment cover" on page 38
- "1050 Hard disk drive" on page 40
- "1060 PCI Express Mini Card for wireless LAN/WAN" on page 42
- "1070 Fan assembly and Heat Sink assembly" on page 44
- "1080 System board" on page 46
- "1090 LCD unit" on page 49
- "1100 Base cover, speakers, power assembly and USB board" on page 51
- "1110 LCD front bezel" on page 54
- "1120 LCD panel, LCD cable and hinges" on page 56

Figure 14. Removal steps of antenna assembly and LCD cover

Peel off the adhesive tapes securing the antenna boards, release the cables from the cable guide, and then remove the antenna assembly in the direction shown by arrows **1**.

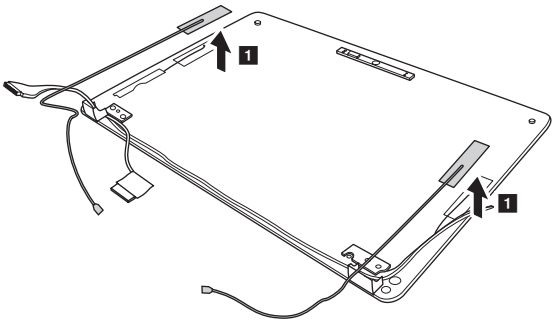

When installing: Route the antenna cables along the cable guides and secure the antenna boards with adhesive tapes. As you route the cables, make sure that they are not subjected to any tension. Tension could cause the cables to be damaged by the cable guides, or a wire to be broken.

Locations

Front view

1. Integrated camera
2. Wireless antennas
3. Display
4. Novo button
5. Power button
6. Built-in microphone
7. System indicators
8. Touch pad
9. Touch pad buttons
10. Memory card slot

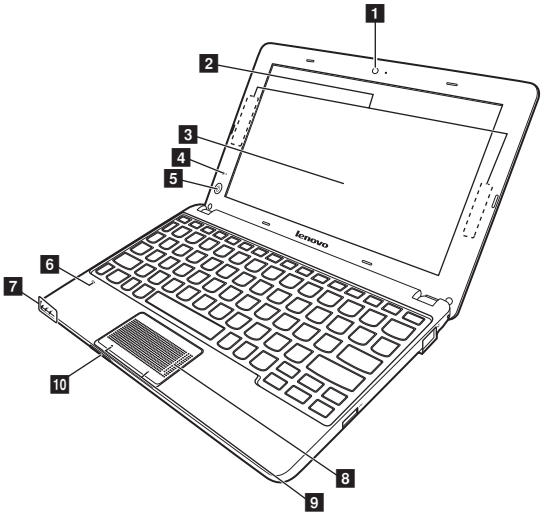

Right-side view

1 USB port
2 RJ-45 port

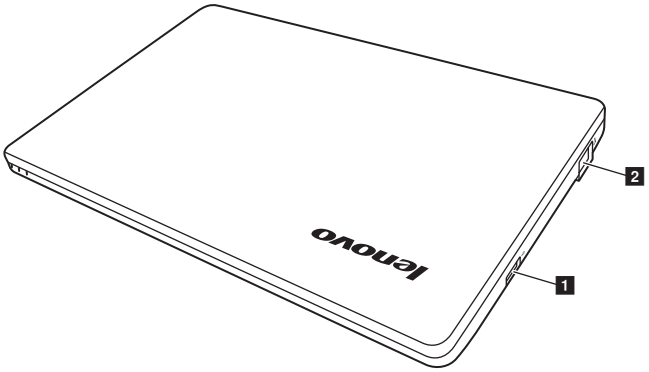

Bottom and Left-side view

1. AC power adapter jack
2. VGA port
3. Ventilation slots
4. USB 3.0 ports
5. Combo audio jack
6. Battery latch - manual
7. Battery pack
8. Battery latch - spring loaded
9. Ventilation slots
10. Speakers

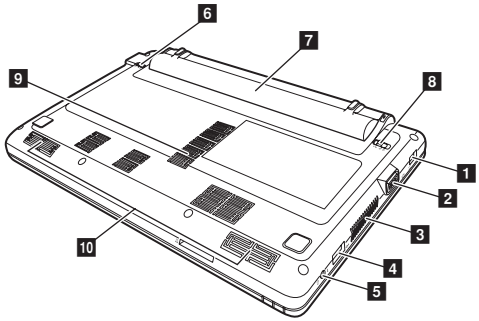

Parts list

This section presents the following service parts:

- "Overall" on page 66
- "LCD FRUs" on page 70
- "Keyboard" on page 72
- "Miscellaneous parts" on page 76
- "AC adapters" on page 77
- "Power cords" on page 78

Notes:
- Each FRU is available for all types or models, unless specific types or models are specified.

Overall

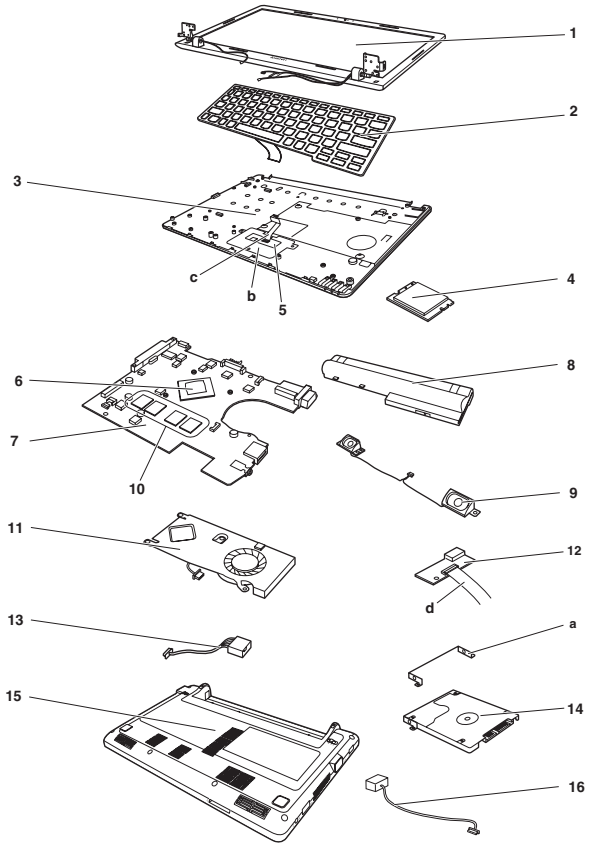

Table 4. Parts list—Overall

No.	FRU	FRU no.	CRU ID
1	LCD unit (see “LCD FRUs” on page 70.)		
2	Keyboard (see “Keyboard” on page 72.)		
3	E10-30 Upper Case BK	90205446	N
3	E10-30 Upper Case White	90205450	N
4	WirelessLan_Intel, Intel 3160 1x1AC+BT PCIE NGFF WLAN, INTEL 3160 1X1 AC+BT4.0, Intel 1x1 AC wifi+ BT4.0 Combo(support WIDI)	20200418	N
4	WirelessLan_Non_Intel, Ltn HFA335 1x1BN+BT4.0 PCIE M.2 WLAN, NON-INTEL 1X1 BGN+BT4.0, WiFi 1x1 BGN+BT4.0 Combo	20200558	N
4	WirelessLan_Non_Intel, Cbt BCM43142 1x1BN+BT4.0 PCIE M.2 WLAN, NON-INTEL 1X1 BGN+BT4.0, WiFi 1x1 BGN+BT4.0 Combo	20200557	N
4	WirelessLan_Non_Intel, Cbt RTL8723BE 1x1BN+BT4.0 PCIE M.2 WLAN, NON-INTEL 1X1 BGN+BT4.0, WiFi 1x1 BGN+BT4.0 Combo	20200570	N
5	E10-30 Touchpad Module BK	90007311	N
5	E10-30 Touchpad Module White	90007312	N
6	Intel N3520 2.17G 2M B3 4cBGA CPU, Baytrial	102500678	N
6	Intel N2920 1.86G 2M B3 4cBGA CPU, Baytrial	102500679	N
6	Intel N2815 1.86G 1M B3 2cBGA CPU, Baytrial	102500681	N
6	Intel N2806 1.6G 1M B3 2cBGA CPU, Baytrial	102500682	N
7	E10-30 MB N3520 2G	90007285	N
7	E10-30 MB W8S N3520 2G	90007286	N
7	E10-30 MB W8P N3520 2G	90007287	N
7	E10-30 MB N3520 4G	90007288	N
7	E10-30 MB W8S N3520 4G	90007289	N
7	E10-30 MB W8P N3520 4G	90007290	N
7	E10-30 MB N2920 2G	90007291	N
7	E10-30 MB W8S N2920 2G	90007292	N
7	E10-30 MB W8P N2920 2G	90007293	N
7	E10-30 MB N2920 4G	90007294	N
7	E10-30 MB W8S N2920 4G	90007295	N
7	E10-30 MB W8P N2920 4G	90007296	N
7	E10-30 MB N2815 2G	90007297	N
7	E10-30 MB W8S N2815 2G	90007298	N
7	E10-30 MB W8P N2815 2G	90007299	N
7	E10-30 MB N2815 4G	90007300	N
7	E10-30 MB W8S N2815 4G	90007301	N
7	E10-30 MB W8P N2815 4G	90007302	N
7	E10-30 MB N2806 2G	90007303	N
7	E10-30 MB W8S N2806 2G	90007304	N
7	E10-30 MB W8P N2806 2G	90007305	N
7	E10-30 MB N2806 4G	90007306	N
7	E10-30 MB W8S N2806 4G	90007307	N
7	E10-30 MB W8P N2806 4G	90007308	N

Table 4. Parts list—Overall (continued)

No.	FRU	FRU no.	CRU ID
8	Battery S100 SMP/S L10M3Z11 3S1P 24Wh white Bty 3CELL 24WH	121001124	N
8	Battery S100 Celx/L L10C3Z11 3S1P 24Wh whiteBty 3CELL 24WH	121001128	N
8	Battery S100 SMP/S L10M6Y12 3S2P 48Wh white Bty 6CELL 48WH	121001142	N
8	Battery S100 Celx/L L10C6Y12 3S2P 48Wh whiteBty 6CELL 48WH	121001126	N
8	Battery S100 SP/S L10M3Z11 11.1V24Wh 3cellBty EU 3CELL 24WH	121500100	N
8	Battery S100 Celx/L L10C3Z11 3S1P 24Wh blackBty 3CELL 24WH 3 cell 2200 Ah	121001129	N
8	Battery S100 SP/S L10M6Y12 11.1V48Wh 6cellBty EU 6CELL 48WH	121500101	N
8	Battery S100 Celx/L L10C6Y11 3S2P 48Wh blackBty 3CELL 24WH 3 cell 2200 Ah	121001127	N
9	E10-30 Speaker	90205460	N
10	H5TC4G63AFR-PBA(D/4Gb/29nm) 2G(1*2GBDDRIIIL1066),2G(1*2GBDDRIIIL1333), 4Gb x16 DDR3L 1600 SDRAM	1100847	N
10	MT41K256M16HA-125:E(V80A/4Gb/30nm) 2G(1*2GBDDRIIIL1066),2G(1*2GBDDRIIIL1333), 4Gb x16 DDR3L 1600 SDRAM	1100828	N
10	K4B4G1646Q-HYK0(Q/4Gb/35nm) 2G(1*2GBDDRIIIL1066),2G(1*2GBDDRIIIL1333), 4Gb x16 DDR3L 1600 SDRAM	1100918	N
10	EDJ4216EFBG-GN-F(F/4Gb/30nm) 2G(1*2GBDDRIIIL1066),2G(1*2GBDDRIIIL1333), 4Gb x16 DDR3L 1600 SDRAM	1100848	N
10	H5TC8G63AMR-PBA (D/4Gb/29nm/DDP) 4G(1*4GBDDRIIIL1066),4G(1*4GBDDRIIIL1333), 8Gb x16 DDR3L 1600 SDRAM	1100920	N
10	MT41K512M16TNA-125:E(V80A/4Gb/30nm/DDP) 4G(1*4GBDDRIIIL1066), 4G (1*4GBDDRIIIL1333), 8Gb x16 DDR3L 1600 SDRAM	1100851	N
10	K4B8G1646Q-MYK0(Q/4Gb/35nm/DDP) 4G(1*4GBDDRIIIL1066),4G(1*4GBDDRIIIL1333), 8Gb x16 DDR3L 1600 SDRAM	1100919	N
10	EDJ8416E6MB-GN-F(F/4Gb/30nm/DDP) 4G(1*4GBDDRIIIL1066),4G(1*4GBDDRIIIL1333), 8Gb x16 DDR3L 1600 SDRAM	1100850	N
11	E10-30 Thermal Module	90205454	N
12	E10-30 USB Board	90007310	N
13	E10-30 DC-IN Cable	90205462	N
14	HDD, ST320LT012 6G 7mm 5.4K 320G HDD 320G 5400rpm	16200384	N

Table 4. Parts list—Overall (continued)

No.	FRU	FRU no.	CRU ID
14	HDD, TSB MQ01ABF032 6G 7mm 5.4K 320G HDD 320G 5400rpm	16200434	N
14	HDD, WD3200LPCX-24C6HT0 6G 7mm 5.4K 320G HDD 320G 5400rpm	16200551	N
14	HDD, HTS545032A7E660 6G 7mm 5.4K 320G HDD 320G 5400rpm	16200405	N
14	HDD, ST500LT012 6G 7mm 5.4K 500G HDD 500G 5400rpm	16200383	N
14	HDD, WD5000LPCX-24C6HT0 6G 7mm 5.4K 500G HDD 500G 5400rpm	16200395	N
14	HDD, TSB MQ01ABF050 6G 7mm 5.4K 500G HDD 500G 5400rpm	16200433	N
14	HDD, HTS545050A7E660 6G 7mm 5.4K 500G HDD 500G 5400rpm	16200404	N
14	HDD, ST500LM012 6G 9.5mm 5.4K 500G HDD 500G 5400rpm	16200387	N
15	E10-30 Lower Case BK	90205447	N
16	E10-30 RJ45 Cable	90205457	N

LCD FRUs

In Lenovo E10-30, there are following types of LCDs.

- "10.1-in. HD TFT" E10-30

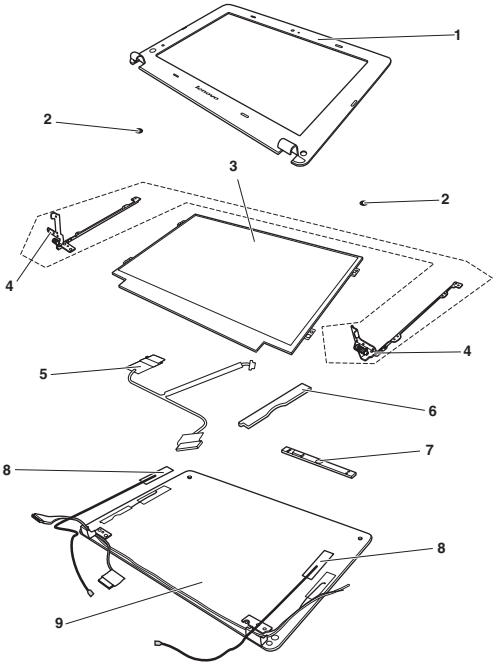

10.1-in. HD TFT (E10-30)

Table 5. Parts list—10.1-in. HD TFT

No.	FRU	FRU no.	CRU ID
1	E10-30 LCD Bezel BK	90205445	N
1	E10-30 LCD Bezel White	90205449	N
2	LCD Bezel Screw Pad	90205459	N
3	Panel, IVO M101NWN8 R0 HD AG F LED1 NB LCD, 10.1 HD LED ANTI-GLARE, 10.1" Panel 16:9, TN, 1366*768	18201245	N
3	Panel, AUO B101XTN01.1 1A HD AG F LED1 NB LCD, 10.1 HD LED ANTI-GLARE, 10.1" Panel 16:9, TN, 1366*768	18201246	N
3	Panel, CMI N101BGE L31 HD AG F LED1 NB LCD, 10.1 HD LED ANTI-GLARE, 10.1" Panel 16:9, TN, 1366*768	18201636	N
4	E10-30 Hinge	90205451	N
5	E10-30 LCD Cable& Camera Cable	90205452	N
6	E10-30 Power Switch Board	90007309	N
7	E10-30 Camera 1M	90205503	N
7	E10-30 Camera 0.3M	90205504	N
8	E10-30 Antenna	90205458	N
9	E10-30 LCD Cover BK	90205444	N
9	E10-30 LCD Cover White	90205448	N

Keyboard

Table 6. Parts list—Keyboard

Language			P/N	CRU ID
E10-30	Chicony (Black)	English	25216103	**
		U.K. English	25216104	**
		Italian	25216105	**
		Spanish	25216106	**
		Turkish	25216107	**
		Thai	25216108	**
		Portuguese	25216109	**
		Latin	25216110	**
		Canadian English&French	25216111	**
		Korean	25216112	**
		Traditional Chinese	25216113	**
		Russian	25216114	**
		French	25216115	**
		German	25216116	**
		Arabic	25216117	**
		Brazilian	25216118	**
		Japanese	25216119	**
		Dutch	25216120	**
		Greek	25216121	**
		Hebrew	25216122	**
		Hungarian	25216123	**
		Four Nordic countries	25216124	**
		Belgian	25216125	**
		Icelandic	25216126	**
		Slovenian	25216127	**
		Swiss	25216128	**
		International English	25216129	**
		Czechoslovakian	25216130	**
		Bulgarian	25216131	**
		Indian	25216132	**

Table 6. Parts list—Keyboard

Language			P/N	CRU ID
E10-30 (continued)	Sunrex (Black)	English	25216133	**
		U.K. English	25216134	**
		Italian	25216135	**
		Spanish	25216136	**
		Turkish	25216137	**
		Thai	25216138	**
		Portuguese	25216139	**
		Latin	25216140	**
		Canadian English&French	25216141	**
		Korean	25216142	**
		Traditional Chinese	25216143	**
		Russian	25216144	**
		French	25216145	**
		German	25216146	**
		Arabic	25216147	**
		Brazilian	25216148	**
		Dutch	25216149	**
		Greek	25216150	**
		Hebrew	25216151	**
		Hungarian	25216152	**
		Four Nordic countries	25216153	**
		Belgian	25216154	**
		Icelandic	25216155	**
		Slovenian	25216156	**
		Swiss	25216157	**
		International English	25216158	**
		Czechoslovakian	25216159	**
		Bulgarian	25216160	**
		Indian	25216161	**

Table 6. Parts list—Keyboard

Language			P/N	CRU ID
E10-30 (continued)	Chicony (White)	English	25216162	**
		U.K. English	25216163	**
		Italian	25216164	**
		Spanish	25216165	**
		Turkish	25216166	**
		Thai	25216167	**
		Portuguese	25216168	**
		Latin	25216169	**
		Canadian English&French	25216170	**
		Korean	25216171	**
		Traditional Chinese	25216172	**
		Russian	25216173	**
		French	25216174	**
		German	25216175	**
		Arabic	25216176	**
		Brazilian	25216177	**
		Japanese	25216178	**
		Dutch	25216179	**
		Greek	25216180	**
		Hebrew	25216181	**
		Hungarian	25216182	**
		Four Nordic countries	25216183	**
		Belgian	25216184	**
		Icelandic	25216185	**
		Slovenian	25216186	**
		Swiss	25216187	**
		International English	25216188	**
		Czechoslovakian	25216189	**
		Bulgarian	25216190	**
		Indian	25216191	**

Table 6. Parts list—Keyboard

Language			P/N	CRU ID
E10-30 (continued)	Sunrex (White)	English	25216192	**
		U.K. English	25216193	**
		Italian	25216194	**
		Spanish	25216195	**
		Turkish	25216196	**
		Thai	25216197	**
		Portuguese	25216198	**
		Latin	25216199	**
		Canadian English&French	25216200	**
		Korean	25216201	**
		Traditional Chinese	25216202	**
		Russian	25216203	**
		French	25216204	**
		German	25216205	**
		Arabic	25216206	**
		Brazilian	25216207	**
		Dutch	25216208	**
		Greek	25216209	**
		Hebrew	25216210	**
		Hungarian	25216211	**
		Four Nordic countries	25216212	**
		Belgian	25216213	**
		Icelandic	25216214	**
		Slovenian	25216215	**
		Swiss	25216216	**
		International English	25216217	**
		Czechoslovakian	25216218	**
		Bulgarian	25216219	**
		Indian	25216220	**

Miscellaneous parts

Table 7. Parts list—Miscellaneous parts

FRU	P/N	CRU ID
System miscellaneous parts: • (a) E10-30 HDD Bracket • (b) E10-30 Touchpad Bracket	 90205453 90205461	N
Cable miscellaneous parts: • (c) E10-30 Touchpad Module • (d) E10-30 USB Cable **Note:** Italicized letters in parentheses are references to the exploded view in "Overall" on page 71.	 90205456 90205455	N

Screw

Table 8. Parts list—screws

FRU	P/N	CRU ID
E10-30 Screw ϕ4×H0.5mm M2×3mm +NYLOK	90205491	N
E10-30 Screw ϕ4.0×H0.8mm M2×6mm +NYLOK	90205492	
E10-30 Screw ϕ4.0mm×H0.6mm M2×5mm +NYLOK	90205493	
E10-30 Screw ϕ5.0×H0.3mm M3×3mm +NYLOK	90205494	
E10-30 Screw 5.0×H0.3mm M2×1.7mm +NYLOK	90205495	

AC adapters

Table 9. Parts list—3-pin AC adapters

FRU	P/N	CRU ID
45W(3pin), Delta ADLX45NDC3A 20V2.25A adapter Delta BLACK	36200602	N
45W(3pin), Liteon ADLX45NLC3A 20V2.25A adapter Liteon BLACK	36200606	N
45W(3pin), Chicony ADLX45NCC3A 20V2.25A adapter Chicony BLACK	36200610	N

Power cords

A Lenovo power cord for a specific country or region is usually available only in that country or region:

Table 10. Parts list—3-pin power cords

Region	P/N	CRU ID
CCC • LINETEK PC323+RVV300/300+LS15 1m	145000600	*
Argentina • LINETEK LS15+H03VV-F+LP39 1m	145000599	*
Denmark • LINETEK LS15+H03VV-F+LP-38 1m	145000598	*
Switzerland • LINETEK LS15+H03VV-F+LP-37 1m	145000597	*
Brazil • LINETEK LS15 H03VV-F LP26A 1m	145000596	*
Israel • LINETEK LS15+H03VV-F+LP-41 1m	145000595	*
UL • LINETEK LP-30B + SPT-2 + LS15 1m	145000594	*
UK • LINETEK LP-61L+ H03VV-F+ LS15 1m	145000593	*
Indian • LINETEK PE-361+ H05VV-F+ LS15 1m	145000592	*
Italy • LINETEK LS15+H03VV-F+PE-336 1m	145000591	*
Korea • LINETEK LS15+H05VV-F+LP-E04A 1m	145000590	*
Australia • LINETEK LS15+H03VV-F+LP-23A 1m	145000589	*
Taiwan • LINETEK LS15+VCTF+LP-53 1m	145000588	*
Japan • LINETEK LS15+VCTF+LP-54 1m	145000587	*
Africa • LINETEK LS15+H03VV-F+PE-364 1m	145000586	*
CE • LINETEK LP-34+H03VV-F + LS15 1m	145000585	*
CCC • Longwell LSG-31+RVV300/300+LS-18 1m	145000568	
Argentina • Longwell LP-24+H03VV-F+LS-18 1m	145000567	*
Denmark • Longwell LP-40+H03VV-F+LS-18 1m	145000566	*
Switzerland • Longwell LP-37+H03VV-F+LS-18 1m	145000565	*

Table 10. Parts list—3-pin power cords (continued)

Region	P/N	CRU ID
Brazil • Longwell LP-46+H03VV-F+LS-18 1m	145000564	*
Israel • Longwell LP-41+H03VV-F+LS-18 1m	145000563	*
UL • Longwell LP-30B+SPT-2 18AWG+LS-18 1m	145000562	*
UK • Longwell LP-61L+H03VV-F+LS-18 1m	145000561	*
Indian • Longwell LP-67+BIS+LS-18 1m	145000560	*
Italy • Longwell LP-22+H03VV-F+LS-18 1m	145000559	*
Korea • Longwell LP-486+KTLH03VV-F+LS-5 1m	145000558	*
Australia • Longwell LP-23A+LFC-3R+LS-18 1m	145000557	*
Taiwan • Longwell LP-71+VCTF+LS-33 1m	145000556	*
Japan • Longwell LP-54+VCTF+LS-18 1m	145000555	*
Africa • Longwell LP-39+H03VV-F+LS-18 1m	145000554	*
CE • Longwell LP-34A+H03VV-F+LS-18 1m	145000553	*
CCC • VOLEX GB10S3+RVV 300/500+VAC5S 1m	145000538	*
Argentina • VOLEX VA2073+H03VV-F+VAC5S 1m	145000528	*
Denmark • VOLEX MP233D+H03VV-F+VAC5S 1m	145000534	*
Switzerland • VOLEX MP232+H03VV-F+VAC5S 1m	145000524	*
Brazil • VOLEX CH10S3+H03VV-F+VAC5S 1m	145000527	*
Israel • VOLEX SI16S3+H03VV-F+VAC5S 1m	145000526	*
UL • Volex US15S3+SPT-2+VAC5S 1m	145000537	*
UK • VOLEX MP5004+H03VV-F+VAC5S 1m	145000605	*
Italy • VOLEX IT10S3+HO3VV-F+VAC5S 1m	145000535	*

Table 10. Parts list—3-pin power cords (continued)

Region	P/N	CRU ID
Korea • VOLEX M2511+KETI IEC+VAC5S 1m	145000533	*
Australia • VOLEX AU10S3+H03VV-F+VAC5S 1m	145000532	*
Taiwan • VOLEX TW15CS3+VCTF+VAC5S 1m	145000531	*
Japan • VOLEX VAC5S+VCTF+M755 1m	145000530	*
CE • VOLEX M2511+HO3VV-F+VAC5S 1m	145000525	*
UK • lux 0031+H03VV-F 0.75/3C+0011 1m	145500000	*
CE • lux 0033+H03VV-F 0.75/3C+0011 1m	145500001	*
UL • lux 0014+SPT-2 60°C 18/3C+0016 1m	145500002	*
CCC • lux 0036+RVV 300/300 0.75/3C+0002 1m	145500003	*
Japan • lux 0018(E)+VCTF 0.75/3C+0021 1m	145500005	*
Australia • lux 0038+H03VV-F 0.75/3C+0011 1m	145500006	*
Taiwan • lux 0019+VCTF 0.75/3C+0021 1m	145500007	*
Korea • lux 0033+H03VV-F 0.75/3C+0011 1m	145500008	*
Italy • lux 0029+H03VV-F 0.75/3C+0011 1m	145500009	*
Africa • lux 0044+H03VV-F 0.75/3C+0011 1m	145500010	*
Brazail • lux 0034+H03VV-F 0.75/3C+0011 1m	145500011	*
Israel • lux 0041+H03VV-F 0.75/3C+0011 1m	145500012	*
Switzerland • lux 0027+H03VV-F 0.75/3C+0011 1m	145500013	*
Denmark • lux 0048+H03VV-F 0.75/3C+0011 1m	145500014	*
Argentina • lux 0040+H03VV-F 0.75/3C+0011 1m	145500015	*

Notices

Lenovo may not offer the products, services, or features discussed in this document in all countries. Consult your local Lenovo representative for information on the products and services currently available in your area. Any reference to a Lenovo product, program, or service is not intended to state or imply that only that Lenovo product, program, or service may be used. Any functionally equivalent product, program, or service that does not infringe any Lenovo intellectual property right may be used instead. However, it is the user's responsibility to evaluate and verify the operation of any other product, program, or service.

Lenovo may have patents or pending patent applications covering subject matter described in this document. The furnishing of this document does not give you any license to these patents.

LENOVO GROUP LTD. PROVIDES THIS PUBLICATION "AS IS" WITHOUT WARRANTY OF ANY KIND, EITHER EXPRESS OR IMPLIED, INCLUDING, BUT NOT LIMITED TO, THE IMPLIED WARRANTIES OF NON-INFRINGEMENT, MERCHANTABILITY OR FITNESS FOR A PARTICULAR PURPOSE. Some jurisdictions do not allow disclaimer of express or implied warranties in certain transactions, therefore, this statement may not apply to you.

This information could include technical inaccuracies or typographical errors. Changes are periodically made to the information herein; these changes will be incorporated in new editions of the publication. Lenovo may make improvements and/or changes in the product(s) and/or the program(s) described in this publication at any time without notice.

The products described in this document are not intended for use in implantation or other life support applications where malfunction may result in injury or death to persons. The information contained in this document does not affect or change Lenovo product specifications or warranties. Nothing in this document shall operate as an express or implied license or indemnity under the intellectual property rights of Lenovo or third parties. All information contained in this document was obtained in specific environments and is presented as an illustration. The result obtained in other operating environments may vary.

Lenovo may use or distribute any of the information you supply in any way it believes appropriate without incurring any obligation to you.

Any references in this publication to non-Lenovo Web sites are provided for convenience only and do not in any manner serve as an endorsement of those Web sites. The materials at those Web sites are not part of the materials for this Lenovo product, and use of those Web sites is at your own risk.

Any performance data contained herein was determined in a controlled environment. Therefore, the result obtained in other operating environments may vary significantly. Some measurements may have been made on development-level systems and there is no guarantee that these measurements will be the same on generally available systems. Furthermore, some measurements may have been estimated through extrapolation. Actual results may vary. Users of this document should verify the applicable data for their specific environment.

Trademarks

The following terms are trademarks or registered trademarks of Lenovo in the United States, other countries, or both.

Lenovo
OneKey

Microsoft and Windows are trademarks of Microsoft Corporation in the United States, other countries, or both.

Other company, products, or service names may be trademarks or service marks of others.